WORLD HERITAGE CENTER

95% CONSTRUCTION DOCUMENTS

ROOSEVELT AVENUE & VFW BOULEVARD

SAN ANTONIO, TEXAS

DECEMBER 1, 2021

OWNER:

Public Works Department
The City of San Antonio
Municipal Plaza Building
114 W. Commerce, 6th Floor
San Antonio, TX 78283
(210) 207-8022

CITY OF SAN ANTONIO PUBLIC WORKS DEPARTMENT

World Heritage Office
The City of San Antonio
101 S. Santa Rosa Avenue
San Antonio, TX 78207
(210) 207-2111

CITY OF SAN ANTONIO WORLD HERITAGE OFFICE

CITY COUNCIL:

RON NIRENBERG	MAYOR
MARIO BRAVO	DISTRICT 1
JALEN MCKEE-RODRIGUEZ	DISTRICT 2
PHYLLIS VIAGRAN	DISTRICT 3
DR. ADRIANA ROCHA GARCIA	DISTRICT 4
TERI CASTILLO	DISTRICT 5
MELISSA CABELLO HAVRDA	DISTRICT 6
ANA SANDOVAL	DISTRICT 7
MANNY PELAEZ	DISTRICT 8
JOHN COURAGE	DISTRICT 9
CLAYTON PERRY	DISTRICT 10

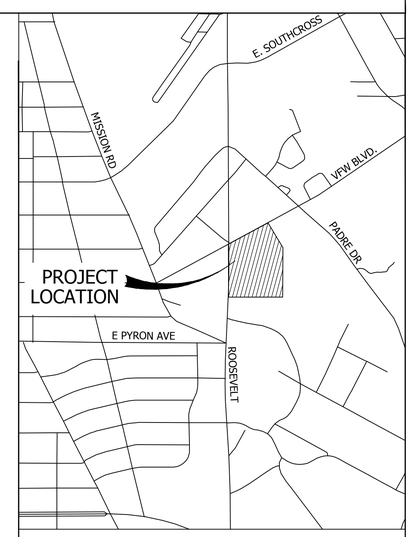

LOCATION MAP

NORTH

SHEET INDEX:

NO.	SHEET NAME
	COVER SHEET
COSA	COSA GENERAL NOTES
NOTES	GENERAL NOTES
SURV. A	SITE SURVEY
SURV. B	SITE SURVEY
CIVIL	
C1	SITE PLAN
C2	GRADING & DRAINAGE PLAN
C3	EROSION, SEDIMENTATION, & TREE PROTECTION PLAN
ARCHITECTURE	
G-001	GENERAL INFORMATION
G-101	ACCESSIBILITY GUIDELINES
G-102	ACCESSIBILITY GUIDELINES
G-103	ACCESSIBILITY GUIDELINES
G-104	ACCESSIBILITY GUIDELINES
G-105	ACCESSIBILITY GUIDELINES
A-101	SITE PLAN
A-102	SITE DETAILS
A-202	FLOOR PLAN
A-203	ROOF PLAN
A-204	ENLARGED PLANS
A-301	REFLECTED CEILING PLAN
A-401	SCHEDULES
A-402	DOOR TYPES, WINDOW TYPES & DETAILS
A-403	SCREEN PANEL TYPES & DETAILS
A-501	EXTERIOR ELEVATIONS
A-601	BUILDING SECTIONS
A-602	BUILDING SECTIONS
A-603	BUILDING SECTIONS
A-604	WALL SECTIONS
A-605	WALL SECTIONS
A-606	WALL SECTIONS
A-607	WALL DETAILS
A-608	WALL DETAILS
A-701	MISC. DETAILS
A-801	INTERIOR ELEVATIONS
A-802	INTERIOR ELEVATIONS
A-803	INTERIOR ELEVATIONS
STRUCTURAL	
S-000	GENERAL NOTES
S-001	GENERAL NOTES
S-002	TYPICAL FOUNDATION DETAILS
S-003	TYPICAL FOUNDATION DETAILS
S-004	TYPICAL FRAMING DETAILS
S-005	ISOMETRIC VIEW
S-100	FOUNDATION PLAN
S-200	DOME SUPPORT & TRELLIS PLAN
S-201	ROOF FRAMING PLAN
S-300	FOUNDATION DETAILS
S-400	FRAMING DETAILS
S-500	BRACED FRAME ELEVATIONS
S-600	FRAMING ELEVATIONS
MECHANICAL	
M-001	MECHANICAL SYMBOLS, ABBREVIATIONS & GENERAL NOTES
M-201	FLOOR PLAN- MECHANICAL
M-202	ROOF PLAN- MECHANICAL
M-301	MECHANICAL- SCHEDULE
M-401	MECHANICAL DETAILS
ELECTRICAL	
E-001	ELECTRICAL SYMBOLS, ABBREVIATIONS & GENERAL NOTES
E-101	SITE PLAN- ELECTICAL
E-201	FLOOR PLAN- ELECTRICAL- POWER
E-202	ROOF PLAN- ELECTRICAL- POWER
E-301	FLOOR PLAN- ELECTRICAL- LIGHTING
E-501	FLOOR PLAN- ELECTRICAL- SPECIAL SYSTEMS
E-601	ELECTRICAL- PANEL SCHEDULES
E-701	ELECTRICAL- ONE-LINE DIAGRAM
PLUMBING	
P-001	PLUMBING SYMBOLS, ABBREVIATIONS & GENERAL NOTES
P-200	UNDERFLOOR PLAN- PLUMBING
P-201	FLOOR PLAN- PLUMBING
P-202	ROOF PLAN- PLUMBING
P-401	PLUMBING SCHEDULES
P-501	PLUMBING RISER DIAGRAMS
UTILITIES	
1	GENERAL NOTES
2	WATER PLAN
3	FIRE PROTECTION PLAN
4	SEWER PLAN
5	UTILITY LAYOUT PLAN
LANDSCAPE ARCHITECTURE	
L0.00	SITE ORIENTATION PLAN
L0.01	DEMOLITION & TREE PRESERVATION PLAN
L0.02	DEMOLITION & TREE PRESERVATION PLAN
L0.03	DEMOLITION & TREE PRESERVATION PLAN
L0.04	DEMOLITION & TREE PRESERVATION PLAN
L0.05	DEMOLITION & TREE PRESERVATION PLAN
L0.06	TREE PRESERVATION DETAILS
L1.01	LAYOUT PLAN
L1.02	LAYOUT PLAN
L1.03	LAYOUT PLAN
L1.04	LAYOUT PLAN
L1.05	LAYOUT PLAN
L1.06	LAYOUT PLAN
L3.00	DETAIL INDEX
L3.01	SITE DETAILS
L3.02	SITE DETAILS
L3.03	SITE DETAILS
L3.04	SITE DETAILS
L3.05	LIGHTING DETAILS & SCHEDULE
L3.06	SITE DETAILS
L3.07	SITE DETAILS
L4.01	PLANTING PLAN
L4.02	PLANTING PLAN
L4.03	PLANTING PLAN
L4.04	PLANTING PLAN
L4.05	PLANTING PLAN
L4.06	PLANTING DETAILS & NOTES
L4.07	PLANTING DETAILS & NOTES
L5.01	IRRIGATION PLAN
L5.02	IRRIGATION PLAN
L5.03	IRRIGATION PLAN
L5.04	IRRIGATION PLAN
L5.05	IRRIGATION NOTES & DETAILS
L5.06	TEMPORARY IRRIGATION DETAILS
FPSP	FIRE PROTECTION SITE PLAN

PRIME CONSULTANT/LANDSCAPE ARCHITECT/CIVIL ENGINEER/ STRUCTURAL ENGINEER

DUNAWAY

Dunaway Associates
118 Broadway Street · Suite 201
San Antonio, Texas 78205
Tel: 210.267.5246
Fax: 817.335.7437

ARCHITECT

muñoz

Muñoz & Co.
1017 North Main Ave. Suite 300
San Antonio, TX 78212
www.muno-co.com
Tel: (210) 349-1163

MEP ENGINEERING

ProjectVerde ENGINEERING

Project Verde, LLC
723 S. Flores
San Antonio, TX 78204
(210) 263-3246

UTILITIES

YPR

Young Professional Recourses
8209 Rough Rider Dr #101, Windcrest
San Antonio, TX 78239
Tel: (210) 590-9215

SURVEY

POZNECKI CAMARILLO INC

Poznecki-Camarillo, LLC
5835 Callaghan Rd, Ste. 200
San Antonio, TX 78228
Tel: (210) 349-3273

5675.001 WORLD HERITAGE CENTER

95% CONSTRUCTION DOCUMENTS

GENERAL NOTES:

1. ALL CONSTRUCTION SHALL CONFORM TO THE CITY OF SAN ANTONIO STANDARD SPECIFICATIONS FOR CONSTRUCTION JUNE 2008, OR LATEST.
2. NO EXTRA PAYMENT SHALL BE ALLOWED FOR WORK CALLED FOR ON THE PLANS, BUT NOT INCLUDED IN THE BID PROPOSAL. THIS INCIDENTAL WORK WILL BE REQUIRED AND SHALL BE INCLUDED IN THE PAY ITEM TO WHICH IT RELATES.
3. THE CONTRACTOR SHALL PROVIDE ACCESS FOR THE DELIVERY OF MAIL BY THE U.S. POSTAL SERVICE.
4. THE CONTRACTOR SHALL BE RESPONSIBLE FOR RESTORING TO ITS ORIGINAL OR BETTER CONDITION ANY DAMAGE DONE TO EXISTING FENCES, CONCRETE ISLANDS, STREET PAVING, CURBS, SHRUBS, BUSHES OR DRIVEWAYS. (NO SEPARATE PAY ITEM.)
5. IT IS THE CONTRACTOR'S RESPONSIBILITY TO SEE THAT ALL SIGNS AND BARRICADES ARE PROPERLY INSTALLED AND MAINTAINED. ALL LOCATIONS AND DISTANCES WILL BE DECIDED UPON IN THE FIELD BY THE CONTRACTOR, USING THE "TEXAS MANUAL ON UNIFORM TRAFFIC CONTROL DEVICES". THE CITY'S CONSTRUCTION INSPECTOR AND TRAFFIC ENGINEERING REPRESENTATIVE WILL ONLY BE RESPONSIBLE TO INSPECT BARRICADES AND SIGNS. IF, IN THE OPINION OF THE TRAFFIC ENGINEERING REPRESENTATIVE AND THE CONSTRUCTION INSPECTOR, THE BARRICADES AND SIGNS DO NOT CONFORM TO ESTABLISHED STANDARDS OR ARE INCORRECTLY PLACED OR ARE INSUFFICIENT IN QUANTITY TO PROTECT THE GENERAL PUBLIC, THE CONSTRUCTION INSPECTOR SHALL HAVE THE OPTION TO STOP OPERATIONS UNTIL SUCH TIME AS THE CONDITIONS ARE CORRECTED.
6. IF THE NEED ARISES, ADDITIONAL BARRICADES AND DIRECTIONAL DEVICES MAY BE ORDERED BY THE TRAFFIC ENGINEERING REPRESENTATIVE AT THE CONTRACTOR'S EXPENSE.
7. DUE TO FEDERAL REGULATIONS TITLE 49, PART 192.171 C.P.S. MUST MAINTAIN ACCESS TO GAS VALVES AT ALL TIMES. THE CONTRACTOR MUST PROTECT AND WORK AROUND ANY GAS VALVES THAT ARE IN THE PROJECT AREA.
8. CONTRACTOR SHALL NOTIFY THE CITY INSPECTOR TWENTY FOUR (24) HOURS PRIOR TO BACKFILL OF ANY UTILITY TRENCHES TO SCHEDULE FOR DENSITY TEST AS REQUIRED.
9. CONTRACTOR SHALL PRESERVE ALL CONSTRUCTION STAKES, MARKS, ETC. IF ANY ARE DESTROYED OR REMOVED BY THE CONTRACTOR OR HIS EMPLOYEES, THEY SHALL BE REPLACED AT THE CONTRACTOR'S EXPENSE.
10. CONTRACTOR SHALL NOTIFY ALL UTILITY COMPANIES PRIOR TO CONSTRUCTION TO DETERMINE THE LOCATION OF EXISTING UTILITIES. CONTRACTOR SHALL NOTIFY THE FOLLOWING AT LEAST FORTY-EIGHT (48) HOURS PRIOR TO EXCAVATION OPERATION:

SAN ANTONIO WATER SYSTEM (SAWS)	233-2010
BEXAR METROPOLITAN WATER DISTRICT (BEXAR MET)	354-6538 / 357-5741
COSA DRAINAGE	207-8048
COSA SIGNAL OPERATIONS	207-7720 / 207-7765
TEXAS STATE WIDE ONE CALL LOCATOR	1-800-344-8377
- CITY PUBLIC SERVICE ENERGY	
- TIME WARNER	
- AT&T	
- MCI	

11. THE EXISTENCE AND LOCATION OF UNDERGROUND UTILITIES INDICATED ON THE PLANS ARE TAKEN FROM AVAILABLE RECORDS AND ARE NOT GUARANTEED, BUT SHALL BE INVESTIGATED AND VERIFIED BY THE CONTRACTOR BEFORE STARTING WORK. THE CONTRACTOR SHALL BE HELD RESPONSIBLE FOR ANY DAMAGE TO AND FOR THE MAINTENANCE AND PROTECTION OF THE EXISTING UTILITIES EVEN IF THEY ARE NOT SHOWN ON THE PLANS. LOCATION AND DEPTH OF EXISTING UTILITIES SHOWN HERE ARE APPROXIMATE ONLY. ACTUAL LOCATIONS AND DEPTHS MUST BE VERIFIED BY THE CONTRACTOR PRIOR TO CONSTRUCTION AND THEY SHALL BE RESPONSIBLE FOR PROTECTION OF SAME DURING CONSTRUCTION.
12. ALL WASTE MATERIAL SHALL BECOME PROPERTY OF THE CONTRACTOR AND SHALL BE THEIR SOLE RESPONSIBILITY TO DISPOSE OF THIS MATERIAL OFF THE LIMITS OF THE LIMITS OF THE PROJECT. NO WASTE MATERIAL SHALL BE PLACED IN EXISTING LOWS THAT WILL BLOCK OR ALTER FLOW LIMITS OF EXISTING ARTIFICIAL OR NATURAL DRAINAGE.
13. THE CONTRACTOR SHALL NOT PLACE ANY WASTE MATERIAL IN THE 100-YEAR FLOOD PLAIN WITHOUT FIRST OBTAINING AN APPROVED FLOOD PLAIN DEVELOPMENT PERMIT.
14. THE CONTRACTOR SHALL MAINTAIN ALL ADJOINING STREETS AND TRAVELED ROUTES FREE FROM SPILLED AND/OR TRACKED CONSTRUCTION MATERIALS AND/OR DEBRIS.
15. IF THE CONTRACTOR ENCOUNTERS ANY ARCHAEOLOGICAL DEPOSITS DURING CONSTRUCTION OPERATIONS, THE CONTRACTOR MUST STOP EXCAVATION IMMEDIATELY, CONTACT CITY INSPECTOR, AND CALL THE CITY HISTORIC PRESERVATION OFFICE AT 207-7306 OR 207-3327 FOR AN ARCHAEOLOGICAL INVESTIGATION, THE CONTRACTOR CANNOT BEGIN EXCAVATION AGAIN WITHOUT WRITTEN PERMISSION FROM THE CITY.
   - 15.1. IF MORE THAN THREE (3) DAYS ARE REQUIRED FOR INVESTIGATION (NOT INCLUDING HOLIDAY AND WEEKENDS) AND IF THE CONTRACTOR IS UNABLE TO WORK IN OTHER AREAS, THEN THE CONTRACTOR WILL BE ALLOWED TO NEGOTIATE FOR ADDITIONAL CONSTRUCTION TIME UPON WRITTEN REQUEST WITHIN TEN (10) DAYS AFTER THE FIRST NOTICE TO THE CITY OF ARCHAEOLOGICAL INVESTIGATION FOR EACH EVENT.
   - 15.2. IF THE TIME REQUIRED FOR INVESTIGATION IS LESS THAN OR EQUAL TO THREE (3) DAYS FOR EACH EVENT, CONTRACT DURATION WILL NOT BE EXTENDED.
16. IF SUSPECTED CONTAMINATION IS ENCOUNTERED DURING CONSTRUCTION OPERATIONS, C.O.S.A. SHALL BE NOTIFIED IMMEDIATELY WHEN CONTAMINATED SOILS AND/OR GROUNDWATER ARE ENCOUNTERED AT LOCATIONS NOT IDENTIFIED IN THE PLANS. THE NOTIFICATION SHOULD INCLUDE THE STATION NUMBER, TYPE OF CONTAMINATED MEDIA, EVIDENCE OF CONTAMINATION AND MEASURES TAKEN TO CONTAIN THE CONTAMINATED MEDIA AND PREVENT PUBLIC ACCESS. THE CONTAMINATED SOIL AND/OR GROUNDWATER SHALL NOT BE REMOVED FROM THE LOCATION WITHOUT PRIOR C.O.S.A. APPROVAL. THE CONTRACTOR MUST STOP THE EXCAVATION IMMEDIATELY AND CONTACT THE C.O.S.A. INSPECTOR. THE CONTRACTOR CANNOT BEGIN EXCAVATION ACTIVITIES WITHOUT WRITTEN PERMISSION FROM THE CITY.
17. CONTRACTOR IS TO INCLUDE A MAILBOX POST BLOCKOUT FOR VACANT LOTS AND ALL RESIDENCES WHICH DO NOT HAVE MAILBOXES AT THE CURB. BLOCKOUTS ARE PROVIDED FOR FUTURE USE BY THE POST OFFICE.
18. CONTRACTOR SHALL NOT REMOVE OR ADJUST ANY VIA FACILITIES. THE CONTRACTOR MUST CONTACT VIA FOURTEEN (14) DAYS PRIOR, FOR THE REMOVAL OF BENCHES, STOP POLES OR ANY OTHER VIA FACILITIES THAT MAY BE PRESENT. PLEASE PROVIDE THIRTY (30) DAYS PRIOR NOTICE FOR SHELTER REMOVAL (TELEPHONE NUMBERS: (210) 362-2155 OR (210) 362-2096). THE CONTRACTOR WILL BE LIABLE FOR ANY DAMAGES TO VIA FACILITIES NOT REMOVED BY VIA. THE CONTRACTOR IS REQUIRED TO REPLACE ALL FLATWORK REMOVED OR DAMAGED IN THE COURSE OF EXECUTING THE CONTRACT UNLESS OTHERWISE NOTED BY VIA. THE CONTRACTOR WILL BE RESPONSIBLE FOR PROTECTING VIA FACILITIES IF ADJACENT TO WORK AREA.

TREE PROTECTION AND PRESERVATION GENERAL NOTES:

1. NO UTILITY OR STREET EXCAVATION WORK SHALL BEGIN IN AREAS WHERE TREE PRESERVATION AND TREATMENT MEASURES HAVE NOT BEEN COMPLETED AND APPROVED.
2. TREE PROTECTION FENCING SHALL BE REQUIRED. TREE PROTECTION FENCING SHALL BE INSTALLED, MAINTAINED AND REPAIRED BY THE CONTRACTOR DURING SITE CONSTRUCTION. DURING CONSTRUCTION ACTIVITY, AT LEAST A SIX-INCH LAYER OF COARSE MULCH SHALL BE PLACED AND MAINTAINED OVER THE ROOT PROTECTION ZONE (NO SEPARATE PAY ITEM).
3. THE CONTRACTOR SHALL AVOID CUTTING ROOTS LARGER THAN ONE INCH IN DIAMETER WHEN EXCAVATING NEAR EXISTING TREES. EXCAVATION IN THE VICINITY OF TREES SHALL PROCEED WITH CAUTION. THE CONTRACTOR SHALL CONTACT THE CITY INSPECTOR FOR GUIDANCE.
4. ROOTS WILL BE CUT WITH A ROCK SAW OR BY HAND, NOT BY AN EXCAVATOR OR OTHER ROAD CONSTRUCTION EQUIPMENT.
5. ALL CURB AND SIDEWALK WORK SHALL USE ALTERNATIVE CONSTRUCTION METHODS TO MINIMIZE EXTENSIVE ROOT DAMAGE TO TREES (REFER TO DETAILS).
6. EXPOSED ROOTS SHALL BE COVERED AT THE END OF THE DAY USING TECHNIQUES SUCH AS COVERING WITH SOIL, MULCH, OR WET BURLAP.
7. NO EQUIPMENT, VEHICLES OR MATERIALS SHALL OPERATE OR BE STORED WITHIN THE ROOT PROTECTION ZONE OF ANY TREE NEAR THE PROJECT. ROOT PROTECTION ZONE IS ONE (1) FOOT OF RADIUS PER INCH OF TREE'S DIAMETER. A 10-INCH DIAMETER TREE WOULD HAVE A 10-FOOT RADIUS ROOT PROTECTION ZONE AROUND THE TREE ROOTS OR BRANCHES IN CONFLICT WITH THE CONSTRUCTION SHALL BE CUT CLEANLY ACCORDING TO PROPER PRUNING METHODS. OAK WOUNDS SHALL BE PAINTED OVER WITHIN 30 MINUTES TO PREVENT OAK WILT.
8. SAPLINGS, SHRUBS OR BUSHES TO BE CLEARED FROM THE PROTECTED ROOT ZONE AREA OF A LARGE TREE SHALL BE REMOVED BY HAND AS DESIGNATED BY THE INSPECTOR.
9. NO WIRES, NAILS OR OTHER MATERIAL MAY BE ATTACHED TO PROTECTED TREES.
10. TREES, TREE LIMBS, BUSHES AND SHRUBS LOCATED IN THE CITY STREET OR ALLEY RIGHT-OF-WAY OR PERMANENT EASEMENTS WHICH INTERFERE WITH PROPOSED CONSTRUCTION ACTIVITIES SHALL BE PROPERLY PRUNED FOLLOWING THE ANSI A-300 STANDARDS FOR PRUNING. ALL TREE PRUNING SHALL BE COMPLETED BY A CITY OF SAN ANTONIO TREE MAINTENANCE LICENSED CONTRACTOR (ARTICLE 21-171, CITY CODE) ONLY AFTER APPROVAL FROM THE CAPITAL PROJECTS MANAGEMENT THROUGH THE INSPECTOR.
11. NO EXCESSIVE TREE TRIMMING WILL BE PERMITTED.
12. ALL DEBRIS GENERATED BY THE PRUNING AND TRIMMING OF THE TREES AND/OR BUSHES SHALL BECOME THE PROPERTY OF THE CONTRACTOR AND SHALL BE DISPOSED OF PROPERLY (NO SEPARATE PAY ITEM).
13. TREES MUST BE MAINTAINED IN GOOD HEALTH THROUGHOUT THE CONSTRUCTION PROCESS. MAINTENANCE MAY INCLUDE, BUT NOT LIMITED TO: WATERING THE ROOT PROTECTION ZONE, WASHING THE FOLIAGE, FERTILIZATION, PRUNING, ADDITIONAL MULCH APPLICATIONS AND OTHER MAINTENANCE AS NEEDED ON THE PROJECT.
14. ANY TREE REMOVAL SHALL BE APPROVED BY THE CITY ARBORIST. (TELEPHONE: 207-0278)
15. TREES WHICH ARE DAMAGED OR LOST DUE TO THE CONTRACTOR'S NEGLIGENCE DURING CONSTRUCTION SHALL BE MITIGATED TO THE CITY'S SATISFACTION.
16. TREE PLANTING FOR MITIGATION OR ENHANCEMENT: ALL PLANTED TREES SHALL BE MAINTAINED IN A HEALTHY CONDITION AT ALL TIMES. THIS INCLUDES IRRIGATION, FERTILIZING, PRUNING AND OTHER MAINTENANCE AS NEEDED ON THE PROJECT. TREES THAT DIE WITHIN TWELVE (12) MONTHS SHALL BE REPLACED WITH A TREE OF EQUAL SIZE AND SPECIES.

ACCESSIBILITY REQUIREMENTS:

1. THE CONTRACTOR SHALL PROVIDE AND MAINTAIN VEHICULAR AND PEDESTRIAN ACCESS AT ALL TIMES TO LOCAL RESIDENCES AND BUSINESSES.
2. WHEN THE WORK REQUIRES THE EXCAVATION OF THE STREET AND THE REMOVAL OF THE EXISTING DRIVEWAY APPROACHES AND SIDEWALKS, THE CONTRACTOR SHALL BE RESPONSIBLE FOR PROVIDING TEMPORARY ALL-WEATHER ACCESS TO THE BUSINESS AND RESIDENCES. THE TEMPORARY DRIVEWAY APPROACHES SHALL BE CONSTRUCTED WITH FLEXIBLE BASE OR GRAVEL MATERIAL AT NO SEPARATE COST TO THE CITY.
3. PRIOR TO INITIATING THE CONSTRUCTION OF NEW DRIVEWAY APPROACHES, THE CONTRACTOR SHALL GIVE ADVANCE WARNING IN PERSON, OR IN WRITING, OF AT LEAST 48 HOURS TO EACH RESIDENCE THAT WILL BE IMMEDIATELY AFFECTED, SO THAT ALTERNATE PLANS MAY BE MADE BY THE RESIDENTS.
4. FOR BUSINESSES WITH MORE THAT ONE DRIVEWAY, AT LEAST ONE DRIVEWAY SHALL REMAIN OPEN WHILE THE OTHER NEW DRIVEWAY APPROACHES ARE CONSTRUCTED FOR BUSINESSES WITH ONLY ONE DRIVEWAY, THE NEW DRIVEWAY APPROACH SHALL BE CONSTRUCTED IN HALF WIDTHS, UNLESS A TEMPORARY ASPHALT DRIVEWAY IS FIRST INSTALLED AT NO SEPARATE COST TO THE CITY.

REVISIONS		
NO.	DATE	DESCRIPTION

COSA GENERAL NOTES

DUNAWAY
118 Broadway•Suite 201•San Antonio, Texas 78205
Tel: 210.267.5246
(TX REG. F-1114)

muñoz
723 S. Flores • San Antonio, Texas 78204
210.349.1163 • www.munoz-co.com

WORLD HERITAGE CENTER
SAN ANTONIO, TEXAS

PRELIMINARY
FOR REVIEW ONLY
These documents are for Design Review and not intended for Construction, Bidding or Permit Purposes. They were prepared by, or under the supervision of:
Bryan Kye Mask
L.A.# 2369

JOB NO.	5675.001
DESIGNED BY:	TLL
DRAWN BY:	DAM
CHECKED BY:	BKM
DATE:	12/01/2021
SHEET:	COSA

FULL PATH: G:\Production4000\005600\5675\001\PLA\Drawings\95% CD\Plot SheetsG:\Production4000\005600\5675\001\PLA\Drawings\95% CD\Plot Sheets\5675.001-General Notes
FILENAME: 5675.001-General Notes.dwg
PLOTTED BY: Damaris Martinez
PLOTTED ON: Thursday, December 02, 2021
PLOTTED AT: 1:39:38 PM
PLOTTED WITH: DWG To PDF.pc3

GENERAL NOTES:

1. THE CONTRACTOR SHALL MAINTAIN THE ROAD IN GOOD WORKING ORDER BY PERIODICALLY ADDING CRUSHED LIMESTONE TOAD BASE MATERIAL AND GRADING TO ENSURE A SMOOTH, NON-RUTTED SURFACE. THE CONTRACTOR SHALL REPAIR THE ROAD AS REQUESTED BY THE OWNER.

2. THE CONTRACTOR SHALL COORDINATE ALL CONSTRUCTION ACTIVITIES WITH THE OWNER AND ADJUST CONSTRUCTION ACTIVITIES, DELIVERIES, STORAGE, ETC. TO ACCOMMODATE THE OWNER'S NEEDS FOR USE OF THESE FACILITIES.

3. THE CONSTRUCTION STAGING AREA IS LOCATED __________. THE EXACT BOUNDARIES OF THE STAGING AREA WILL BE AGREED TO BY THE OWNER AND THE CONTRACTOR PRIOR TO THE START OF CONSTRUCTION. THE CONTRACTOR SHALL SECURE THE STAGING AREA WITH A MINIMUM OF A 6' CHAIN LINK FENCE WITH LOCKABLE GATES. THE STAGING AREA SHALL BE MAINTAINED WITH A DRIVING SURFACE SUITABLE TO PREVENT EROSION.

4. UPON COMPLETION OF THE CONSTRUCTION, THE STAGING AREA SHALL BE REMOVED. THE AREA DISTURBED SHALL BE REGRADED TO PROVIDE A SMOOTH CONTOUR. ALL GRAVEL, CRUSHED LIMESTONE, ETC. SHALL BE COMPLETELY REMOVED PRIOR TO FINISH GRADING.

SITE PLAN NOTES:

1. THE CONTRACTOR SHALL BE RESPONSIBLE FOR ALL CONSTRUCTION SURVEYING FOR THIS PROJECT.

2. THE CONTRACTOR, AND THEIR AGENTS, SUBCONTRACTOR, ENGINEER, OR SURVEYOR ARE COMPLETELY RESPONSIBLE FOR THE VERIFICATION OF THE ACCURACY OF THE DIMENSION CONTROL FURNISHED HEREIN. THE OWNER AND HIS AGENTS ARE NOT RESPONSIBLE FOR THE ACCURACY OF THE COORDINATES FURNISHED. THE CONTRACTOR IS REQUIRED TO VERIFY ALL THE COORDINATES FOR ACCURACY.

3. COORDINATES PROVIDED INDICATE THE DESIGN INTENT OF THE LANDSCAPE ARCHITECT. THE CONTRACTOR SHALL NOTIFY THE LANDSCAPE ARCHITECT OF ANY INCONSISTENCIES OR DISCREPANCIES FOUND DURING CONSTRUCTION. THE CONTRACTOR SHALL VERIFY ALL COORDINATES DURING CONSTRUCTION LAYOUT PRIOR TO THE COMMENCEMENT OF CONSTRUCTION.

4. THE CONTRACTOR SHALL REFER TO BUILDING PLANS FOR ACTUAL BUILDING DIMENSIONS AND FOR DETAILED DIMENSIONING OF ENTRANCE FEATURES.

5. WRITTEN DIMENSIONS AND COORDINATES SHALL GOVERN OVER SCALED DRAWINGS.

6. ALL IMPROVEMENTS SHALL BE STAKED IN THE FIELD BY THE CONTRACTOR AND APPROVED BY THE OWNER PRIOR TO CONSTRUCTION.

7. ALL CONSTRUCTION WILL CONFORM TO CITY OF SAN ANTONIO STANDARDS AND SPECIFICATIONS.

8. ALL DIMENSIONS SHOWN ARE TO FACE OF CURB, FACE OF WALL, OR FACE OF BUILDING UNLESS OTHERWISE NOTED.

9. THE CONTRACTOR SHALL COORDINATE INSTALLATION OF ALL SIGNS, PAVEMENT MARKINGS AND OTHER TRAFFIC CONTROL DEVICES WITH OTHER CONTRACTORS ON SITE.

10. LAYOUT AND GRADING FOR THE IMPROVEMENTS SHALL OCCUR AS DIRECTED BY THE LANDSCAPE ARCHITECT WITH THE FOLLOWING GUIDELINES:

    - ALL WALKS SHALL HAVE A MAXIMUM CROSS SLOPE OF 2% (1:48) IN THE DIRECTION OF THE DOWNHILL SIDE.
    - THE LONGITUDINAL SLOPE OF THE WALKS SHALL BE NO GREATER THAN 5% (1:20) UNLESS OTHERWISE NOTED.
    - ALL GRADES SHALL BE FINISHED TO A SMOOTH, FLOWING CONTOUR, MAINTAINING EXISTING FLOW PATTERNS UNLESS DIRECTED OTHERWISE.

12. FIRE LANE REQUIREMENTS TO BE PER CITY OF **SAN ANTONIO** STANDARDS. PAINT COLORS MAY VARY AND SHALL BE COORDINATED WITH LANDSCAPE ARCHITECT AND APPROVED BY FIRE MARSHAL PRIOR TO INSTALLATION.

13. THE CONTRACTOR SHALL VERIFY ALL BUILDING SETBACK LINES, EASEMENT LINES, AND VISIBILITY LINES IN THE FIELD PRIOR TO CONSTRUCTION.

14. TREE TRUNK LOCATIONS SHOWN ARE APPROXIMATE. IF LOCATIONS CONFLICT WITH ANY PROPOSED IMPROVEMENT, CONTRACTOR SHALL CONTACT LANDSCAPE ARCHITECT FOR DIRECTION PRIOR TO ANY CONSTRUCTION.

UTILITY NOTES:

1. IN THE EVENT THAT EXISTING UTILITIES SUCH AS WATER, GAS, TELEPHONE, ELECTRIC, ETC., MUST BE TAKEN OUT OF SERVICE TO FACILITATE CONSTRUCTION, THE CONTRACTOR SHALL PROVIDE TEMPORARY UTILITIES TO THE SATISFACTION OF THE OWNER.

2. THE CONTRACTOR SHALL USE EXTREME "CAUTION" WHEN WORKING IN AREAS ADJACENT TO GAS LINES, UNDERGROUND ELECTRIC CABLE, FIBER OPTIC CABLE AND UNDERGROUND TELEPHONE CABLE.

3. WHERE EXISTING UTILITIES OR SERVICE LINES ARE CUT, BROKEN OR DAMAGED, THE CONTRACTOR SHALL REPLACE OR REPAIR THE UTILITIES OR SERVICE LINES WITH THE SAME TYPE OF ORIGINAL MATERIAL AND CONSTRUCTION, OR BETTER, UNLESS OTHERWISE SHOWN OR NOTED ON THE PLANS. THE CONTRACTOR SHALL IMMEDIATELY NOTIFY THE ENGINEER OF ANY CONFLICTS IN GRADES AND ALIGNMENT.

DEMOLITION PLAN NOTES:

1. THE CONTRACTOR IS RESPONSIBLE FOR THE DEMOLITION, REMOVAL, AND DISPOSING OF EXISTING STRUCTURES, UTILITIES, PAVEMENT, TREES, ETC., WITHIN CONSTRUCTION AREA, IN A LOCATION APPROVED BY ALL GOVERNING AUTHORITIES. WHERE STRUCTURES ARE TO BE REMOVED, REMOVE BUILDING AND ALL ASSOCIATED PAVING; INCLUDING ALL REINFORCING, COMPACTED SUBGRADE, FOOTING AND BASE MATERIAL TO 12" BELOW FOOTINGS. FILL AND COMPACT ALL HOLES WITH APPROVED FILL MATERIAL TO FLUSH WITH SURROUNDING GRADES. REPAIR ANY DAMAGED AREAS TO EXISTING (PRIOR TO DEMOLITION) OR BETTER CONDITIONS.

2. STATE LAW REQUIRES THAT DIG-TESS BE CONTACTED 48 HOURS PRIOR TO COMMENCEMENT OF ANY CONSTRUCTION ACTIVITIES.

3. THE CONTRACTOR IS RESPONSIBLE FOR OBTAINING ALL PERMITS REQUIRED FOR DEMOLITION AND DISPOSAL,

4. PRIOR TO DEMOLITION OCCURRING, ALL EROSION CONTROL DEVICES ARE TO BE INSTALLED.

5. ANY AND ALL ON-SITE REFUSE SHALL BE PROPERLY REMOVED AT CONTRACTOR'S EXPENSE.

6. THE LOCATIONS OF ALL EXISTING UTILITIES SHOWN ON THESE PLANS HAVE BEEN DETERMINED FROM THE BEST INFORMATION AVAILABLE AND ARE GIVEN FOR THE CONVENIENCE OF THE CONTRACTOR. THE ENGINEER ASSUMES NO RESPONSIBILITY FOR THEIR ACCURACY. PRIOR TO THE START OF ANY DEMOLITION ACTIVITY, THE CONTRACTOR SHALL NOTIFY THE UTILITY COMPANIES FOR ON-SITE LOCATIONS OF EXISTING UTILITIES.

7. ALL EXISTING SEWERS, PIPING AND UTILITIES SHOWN ARE NOT TO BE INTERPRETED AS THE EXACT LOCATION, OR AS THE ONLY OBSTACLES THAT MAY OCCUR ON THE SITE. VERIFY EXISTING CONDITIONS AND PROCEED WITH CAUTION AROUND ANY ANTICIPATED FEATURES. GIVE NOTICE TO ALL UTILITY COMPANIES REGARDING DESTRUCTION AND/OR REMOVAL OF ALL SERVICE LINES AND CAP ALL LINES BEFORE PROCEEDING WITH THE WORK. EXISTING UTILITIES, NOT IN USE, UNDER BUILDING FOOTPRINTS SHALL BE ABANDONED PER GEOTECHNICAL RECOMMENDATIONS.

8. THE CONTRACTOR SHALL BE RESPONSIBLE FOR THE DISCONNECTION OF UTILITY SERVICES TO THE EXISTING BUILDINGS PRIOR TO DEMOLITION OF THE BUILDING.

9. CONTINUOUS ACCESS SHALL BE MAINTAINED FOR THE SURROUNDING PROPERTIES AT ALL TIMES DURING DEMOLITION OF THE EXISTING FACILITIES.

10. CONTRACTOR MAY LIMIT SAWCUT AND PAVEMENT REMOVAL TO ONLY THOSE AREAS WHERE IT IS REQUIRED AS SHOWN ON THESE CONSTRUCTION PLANS, BUT IF ANY DAMAGE IS INCURRED ON ANY OF THE SURROUNDING PAVEMENT, ETC. THE CONTRACTOR SHALL BE RESPONSIBLE FOR ITS REMOVAL AND REPAIR.

11. ALL FENCES REMOVED TO FACILITATE CONSTRUCTION SHALL BE REPLACED AT THE EXISTING OR PROPOSED LOCATION AS DIRECTED BY THE OWNER'S PROJECT REPRESENTATIVE.

12. AT SITES WHERE DEMOLITION WILL OCCUR AT OR NEAR A PUBLIC STREET, THE CONTRACTOR SHALL SCHEDULE CONSTRUCTION ACTIVITIES AS SOON AS POSSIBLE SO THAT EDGES OF THE PAVEMENT WILL NOT BE LEFT UNPROTECTED LONGER THAN NECESSARY.

13. IF WATER WELL(S) IS DISCOVERED, PLUG IN ACCORDANCE WITH STATE REQUIREMENTS.

14. CONTRACTOR TO VERIFY PRESENCE OF HAZARDOUS MATERIAL IN DEMOLITION OF EXISTING STRUCTURES. ANY HAZARDOUS MATERIAL TO BE REMOVED IN ACCORDANCE WITH ALL NATIONAL AND GOVERNMENTAL REGULATIONS AND BEST PRACTICES (I.E. OSHA, ASTM, ETC.).

15. REMOVE TREES: REMOVE TREES BELOW FINISH GRADE. FILL AND COMPACT ALL HOLES WITH APPROVED FILL MATERIAL TO FLUSH WITH SURROUNDING GRADES. REPAIR ANY DAMAGED AREAS TO EXISTING (PRIOR TO DEMOLITION) OR BETTER CONDITIONS.

16. REMOVE POST: REMOVE EXISTING POST, INCLUDING FOOTINGS, ATTACHMENTS, HARDWARE AND OTHER ITEMS ASSOCIATED WITH THE POST. FILL AND COMPACT ALL HOLES WITH APPROVED FILL MATERIAL TO FLUSH WITH SURROUNDING GRADES. REPAIR ANY DAMAGED AREA TO EXISTING (PRIOR TO DEMOLITION) OR BETTER CONDITIONS.

17. COORDINATE ALL DEMOLITION AND CONSTRUCTION ACTIVITIES PRIOR TO COMMENCEMENT WITH CITY STAFF TO ENSURE SAFETY OF PATRONS.

18. CONTRACTOR SHALL DETERMINE LOCATIONS AND EXTENT OF ALL EXISTING SITE UTILITIES PRIOR TO COMMENCEMENT OF WORK.

19. PROTECT IN PLACE ALL ITEMS NOT SCHEDULED FOR REMOVAL OR RELOCATION, INCLUDING VEGETATION, HOSE BIBS, AND OTHER UTILITIES.

20. ALL SPECIFIED MATERIAL TO BE REMOVED AND DISPOSED OF OFF SITE.

21. CONTRACTOR SHALL ERECT LIMITS OF WORK BARRICADES TO ALLOW PEDESTRIAN CIRCULATION TO CONTINUE UNINTERRUPTED.

22. REFERENCE DETAIL BON SHEET L0.06 FOR TREE PROTECTION FENCING. INSTALL TREE PROTECTION FENCING BEFORE DEMOLITION COMMENCEMENT.

GRADING NOTES:

1. STRIP TOPSOIL TO A DEPTH NOT TO EXCEED 6" STOCKPILE AND REDISTRIBUTE TO GRADED AREAS ONCE ROUGH GRADING OPERATIONS ARE COMPLETE. STOCKPILE AREA TO BE APPROVED BY OWNER AND LANDSCAPE ARCHITECT PRIOR TO GRADING.

2. ALL PROPOSED GRADES INDICATED ARE FINISHED GRADES. THE PROPOSED PAVING IS SHOWN TO FINISHED GRADE AND THE CONTRACTOR IS RESPONSIBLE FOR EXCAVATING FOR IMPROVEMENTS AS PART OF THE OVERALL MASS GRADING.

3. ALL LAND FORMS AND SWALES SHALL BE GRADED TO BE A SMOOTH, FLOWING, ROUNDED SURFACE PROVIDING POSITIVE DRAINAGE AND VISUAL CONTINUITY.

4. CONTRACTOR IS RESPONSIBLE FOR REMOVAL OF ALL CLEARED BRUSH, DEBRIS, ETC. FROM WITHIN THE LIMITS OF CONSTRUCTION. DISPOSE OF MATERIAL OFF SITE.

5. EXISTING TREES WHICH ARE TO BE PRESERVED SHALL BE PROTECTED FROM DAMAGE DURING CONSTRUCTION. CONSTRUCTION EQUIPMENT SHALL NOT OPERATE, PARK OR BE STOPPED UNDER THE CANOPIES OF EXISTING TREES.

6. WHEN CLEARING FOR GRADING, THE CONTRACTOR SHALL COORDINATE TREE PRESERVATION WITH THE LANDSCAPE ARCHITECT AND OWNERS REPRESENTATIVE.

7. GRADING FOR THE IMPROVEMENTS SHALL OCCUR AS DIRECTED BY THE LANDSCAPE ARCHITECT WITH THE FOLLOWING GUIDELINES:

    - ALL WALKS SHALL HAVE A MAXIMUM CROSS SLOPE OF 2% (1:48) IN THE DIRECTION OF THE DOWNHILL SIDE.
    - THE LONGITUDINAL SLOPE OF THE WALKS SHALL BE NO GREATER THAN 5%. (1:20)
    - ALL GRADES SHALL BE FINISHED TO A SMOOTH, FLOWING CONTOUR, MAINTAINING EXISTING FLOW PATTERNS UNLESS DIRECTED OTHERWISE.

8. REFER TO EXISTING CONDITIONS AND REMOVAL ITEMS PLAN FOR SURVEY, BENCHMARKS, DEMOLITION, EXISTING TREE REMOVAL, AND CLEARING INFORMATION.

9. REFER TO LAYOUT SHEETS FOR LAYOUT INFORMATION.

10. REFER TO CIVIL FOR UTILITY INFORMATION.

11. CONTRACTOR IS RESPONSIBLE FOR THE LOCATION AND MARKING OF ALL EXISTING UNDERGROUND OR ABOVE GROUND UTILITIES WITHIN THE PROJECT AREA.

TREE PROTECTION NOTES:

1. A ROOT PROTECTION ZONE (RPZ) WILL BE ESTABLISHED AROUND EACH TREE TO BE PRESERVED. THE ROOT PROTECTION ZONE SHALL BE AN AREA DEFINED BY THE RADIUS EXTENDING OUTWARD FROM THE TRUNK OF THE TREE A DISTANCE OF ONE (1) LINEAR FOOT FOR EACH INCH DIAMETER INCH OF THE TREE. (I.E. A 10" TREE WILL HAVE A 10' RADIUS ROOT PROTECTION ZONE.)

2. AN **ORANGE MESH FENCE** DELINEATING THE RPZ SHALL BE ERECTED AND MAINTAINED UNTIL CONSTRUCTION IS COMPLETED.

3. WHERE CONSTRUCTION OCCURS WITHIN THE RPZ THE TREE PROTECTION FENCING IS TO BE SET 4' FROM THE NEW CONSTRUCTION.

4. TREE TRUNK PROTECTION IS REQUIRED FOR ALL TREE TRUNKS IN AREAS WHERE CONSTRUCTION OCCURS WITHIN THE ROOT PROTECTION ZONE.

5. ALL ROOTS LARGER THAN ONE-INCH DIAMETER ARE TO BE CUT CLEANLY AND OAK WOUNDS PAINTED WITH APPROVED TREE PAINT WITHIN 30 MINUTES.

6. NO EQUIPMENT, VEHICLES OR MATERIALS SHALL BE OPERATED OR STORED WITHIN THE ROOT PROTECTION ZONE.

7. NO CLEAN-OUT AREAS WILL BE CONSTRUCTED SO THAT MATERIAL WILL BE IN OR MIGRATE TO THE ROOT PROTECTION ZONE.

8. NO GRADE CHANGES MORE THAN 3" IS ALLOWED WITHIN THE ROOT PROTECTION ZONE.

3. RPZ SHALL BE SUSTAINED IN A NATURAL STATE AND SHALL BE FREE FROM VEHICULAR OR MECHANICAL TRAFFIC.

4. THE RPZ SHALL BE COVERED WITH MULCH TO REDUCE MOISTURE STRESS. **MULCH LOCATION AND AMOUNT SHALL COMPLY WITH CITY OF SAN ANTONIO UNIFIED DEVELOPMENT CODE, SECTION 35-523 (J)(1) OR AS APPROVED BY CITY ARBORIST.**

5. ROOTS OR BRANCHES IN CONFLICT WITH CONSTRUCTION SHALL BE CUT CLEANLY ACCORDING TO PROPER PRUNING METHODS. ALL OAK WOUNDS SHALL BE PAINTED WITHIN 30 MINUTES TO PREVENT OAK WILT INFECTION.

8. THE RPZ SHALL REMAIN PERVIOUS, I.E. GROUNDCOVER OR TURF AT COMPLETION OF LANDSCAPE INSTALLATION.

9. THE ASSOCIATED TREE PROTECTION DETAIL COMPLIES WITH THE MINIMUM TREE PROTECTION GUIDELINES FROM THE CITY OF SAN ANTONIO. WHERE POSSIBLE, PROVIDE FENCE TO TREE DRIP LINE OR GROUP TREES IN FENCE PERIMETER TO PROVIDE INCREASED PROTECTION.

10. SHRED (DOUBLE GRIND) TREES AND UNDERSTORY VEGETATION TO BE REMOVED FOR USE AS SHREDDED NATIVE BARK MULCH. IMPORT SHREDDED NATIVE BARK MULCH AS NECESSARY TO FULFILL THE REQUIREMENTS OF THE CONTRACT.

11. NO WORK SHALL BEGIN IN AREAS WHERE TREE PRESERVATION AND TREATMENT MEASURES HAVE NOT BEEN COMPLETED AND APPROVED.

12. TREES WHICH ARE DAMAGED OR LOST DUE TO THE CONTRACTOR'S NEGLIGENCE DURING CONSTRUCTION SHALL BE MITIGATED PER **UDC 35-523 (F) MITIGATION.**

13. TREES MUST BE MAINTAINED IN GOOD HEALTH THROUGHOUT THE CONSTRUCTION PROCESS. MAINTENANCE MAY INCLUDE BUT IS NOT LIMITED TO: WATERING THE ROOT PROTECTION ZONE, WASHING FOLIAGE, FERTILIZATION, PRUNING, ADDITIONAL MULCH APPLICATIONS AND OTHER MAINTENANCE AS NEEDED ON THE PROJECT.

EROSION CONTROL NOTES:

1. EROSION CONTROL MEASURES SHALL FOLLOW THE STORM WATER POLLUTION PREVENTION PLAN (SWPPP). ANY CHANGES TO THE SWPPP SHALL SUPERSEDE THE EROSION CONTROL PLAN. THE SWPPP IS TO BE KEPT ON-SITE AT ALL TIMES WITH THESE CONSTRUCTION DOCUMENTS FOR COMPLIANCE WITH THE TEXAS POLLUTANT DISCHARGE ELIMINATION SYSTEM (TPDES) GENERAL PERMIT.

2. CONTRACTOR SHALL BE RESPONSIBLE FOR ALL PERMITS, INCLUDING THE EPA NPDES PERMIT AND NOTIFICATION.

3. SOIL EROSION AND SEDIMENT CONTROL SHALL BE PROVIDED IN ACCORDANCE WITH THE CITY REGULATIONS.

4. PRIOR TO COMMENCING ANY CONSTRUCTION, A CONSTRUCTION ENTRANCE AND PERIMETER SILT FENCE SHALL BE INSTALLED AT THE LOCATION(S) SHOWN.

5. THE EROSION CONTROL PLAN WILL INCORPORATE EROSION CONTROL MEASURES AND TECHNIQUES TO PREVENT SEDIMENTATION AND ERODED SOIL FROM LEAVING THE SITE EITHER IN EXISTING STORM DRAIN SYSTEM OR ONTO ADJACENT PRIVATE OR PUBLIC PROPERTY. CONSTRUCT TEMPORARY EROSION CONTROL SYSTEMS AS SHOWN ON THE PLANS TO PROTECT ADJACENT PROPERTIES AND WATER RESOURCES FROM EROSION AND SEDIMENTATION. CONTRACTOR SHALL NOTIFY ENGINEER AT ONCE IF SITE CONDITIONS WARRANT ADDITIONAL EROSION CONTROL MEASURES. CONTRACTOR IS RESPONSIBLE FOR TAKING IMMEDIATE ACTION TO REMEDY EROSION CONTROL WHILE ENGINEER IS PREPARING RESPONSE.

6. THE STABILIZED CONSTRUCTION ENTRANCE HAS BEEN SHOWN ARBITRARILY. IT IS THE GENERAL CONTRACTOR'S CHOICE (IN COMPLIANCE WITH ALL MUNICIPAL REGULATIONS) TO DETERMINE THE LOCATION(S) OF PROJECT INGRESS/EGRESS POINTS. HOWEVER ALL ENTRANCES AT ALL TIMES SHALL BE PREPARED IN ACCORDANCE WITH THE STABILIZED CONSTRUCTION ENTRANCE DETAILS (SEE EROSION CONTROL DETAILS) AND CONTINUOUSLY MAINTAINED UNTIL FINAL PAVING IS ESTABLISHED.

7. THE RESPONSIBILITY FOR INSTALLATION, ROUTINE INSPECTION AND MAINTENANCE OF EROSION CONTROL SHOULD BE DEFINED AND ASSIGNED TO APPROPRIATE PERSONS(S) PRIOR TO COMMENCEMENT OF ANY SOIL DISTURBANCE TAKING PLACE. DURING ROUTINE INSPECTIONS, DAMAGED OR INOPERATIVE DEVICES SHALL BE REPLACED IMMEDIATELY.

8. IN ORDER TO MINIMIZE EROSION CONTROL PROBLEMS, THE GENERAL CONTRACTOR SHALL COORDINATE WITH EXCAVATOR, LANDSCAPE, AND IRRIGATION CONTRACTOR TO DETERMINE EARLIEST POSSIBLE DATE TO INSTALL GRASSING AS NOTED ON THE LANDSCAPE PLAN.

9. THE SPECIFIC PLANT MATERIALS PROPOSED TO PROTECT FILL AND EXCAVATED SLOPES SHALL BE AS INDICATED ON THE LANDSCAPE PLANS. PLANT MATERIALS MUST BE SUITABLE FOR USE UNDER LOCAL CLIMATE AND SOIL CONDITIONS. IN GENERAL, HYDROSEEDING OR SODDING BERMUDA GRASS IS ACCEPTABLE DURING THE SUMMER MONTHS (MAY 1 - AUGUST 30). WINTER RYE OR FESCUE GRASS MAY BE PLANTED DURING TIMES OTHER THAN THE SUMMER MONTHS AS A TEMPORARY MEASURE UNTIL SUCH TIME AS THE PERMANENT PLANTING CAN BE MADE.

10. TEMPORARY INLET PROTECTION TO BE REMOVED OR ADDED BASED ON EXISTING STORM SEWER REMOVAL AND/OR PROPOSED STORM SEWER CONSTRUCTION. AS INLETS ARE COMPLETED, TEMPORARY SEDIMENT BARRIERS SHALL BE INSTALLED.

11. AT THE COMPLETION OF THE PAVING AND FINAL GRADING, THE DISTURBED AREA(S) SHALL BE VEGETATED IN ACCORDANCE WITH THE PLANS.

12. IN THE EVENT OF A SILT FENCE FAILURE, THE CONTRACTOR SHALL PROVIDE STREET CLEANING ON ADJACENT STREETS AS NECESSARY TO REMOVE EARTHEN MATERIALS CONVEYED FROM THE CONSTRUCTION AREA.

13. THE CONTRACTOR SHALL CONSTRUCT THE WASH-OUT PIT AND CONTAINMENT BASIN IN ACCORDANCE WITH THE STORM WATER POLLUTION PREVENTION PLAN. WHEEL WASHING EQUIPMENT SHALL BE USED TO REMOVE EARTHEN MATERIALS FROM WHEELS OF VEHICLES EXITING THE CONSTRUCTION SITE.

14. SILT FENCE AND INLET SEDIMENT BARRIERS SHALL REMAIN IN PLACE UNTIL VEGETATION HAS BEEN ESTABLISHED.

15. DISTURBED AREAS THAT ARE SEEDED OR SODDED SHALL BE CHECKED PERIODICALLY TO SEE THAT GRASS COVERAGE IS PROPERLY MAINTAINED. DISTURBED AREAS SHALL BE WATERED, FERTILIZED, AND RE-SEEDED OR SODDED, IF NECESSARY.

16. ADEQUATE MEASAURES SHALL BE TAKEN TO PREVENT EROSION. IN THE EVENT THAT EROSION OCCURS AS A RESULT OF CONSTRUCTION, THE CONTRACTOR SHALL RESTORE THE ERODED AREA TO ORIGINAL CONDITION PRIOR TO HYDROMULCHING OR SODDING.

17. THE CONTRACTOR SHALL STABILIZE THE EARTHEN SLOPE AREAS IN ACCORDANCE WITH THE LANDSCAPE PLAN WITHIN 72 HOURS AFTER FINAL GRADE AND TOPSOIL HAS BEEN ESTABLISHED. STABILIZED SLOPES (CURLEX BLANKET AND 70% COVER OF VEGETATION) ACHIEVING EROSION FREE CONDITIONS MUST BE IN PLACE AND EFFECTIVE BY THE PROJECT "POSSESSION DATE".

18. THE CONTRACTOR SHALL REMOVE AND DISPOSE OF ALL EROSION CONTROL MEASURES ONCE FINAL GROUND STABILIZATION IS ACHIEVED.

REVISIONS		
NO.	DATE	DESCRIPTION

GENERAL NOTES

DUNAWAY
118 Broadway•Suite 201• San Antonio, Texas 78205
Tel: 210.267.5246
(TX REG. F-1114)

muñoz
723 S. Flores • San Antonio, Texas 78204
210.349.1163 • www.munoz-co.com

WORLD HERITAGE CENTER
SAN ANTONIO, TEXAS

PRELIMINARY
FOR REVIEW ONLY
These documents are for Design Review and not intended for Construction, Bidding or Permit Purposes. They were prepared by, or under the supervision of:
Bryan Kye Mask
L.A.# 2369

JOB NO.	5675.001
DESIGNED BY:	TLL
DRAWN BY:	DAM
CHECKED BY:	BKM
DATE:	12/01/2021
SHEET:	NOTES

FULL PATH: G:\Production4000\005600\5675\001\PLA\Drawings\95% CD\Plot SheetsG:\Production4000\005600\5675\001\PLA\Drawings\95% CD\Plot Sheets\5675.001-General Notes
FILENAME: 5675.001-General Notes.dwg
PLOTTED BY: Damaris Martinez
PLOTTED ON: Thursday, December 02, 2021
PLOTTED AT: 1:40:11 PM
PLOTTED WITH: DWG To PDF.pc3

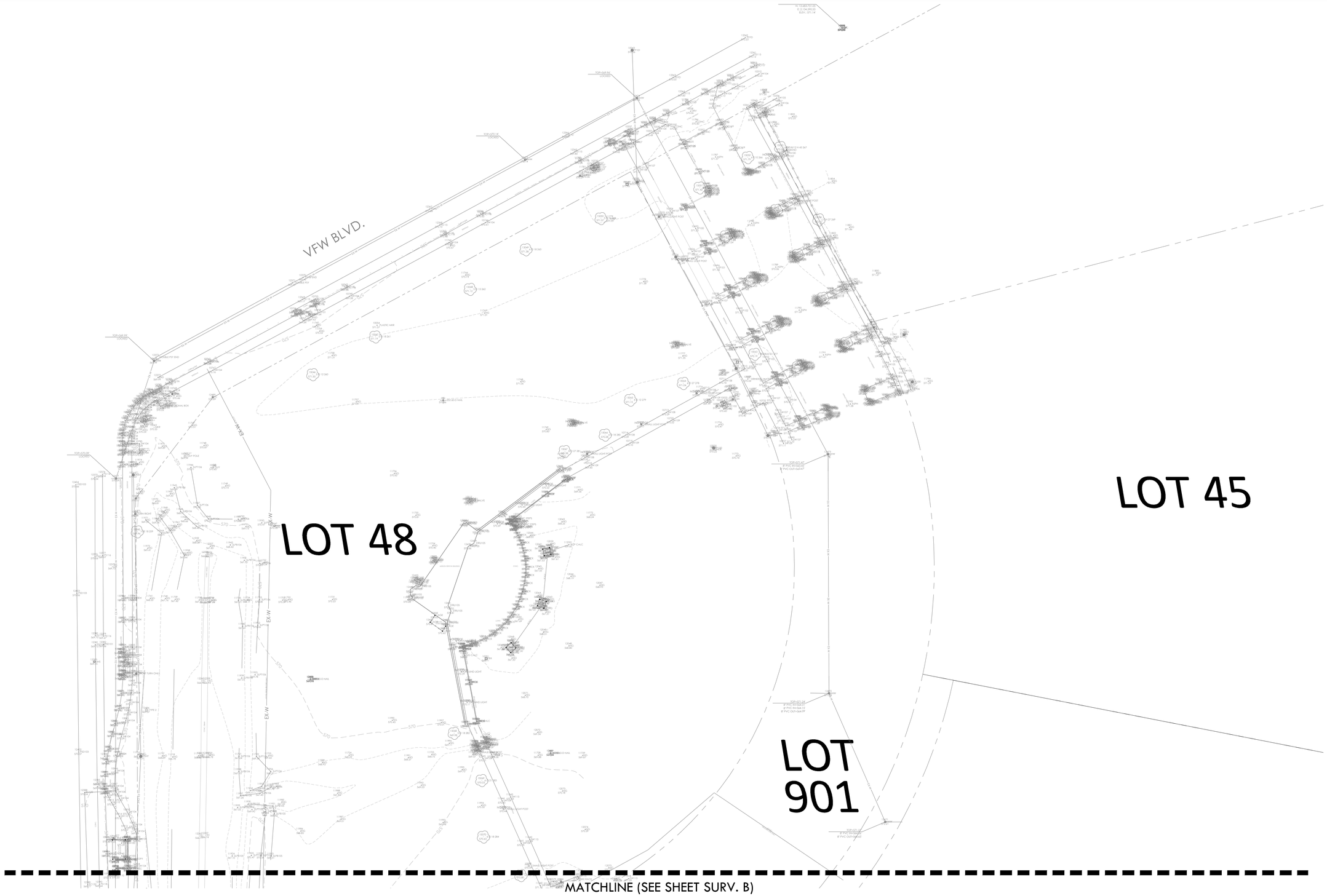

NOTE:
SURVEY PROVIDED BY POZNECKI-CAMARILLO, LLC

NORTH

GRAPHIC SCALE
0 30 60
1 inch = 30'

REVISIONS

NO.	DATE	DESCRIPTION

SITE SURVEY

WORLD HERITAGE CENTER
SAN ANTONIO, TEXAS

DUNAWAY
1118 Broadway • Suite 201 • San Antonio, Texas 78205
Tel. 210.267.0246
TBPELS F-11148

muñoz
723 S. Flores • San Antonio, Texas 78204
210.349.1163 • www.munoz-co.com

PRELIMINARY
FOR REVIEW ONLY
These Drawings are for Design Review and not intended for Construction, Bidding or Permit Purposes.
They were prepared by or under the supervision of:
Bryan Kyle Mask
L.A. # 2369
DATE: 11/22/2021

JOB NO.	5675.001
DESIGNED BY:	TLL
DRAWN BY:	DAM
CHECKED BY:	BKM
DATE:	12/01/2021
SHEET:	SURV. A

FILE PATH: G:\Projects\5600\5650\5675\001\PLAN\Drawings\95% CD\Plot Sheets\5675.001 Survey

FILENAME: 5675.001-Survey.dwg
PLOTTED BY: Dennis Martinez
PLOTTED ON: Thursday, December 02, 2021
PLOTTED AT: 1=40.35 PW
PLOTTED WITH: 1-MAE19.pc3

MATCHLINE (SEE SHEET SURV. A)

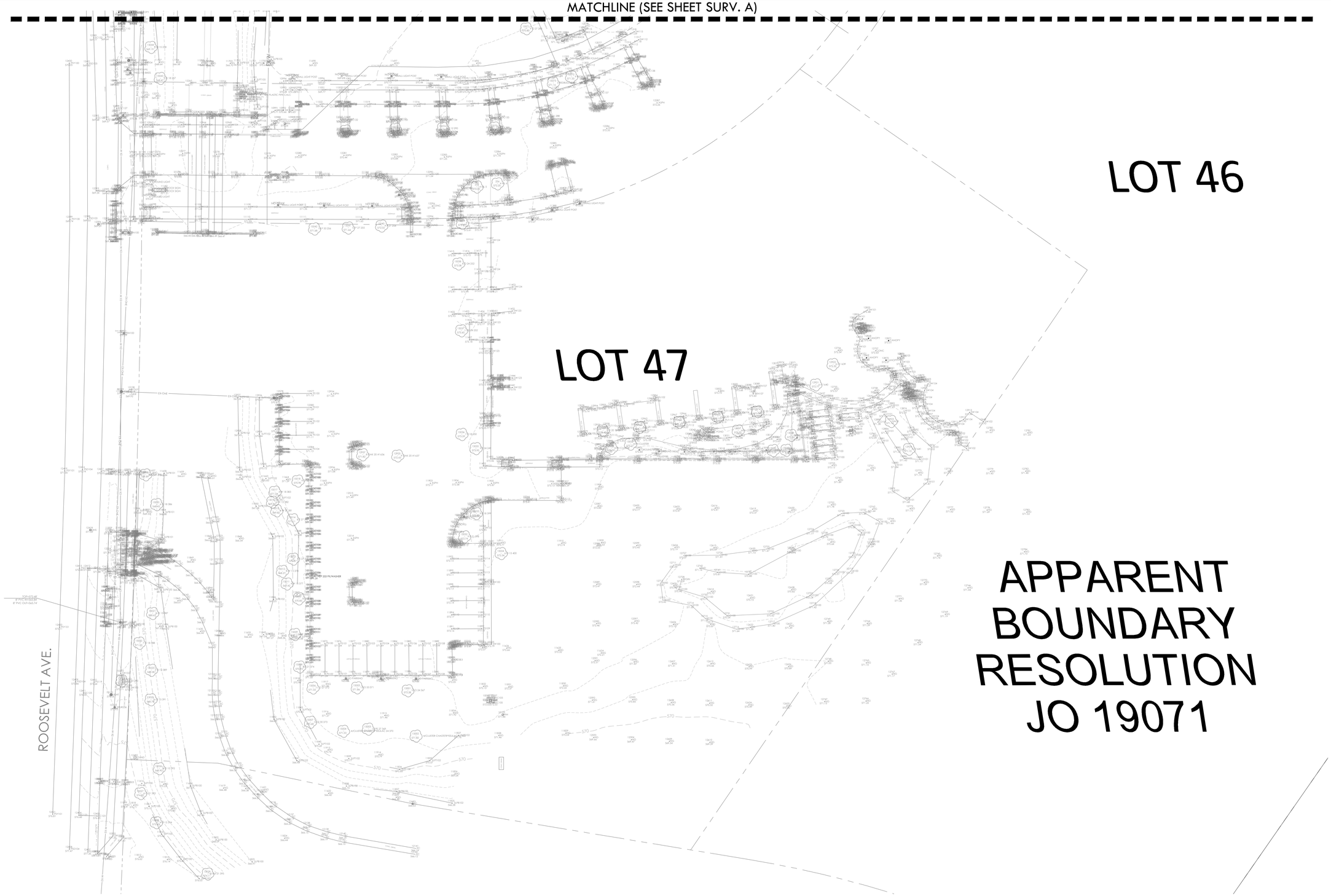

APPARENT BOUNDARY RESOLUTION JO 19071

NOTE:
SURVEY PROVIDED BY POZNECKI-CAMARILLO, LLC

NORTH

GRAPHIC SCALE
0 30 60
1 inch = 30'

REVISIONS		
NO.	DATE	DESCRIPTION

SITE SURVEY

WORLD HERITAGE CENTER
SAN ANTONIO, TEXAS

DUNAWAY
1118 Broadway • Suite 201 • San Antonio, Texas 78205
Tel. 210.267.0246
TBPELS F-11148

muñoz
723 S. Flores • San Antonio, Texas 78204
210.349.1163 • www.munoz-co.com

PRELIMINARY
FOR REVIEW ONLY
THIS DOCUMENT IS PRELIMINARY AND IS FOR REVIEW ONLY. These documents are for Plan Review and Design Review and not intended for Construction, Bidding or Permit Purposes. They were prepared by, or under the supervision of:
Bryan Kye Mask
L.A. # 2369
DATE: 11/22/2021

JOB NO.	5675.001
DESIGNED BY:	TLL
DRAWN BY:	DAM
CHECKED BY:	BKM
DATE:	12/01/2021
SHEET:	SURV. B

FULL PATH: G:\Production\0000\0500\0570\0001\PLAT\Drawings\95% CD\Plat Sheets\SCP1.001-Survey

FILENAME: 5675.001-Survey.dwg
PLOTTED BY: Damaris Martinez
PLOTTED ON: Thursday, November 20, 2021
PLOTTED AT: 1:47:38 PM
PLOTTER NAME: DWG To Pdf.pc3

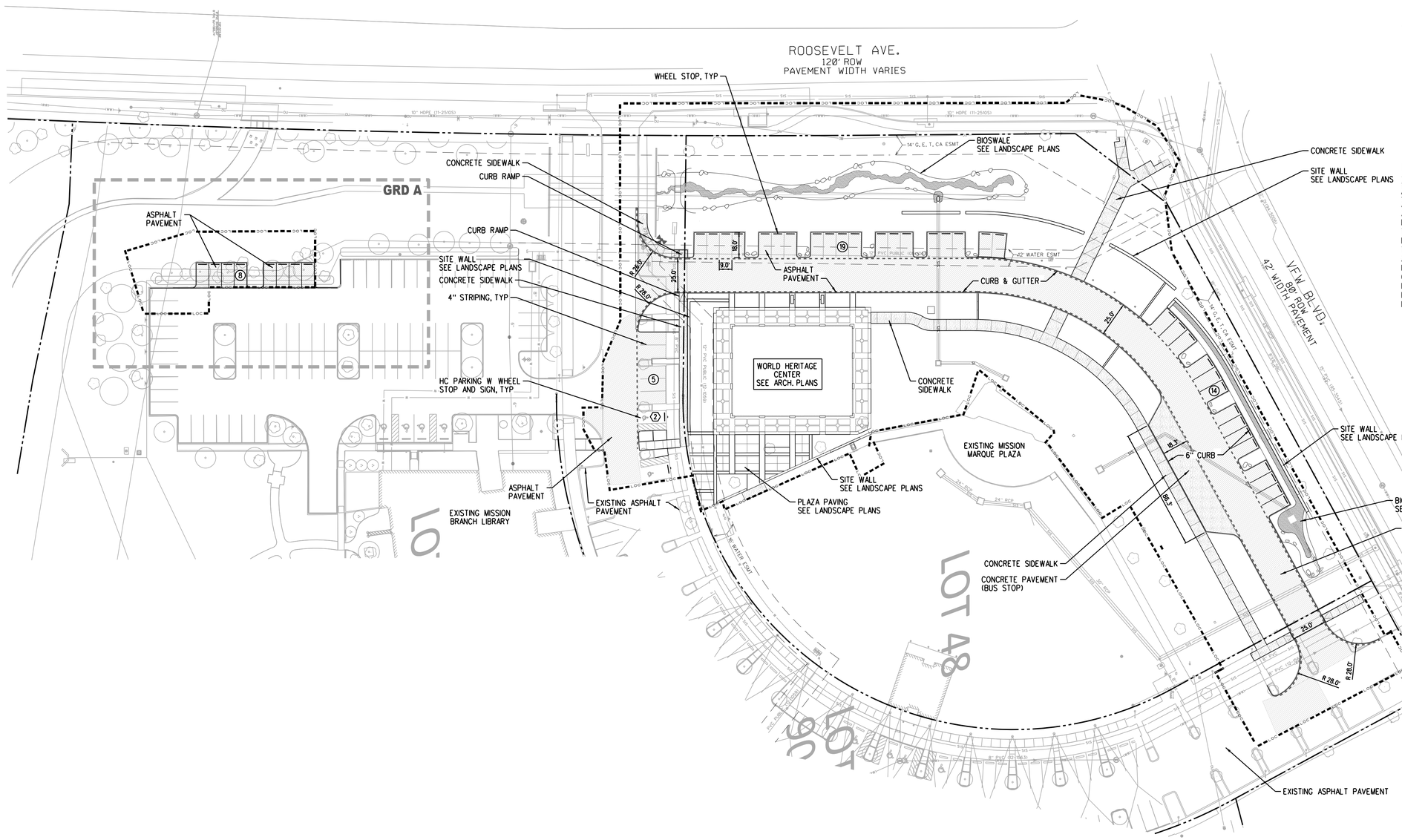

GRAPHIC SCALE

40 0 20 40 80

(IN FEET)

LEGEND

- SITE PLAN BOUNDARY
- ACCESSIBLE ROUTE
- FIRE LANE
- LIMIT OF CONSTRUCTION
- CONCRETE
- ASPHALT PAVEMENT
- ACCESSIBLE PARKING W/ SIGN
- PARKING WHEEL STOP
- CURB RAMP
- FINISH FLOOR ELEVATION
- NUMBER OF PARKING SPACES (STANDARD)
- NUMBER OF PARKING SPACES (HC)

NOTES

THE LOCATION OF EXISTING UTILITIES AND STORM SEWER SHOWN ON PLANS WERE TAKEN FROM THE CITY OF SAN ANTONIO RECORDS WHICH MAY NOT BE COMPLETE AND/OR ACCURATE. THEREFORE, THE PRESENCE, LOCATION AND ELEVATION OF EXISTING UTILITIES AND STORM SEWER IN THE FIELD SHALL BE VERIFIED BY THE CONTRACTOR BEFORE COMMENCING WORK. IT SHALL BE THE DUTY OF THE CONTRACTOR TO ASCERTAIN WHETHER ANY ADDITIONAL FACILITIES OTHER THAN THOSE SHOWN ON THE PLANS MAY BE PRESENT. FAILURE OF AN EXISTING UTILITY OR STORM SEWER TO APPEAR ON THE PLANS OR RECORDS SHALL NOT RELIEVE THE CONTRACTOR OF THEIR RESPONSIBILITY TO PROTECT AND REPAIR, IF THEY DAMAGE, SUCH UTILITIES AND STORM SEWER.

PARKING TABLE:

TYPE	PROVIDED
STANDARD PARKING (9' x 18')	46
HANDICAPPED PARKING (ADA) (9' x 18')	2
TOTAL	48

REVISIONS		
NO.	DATE	DESCRIPTION

DUNAWAY
TBPE No. F-1114 TBPLS No. 10065900
5707 Southwest Parkway Building 2, Suite 250
Austin, TX 78735
512.306.8292

muñoz

SITE PLAN

WORLD HERITAGE CENTER
SAN ANTONIO, TX

PRELIMINARY DESIGN DOCUMENT

THIS DOCUMENT IS RELEASED FOR THE PURPOSE OF INTERIM REVIEW UNDER THE AUTHORITY OF MICHAEL C. MULLONE, P.E. 127850. IT IS NOT TO BE USED FOR CONSTRUCTION, BIDDING, OR FINAL PERMIT PURPOSES.

12/2/2021

JOB NO.

DESIGNED BY:

DRAWN BY:

CHECKED BY:

DATE:

SHEET:

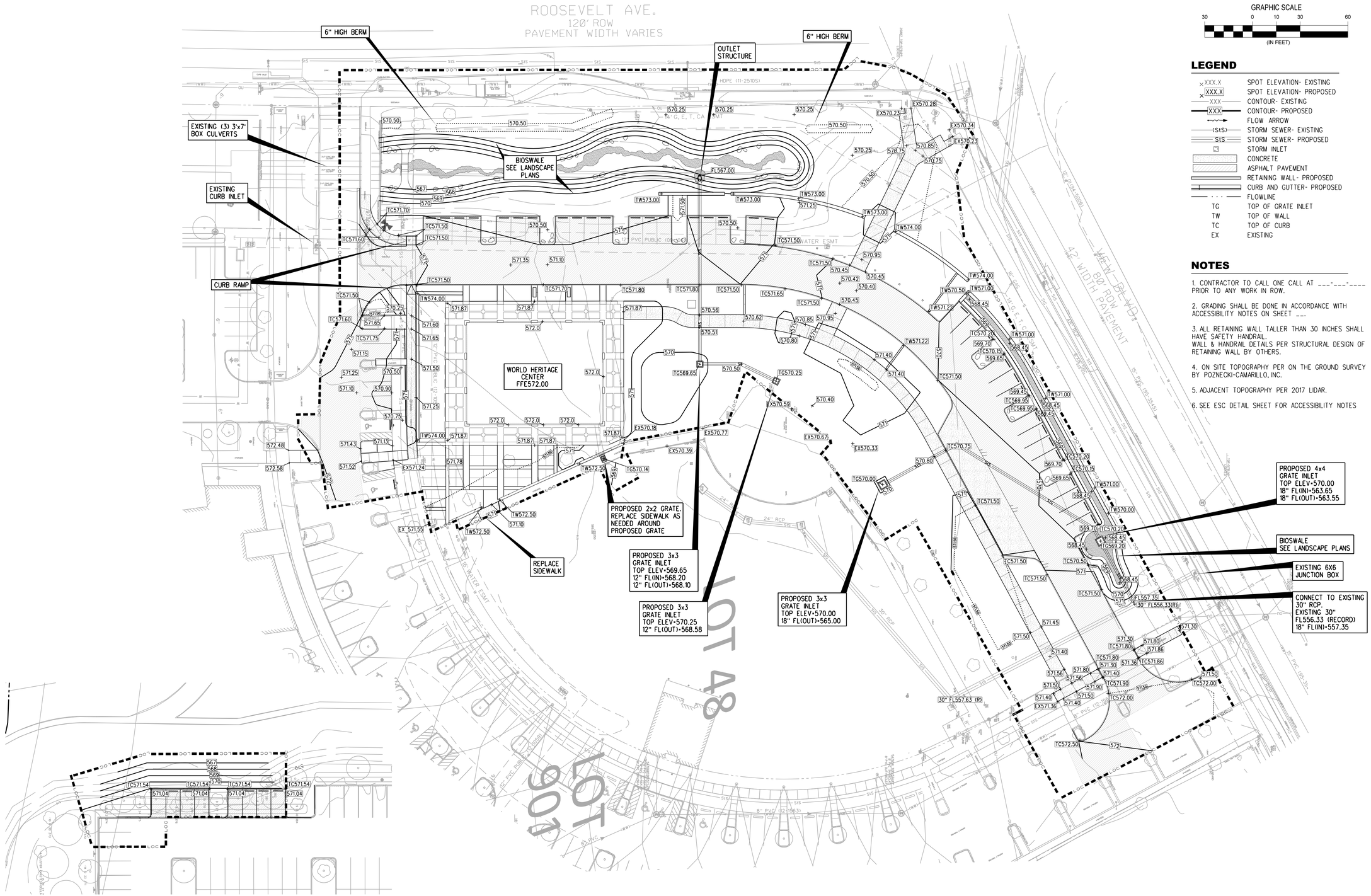

A GRADING
SCALE: 1" = 30'

GRAPHIC SCALE
30 0 10 30 60
(IN FEET)

LEGEND

XXX.X	SPOT ELEVATION- EXISTING
XXX.X	SPOT ELEVATION- PROPOSED
XXX	CONTOUR- EXISTING
XXX	CONTOUR- PROPOSED
	FLOW ARROW
(SIS)	STORM SEWER- EXISTING
SIS	STORM SEWER- PROPOSED
	STORM INLET
	CONCRETE
	ASPHALT PAVEMENT
	RETAINING WALL- PROPOSED
	CURB AND GUTTER- PROPOSED
	FLOWLINE
TG	TOP OF GRATE INLET
TW	TOP OF WALL
TC	TOP OF CURB
EX	EXISTING

NOTES

1. CONTRACTOR TO CALL ONE CALL AT ___-___-____ PRIOR TO ANY WORK IN ROW.

2. GRADING SHALL BE DONE IN ACCORDANCE WITH ACCESSIBILITY NOTES ON SHEET __.

3. ALL RETAINING WALL TALLER THAN 30 INCHES SHALL HAVE SAFETY HANDRAIL.
WALL & HANDRAIL DETAILS PER STRUCTURAL DESIGN OF RETAINING WALL BY OTHERS.

4. ON SITE TOPOGRAPHY PER ON THE GROUND SURVEY BY POZNECKI-CAMARILLO, INC.

5. ADJACENT TOPOGRAPHY PER 2017 LIDAR.

6. SEE ESC DETAIL SHEET FOR ACCESSIBILITY NOTES

REVISIONS		
NO.	DATE	DESCRIPTION

GRADING AND DRAINAGE PLAN

WORLD HERITAGE CENTER
SAN ANTONIO, TX

DUNAWAY
TBPE No. F-1114 TBPLS No. 10065900
5707 Southwest Parkway | Building 2, Suite 250
Austin, TX 78735
512.306.8292

muñoz

PRELIMINARY DESIGN DOCUMENT

THIS DOCUMENT IS RELEASED FOR THE PURPOSE OF INTERIM REVIEW UNDER THE AUTHORITY OF MICHAEL C. MULLONE, P.E. 127850. IT IS NOT TO BE USED FOR CONSTRUCTION, BIDDING, OR FINAL PERMIT PURPOSES.

12/2/2021

JOB NO.

DESIGNED BY:

DRAWN BY:

CHECKED BY:

DATE:

SHEET:

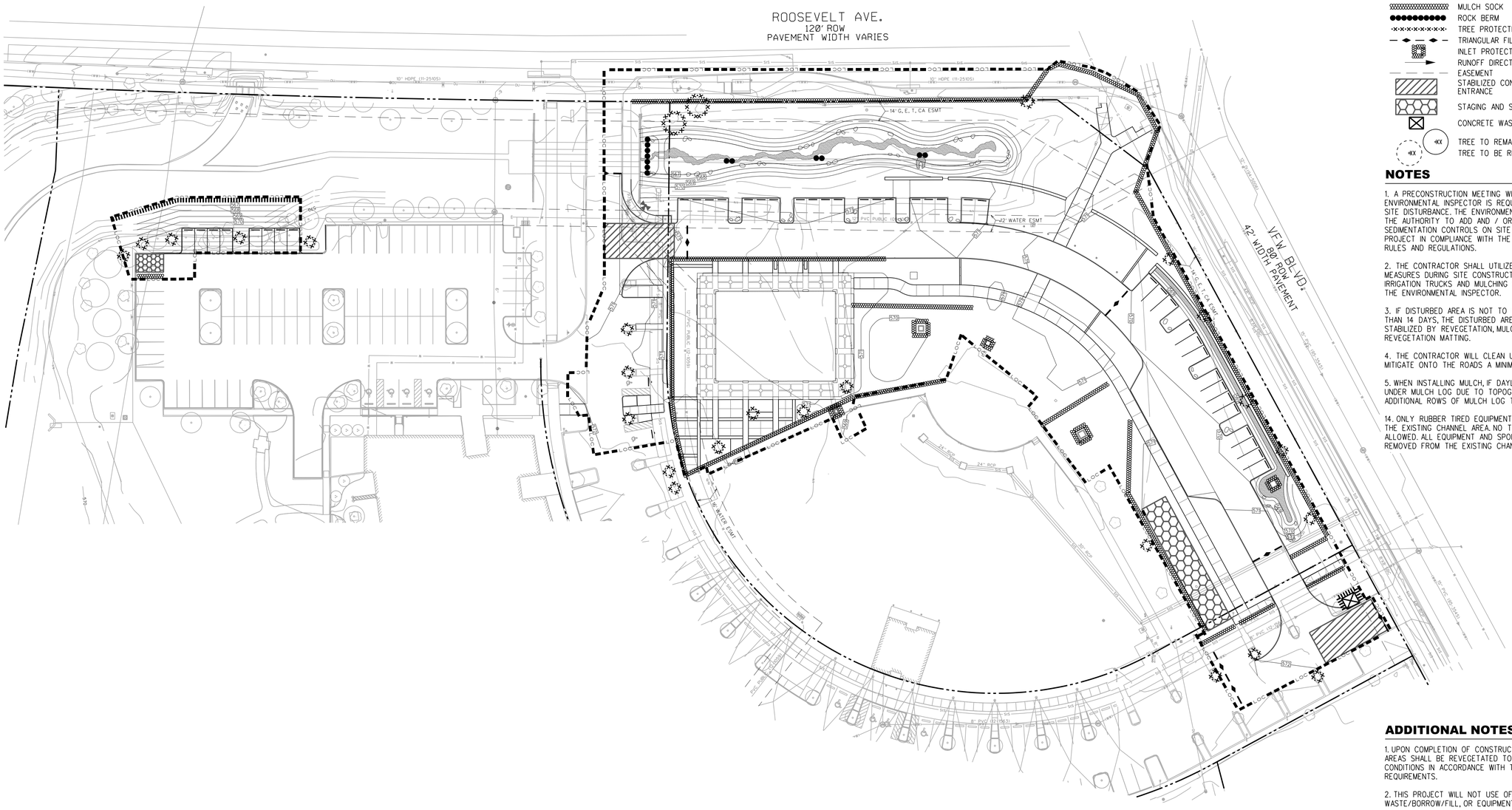

GRAPHIC SCALE

40 0 20 40 80

(IN FEET)

LEGEND

- SITE BOUNDARY
- LIMITS OF CONSTRUCTION
- SILT FENCE
- MULCH SOCK
- ROCK BERM
- TREE PROTECTION
- TRIANGULAR FILTER DIKE
- INLET PROTECTION
- RUNOFF DIRECTION
- EASEMENT
- STABILIZED CONSTRUCTION ENTRANCE
- STAGING AND STORAGE AREA
- CONCRETE WASHOUT PIT
- TREE TO REMAIN
- TREE TO BE REMOVED

NOTES

1. A PRECONSTRUCTION MEETING WITH THE ENVIRONMENTAL INSPECTOR IS REQUIRED PRIOR TO ANY SITE DISTURBANCE. THE ENVIRONMENTAL INSPECTOR HAS THE AUTHORITY TO ADD AND / OR MODIFY EROSION / SEDIMENTATION CONTROLS ON SITE TO KEEP THE PROJECT IN COMPLIANCE WITH THE CITY OF SAN ANTONIO RULES AND REGULATIONS.

2. THE CONTRACTOR SHALL UTILIZE DUST CONTROL MEASURES DURING SITE CONSTRUCTION SUCH AS IRRIGATION TRUCKS AND MULCHING OR AS DIRECTED BY THE ENVIRONMENTAL INSPECTOR.

3. IF DISTURBED AREA IS NOT TO BE WORKED FOR MORE THAN 14 DAYS, THE DISTURBED AREA NEEDS TO BE STABILIZED BY REVEGETATION, MULCH, TARP OR REVEGETATION MATTING.

4. THE CONTRACTOR WILL CLEAN UP SPOILS THAT MITIGATE ONTO THE ROADS A MINIMUM OF ONCE DAILY.

5. WHEN INSTALLING MULCH, IF DAYLIGHT CAN BE SEEN UNDER MULCH LOG DUE TO TOPOGRAPHIC CHANGES, ADD ADDITIONAL ROWS OF MULCH LOG TO CLOSE GAPS

14. ONLY RUBBER TIRED EQUIPMENT IS ALLOWED WITHIN THE EXISTING CHANNEL AREA. NO TRACK EQUIPMENT IS ALLOWED. ALL EQUIPMENT AND SPOILS ARE TO BE REMOVED FROM THE EXISTING CHANNEL AREA NIGHTLY.

ADDITIONAL NOTES

1. UPON COMPLETION OF CONSTRUCTION ALL DISTURBED AREAS SHALL BE REVEGETATED TO 70% OF EXISTING CONDITIONS IN ACCORDANCE WITH THE SWPPP AND TPDES REQUIREMENTS.

2. THIS PROJECT WILL NOT USE OFF-SITE MATERIAL, WASTE/BORROW/FILL, OR EQUIPMENT STORAGE AREAS.

3. THIS SITE IS NOT LOCATED ADJACENT TO ANY SURFACE WATERS.

4. THIS SITE WILL NOT HAVE ANY LOCATIONS WHERE STORM WATER DISCHARGES DIRECTLY TO A SURFACE WATER BODY.

REVISIONS		
NO.	DATE	DESCRIPTION

EROSION, SEDIMENTATION, AND TREE PROTECTION PLAN

DUNAWAY
TBPE No. F-1114 TBPLS No. 10065900
5707 Southwest Parkway | Building 2, Suite 250
Austin, TX 78735
512.306.8292

muñoz

WORLD HERITAGE CENTER
SAN ANTONIO, TX

PRELIMINARY DESIGN DOCUMENT

THIS DOCUMENT IS RELEASED FOR THE PURPOSE OF INTERIM REVIEW UNDER THE AUTHORITY OF MICHAEL C. MULLONE, P.E. 127850. IT IS NOT TO BE USED FOR CONSTRUCTION, BIDDING, OR FINAL PERMIT PURPOSES.

12/2/2021

JOB NO.	
DESIGNED BY:	
DRAWN BY:	
CHECKED BY:	
DATE:	
SHEET:	

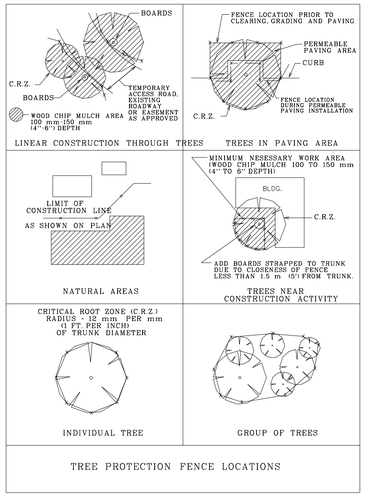

TREE PROTECTION FENCE LOCATIONS

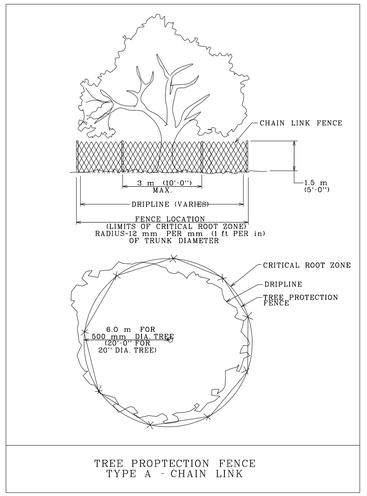

TREE PROPTECTION FENCE
TYPE A - CHAIN LINK

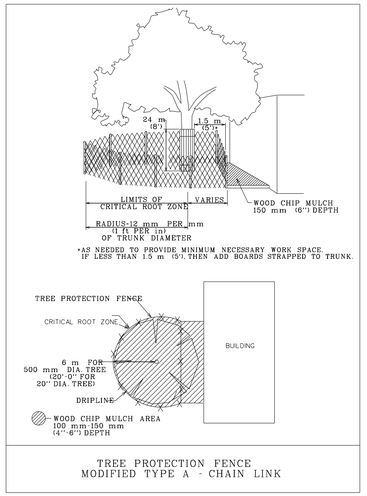

TREE PROTECTION FENCE
MODIFIED TYPE A - CHAIN LINK

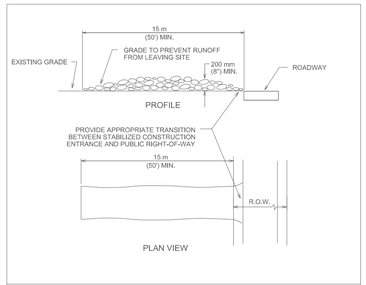

NOTES:
1. STONE SIZE: 75-125 mm (3-5") OPEN GRADED ROCK.
2. LENGTH: AS EFFECTIVE BUT NOT LESS THAN 15 m (50').
3. THICKNESS: NOT LESS THAN 200 mm (8").
4. WIDTH: NOT LESS THAN FULL WIDTH OF ALL POINTS OF INGRESS/EGRESS.
5. WASHING: WHEN NECESSARY, VEHICLE WHEELS SHALL BE CLEANED TO REMOVE SEDIMENT PRIOR TO ENTRANCE ONTO PUBLIC ROADWAY. WHEN WASHING IS REQUIRED, IT SHALL BE DONE ON AN AREA STABILIZED WITH CRUSHED STONE AND DRAINS INTO AN APPROVED TRAP OR SEDIMENT BASIN. ALL SEDIMENT SHALL BE PREVENTED FROM ENTERING ANY STORM DRAIN, DITCH OR WATERCOURSE USING APPROVED METHODS.
6. MAINTENANCE: THE ENTRANCE SHALL BE MAINTAINED IN A CONDITION THAT WILL PREVENT TRACKING OR FLOWING OF SEDIMENT ONTO PUBLIC ROADWAY. THIS MAY REQUIRE PERIODIC TOP DRESSING WITH ADDITIONAL STONE AS CONDITIONS DEMAND. AS WELL AS REPAIR AND CLEAN OUT OF ANY MEASURE DEVICES USED TO TRAP SEDIMENT. ALL SEDIMENTS THAT IS SPILLED, DROPPED, WASHED OR TRACKED ONTO PUBLIC ROADWAY MUST BE REMOVED IMMEDIATELY.
7. DRAINAGE: ENTRANCE MUST BE PROPERLY GRADED OR INCORPORATE A DRAINAGE SWALE TO PREVENT RUNOFF FROM LEAVING THE CONSTRUCTION SITE.

STABILIZED CONSTRUCTION ENTRANCE

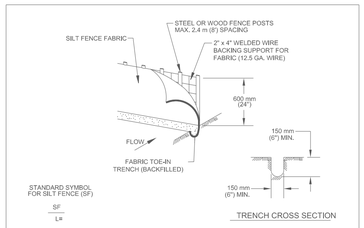

1. STEEL OR WOOD POSTS WHICH SUPPORT THE SILT FENCE SHALL BE INSTALLED ON A SLIGHT ANGLE TOWARD THE ANTICIPATED RUNOFF SOURCE. POST MUST BE EMBEDDED A MINIMUM OF 300 mm (12 INCHES). IF WOOD POSTS CANNOT ACHIEVE 300 mm (12 inches) DEPTH, USE STEEL POSTS.

2. THE TOE OF THE SILT FENCE SHALL BE TRENCHED IN WITH A SPADE OR MECHANICAL TRENCHER, SO THAT THE DOWNSLOPE FACE OF THE TRENCH IS FLAT AND PERPENDICULAR TO THE LINE OF FLOW.

3. THE TRENCH MUST BE A MINIMUM OF 150 mm (6 inches) DEEP AND 150 mm (6 inches) WIDE TO ALLOW FOR THE SILT FENCE FABRIC TO BE LAID IN THE GROUND AND BACKFILLED WITH COMPACTED MATERIAL.

4. SILT FENCE FABRIC SHOULD BE SECURELY FASTENED TO EACH STEEL OR WOOD SUPPORT POST OR TO WOVEN WIRE , WHICH IS IN TURN ATTACHED TO THE STEEL OR WOOD FENCE POST.

5. INSPECTION SHALL BE MADE WEEKLY OR AFTER EACH RAINFALL EVENT AND REPAIR OR REPLACEMENT SHALL BE MADE PROMPTY AS NEEDED.

6. SILT FENCE SHALL BE REMOVED WHEN THE SITE IS COMPLETELY STABILIZED SO AS NOT TO BLOCK OR IMPEDE STORM FLOW OR DRAINAGE.

7. ACCUMULATED SILT SHALL BE REMOVED WHEN IT REACHES A DEPTH OF 150 mm (6 inches). THE SILT SHALL BE DISPOSED OF ON AN APPROVED SITE AND IN SUCH A MANNER THAT WILL NOT CONTRIBUTE TO ADDITIONAL SILTATION.

SILT FENCE

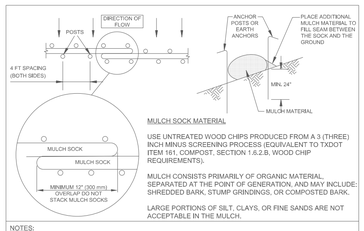

MULCH SOCK MATERIAL

USE UNTREATED WOOD CHIPS PRODUCED FROM A 3 (THREE) INCH MINUS SCREENING PROCESS (EQUIVALENT TO TXDOT ITEM 161, COMPOST, SECTION 1.6.2.B, WOOD CHIP REQUIREMENTS).

MULCH CONSISTS PRIMARILY OF ORGANIC MATERIAL, SEPARATED AT THE POINT OF GENERATION, AND MAY INCLUDE: SHREDDED BARK, STUMP GRINDINGS, OR COMPOSTED BARK.

LARGE PORTIONS OF SILT, CLAYS, OR FINE SANDS ARE NOT ACCEPTABLE IN THE MULCH.

NOTES:

1. STEEL OR WOOD POSTS WHICH SUPPORT THE MULCH SOCK SHALL BE INSTALLED ON A SLIGHT ANGLE TOWARD THE ANTICIPATED RUNOFF SOURCE. POST MUST BE EMBEDDED A MINIMUM OF 600mm (24 inches). IF WOOD POSTS CANNOT ACHIEVE 600mm (24 inches) DEPTH, USE STEEL POSTS. EARTH ANCHORS ARE ALSO ACCEPTABLE.

2. THE TOE OF THE MULCH SOCK SHALL BE PLACED SO THAT THE MULCH SOCK IS FLAT AND PERPENDICULAR TO THE LINE OF FLOW. IN ORDER TO PREVENT WATER FROM FLOWING BETWEEN THE JOINTS OF ADJACENT ENDS OFMULCH SOCKS, LAP THE ENDS OF ADJACENT MULCH SOCKS A MINIMUM OF 300mm (12 inches).

3. MULCH MATERIAL MUST BE FREE OF REFUSE, PHYSICAL CONTAMINANTS, AND MATERIAL TOXIC TO PLANT GROWTH. IT IS NOT ACCEPTABLE FOR THE MULCH MATERIAL TO CONTAIN GROUND CONSTRUCTION DEBRIS, BIOSOLIDS, OR MANURE.

4. SOCK MATERIAL WILL BE 100% BIODEGRADABLE, PHOTODEGRADABLE, OR RECYCLABLE SUCH AS BURLAP, TWINE, UV PHOTOBIOEDGRADABLE PLASTIC, POLYESTER, OR ANY OTHER ACCEPTABLE MATERIAL.

5. MULCH SOCKS SHOULD BE USED AT THE BASE OF SLOPES NO STEEPER THAN 2:1 AND SHOULD NOT EXCEED THE MAXIMUM SPACING CRITERIA FOR A GIVEN SLOPE CATEGORY.

6. ACCUMULATED SILT SHALL BE REMOVED WHEN IT REACHES A DEPTH OF 6 inches. THE SILT SHALL BE DISPOSED OF ON AN APPROVED SITE AND IN SUCH A MANNER THAT WILL NOT CONTRIBUTE TO ADDITIONAL SILTATION.

MULCH SOCK

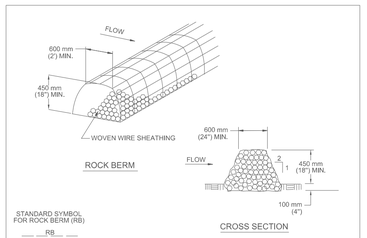

NOTES:

1. USE ONLY OPEN GRADED ROCK 75 to 125 mm (3 to 5") DIAMETER FOR ALL CONDITIONS.
2. THE ROCK BERM SHALL BE SECURED WITH A WOVEN WIRE SHEATHING HAVING MAXIMUM 25 mm (1") OPENING AND MINIMUM WIRE DIAMETER OF 12.9 mm (20 GAUGE).
3. THE ROCK BERM SHALL BE INSPECTED DAILY OR AFTER EACH RAIN, AND THE STONE AND/OR FABRIC CORE-WOVEN SHEATHING SHALL BE REPLACED WHEN THE STRUCTURE CEASES TO FUNCTION AS INTENDED. DUE TO SEDIMENT ACCUMULATION AMONG THE ROCKS, WASHOUT, CONSTRUCTION TRAFFIC DAMAGE, ETC.
4. IF SEDIMENT REACHES A DEPTH EQUAL TO ONE-THIRD THE HEIGHT OF THE BERM OR 150 mm (6"), WHICHEVER IS LESS, THE SEDIMENT SHALL BE REMOVED AND DISPOSED OF ON AN APPROVED SITE AND IN A MANNER THAT WILL NOT CREATE A SEDIMENTION PROBLEM.
5. WHEN THE SITE IS COMPLETELY STABILIZED, THE BERM AND ACCUMULATED SEDIMENT SHALL BE REMOVED AND DISPOSED OF IN AN APPROVED MANNER.

ROCK BERM

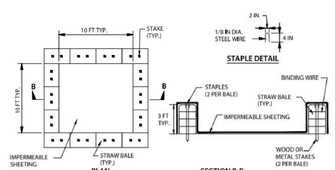

NOTE: CAN BE TWO STACKED BALES OR PARTIALLY EXCAVATED TO REACH 3 FT DEPTH

WASHOUT STRUCTURE WITH STRAW BALES

CONSTRUCTION SPECIFICATIONS

1. LOCATE WASHOUT STRUCTURE A MINIMUM OF 50 FEET AWAY FROM OPEN CHANNELS, STORM DRAIN INLETS, SENSITIVE AREAS, WETLANDS, BUFFERS AND WATER COURSES AND AWAY FROM CONSTRUCTION TRAFFIC.
2. SIZE WASHOUT STRUCTURE FOR VOLUME NECESSARY TO CONTAIN WASH WATER AND SOLIDS AND MAINTAIN AT LEAST 4 INCHES OF FREEBOARD. TYPICAL DIMENSIONS ARE 10 FEET X 10 FEET X 3 FEET DEEP.
3. PREPARE SOIL BASE FREE OF ROCKS OR OTHER DEBRIS THAT MAY CAUSE TEARS OR HOLES IN THE LINER. FOR LINER, USE 10 MIL OR THICKER UV RESISTANT, IMPERMEABLE SHEETING, FREE OF HOLES AND TEARS OR OTHER DEFECTS THAT COMPROMISE IMPERMEABILITY OF THE MATERIAL.
4. PROVIDE A SIGN FOR THE WASHOUT IN CLOSE PROXIMITY TO THE FACILITY.
5. KEEP CONCRETE WASHOUT STRUCTURE WATER TIGHT. REPLACE IMPERMEABLE LINER IF DAMAGED (E.G., RIPPED OR PUNCTURED). EMPTY OR REPLACE WASHOUT STRUCTURE THAT IS 75 PERCENT FULL, AND DISPOSE OF ACCUMULATED MATERIAL PROPERLY. DO NOT REUSE PLASTIC LINER. WET VACUUM STORED LIQUIDS THAT HAVE NOT EVAPORATED AND DISPOSE OF IN AN APPROVED MANNER. PRIOR TO FORECASTED RAINSTORMS, REMOVE LIQUIDS OR COVER STRUCTURE TO PREVENT OVERFLOWS. REMOVE HARDENED SOLIDS, WHOLE OR BROKEN UP, FOR DISPOSAL OR RECYCLING. MAINTAIN RUNOFF DIVERSION AROUND EXCAVATED WASHOUT STRUCTURE UNTIL STRUCTURE IS REMOVED.

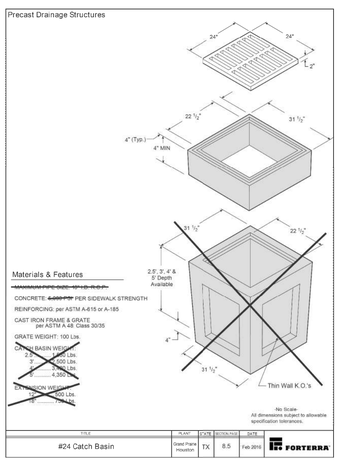

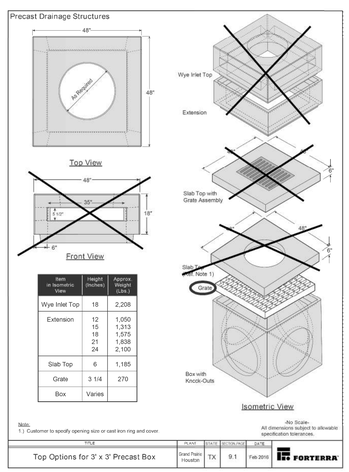

Item in Isometric View	Height (inches)	Approx Weight (Lbs.)
Wye Inlet Top	18	2,208
Extension	12 15 18 21 24	1,050 1,313 1,575 1,838 2,100
Slab Top	6	1,185
Grate	3 1/4	270
Box	Varies	

ACCESSIBILITY SITE NOTES

SITE GRADING SHALL COMPLY WITH THE TEXAS ACCESSIBILITY STANDARDS EXISTING AT THE TIME OF PLAN APPROVAL. GRADING SHOWN ON THE PLANS IS INTENDED TO COMPLY WITH SUCH STANDARDS AND SHOULD THE CONTRACTOR DETERMINE THAT COMPLIANCE WITH THE STANDARDS IS NOT CONSISTENT WITH THE SITE PLAN OR ELEVATIONS, HE/SHE SHALL NOTIFY THE ENGINEER IMMEDIATELY FOR A REMEDY.

ACCESSIBLE ROUTES (SIDEWALKS, PATHS, ETC)

1. THE MAXIMUM SLOPE OF A RAMP IN NEW CONSTRUCTION IS 1:12. THE MAXIMUM RISE FOR ANY RAMP RUN IS 30 IN. THE MAXIMUM HORIZONTAL PROJECTION IS 30 FEET FOR A RAMP WITH A SLOPE BETWEEN 1:12 AND 1:15, AND 40 FEET FOR A RAMP WITH A SLOPE BETWEEN 1:16 AND 1:20.

2. CROSS SLOPE SHALL NOT EXCEED 1:50 (2%).

3. GROUND SURFACES SHALL BE RELATIVELY FIRM, STABLE AND SMOOTH. GRANITE PATHS WHERE SHOWN ON THE PLANS SHALL BE SUFFICIENTLY COMPACTED.

4. CHANGES IN LEVEL SHALL NOT EXCEED 1/2 ". 1/2 " CHANGE IN LEVEL MUST HAVE A BEVELED EDGE OF 1:2. 1/4 " CHANGE IN LEVEL OR LESS DOES NOT HAVE TO PROVIDE A BEVELED EDGE.

5. MANEUVERING CLEARANCE (60") AT ACCESSIBLE ENTRANCES SHALL NOT EXCEED 1:50 (2% SLOPE).

6. A 60" X 60" PASSING SPACE SHALL BE PROVIDED EVERY 200' ALONG AN ACCESSIBLE ROUTE.

PARKING

1. SLOPE IN ACCESSIBLE PARKING AREAS (PARKING SPACE AND ACCESS AISLE) SHALL NOT EXCEED 1:50 (2%) SLOPE IN ALL DIRECTIONS.

2. EACH ACCESSIBLE PARKING SPACE SHALL PROVIDE AN ADJACENT ACCESS AISLE (5' FOR STANDARDS ACCESSIBLE SPACES AND 8' FOR VAN ACCESSIBLE SPACES).

3. EVERY ACCESSIBLE PARKING SPACE MUST BE IDENTIFIED BY A SIGN, CENTERED AT THE HEAD OF THE PARKING SPACE. THE SIGN MUST INCLUDE THE INTERNATIONAL SYMBOL OF ACCESSIBILITY AND STATE "RESERVED", OR OTHER EQUIVALENT LANGUAGE. CHARACTERS AND SYMBOLS ON SUCH SIGNS MST BE LOCATED 60" MINIMUM ABOVE THE GROUND SO THAT THEY CANNON BE OBSCURED BY A VEHICLE PARKED IN THE SPACE.

4. WHERE THE ACCESSIBLE ROUTE PASSES IN FRONT OF VEHICLES, WHEEL STOPS SHALL BE PROVIDED TO PREVENT VEHICLES FROM PULLING UP AND BLOCKING THE ACCESSIBLE ROUTE. ENOUGH SPACE SHALL BE ALLOWED TO MAINTAIN A MINIMUM OF 36" WIDE ACCESSIBLE ROUTE.

CURB RAMPS

1. SLOPE SHALL NOT EXCEED 1:12 (8.3%). FLARED SIDES SHALL NOT EXCEED 1:10. CROSS SLOPE SHALL TO EXCEED 1:50 (2%).

2. FULL WIDTH AND DEPTH OF CURB RAMP SURFACES SHALL PROVIDE A CONTRASTING LIGHT REFLECTIVE VALUE (COLOR) AND TEXTURE. TEXTURE MAY CONSIST OF TRUNCATED DOMES OR 3/4 " WIDE GROOVES, 1/4 " DEEP AND 2" APART. COLOR SHALL CONTRAST AT LEAST 70% FROM ADJACENT SURFACES.

3. MINIMUM RAMP WIDTH SHALL BE 36".

4. WHERE AN ACCESSIBLE ROUTE CROSSES A CURB RAMP, IT SHALL CIRCUMVENT THE CURB RAMP SO AS TO NOT REQUIRE THE USER TO CROSS OVER THE CURB RAMP.

5. CURB RAMPS ARE NOT PERMITTED TO PROJECT INTO THE ACCESSIBLE PARKING ACCESS AISLES.

6. TRANSITIONS FROM GUTTER OR STREET TO CURB RAMPS SHALL BE FLUSH.

OTHER RAMPS

1. MAXIMUM SLOPE SHALL BE 1:12 (8.3%).

2. RAMPS OVER 6' IN LENGTH REQUIRE HANDRAILS ON BOTH SIDES.

3. HANDRAIL HEIGHT SHALL BE 34" - 36" ABOVE RAMP SURFACE.

4. HANDRAIL DIAMETER - 1.25" TO 1.5".

5. EDGE PROTECTION IS REQUIRED WHERE DROP OFFS OCCUR.

6. 12" MINIMUM HANDRAIL EXTENSIONS ARE REQUIRED AT LANDINGS, EXCEPT WHERE HANDRAILS ARE CONTINUOUS. HANDRAIL EXTENSIONS SHALL EXTEND IN THE SAME DIRECTION AS THE RAMP.

7. MAXIMUM RUN BETWEEN LANDINGS SHALL BE 30'.

8. 60" LEVEL (2% MAX. SLOPE) LANDINGS REQUIRED AT TOP AND BOTTOM OF EACH RUN. A 60" X 60" LANDING REQUIRED WHERE A RAMP CHANGES DIRECTION.

NO.	DATE	DESCRIPTION

REVISIONS

EROSION, SEDIMENTATION, AND TREE PROTECTION DETAILS

DUNAWAY
TBPE No. F-1114 TBPLS No. 10065900
5707 Southwest Parkway Building 2, Suite 250
Austin, TX 78735
512.306.8292

muñoz

WORLD HERITAGE CENTER
SAN ANTONIO, TX

PRELIMINARY DESIGN DOCUMENT

THIS DOCUMENT IS RELEASED FOR THE PURPOSE OF INTERIM REVIEW UNDER THE AUTHORITY OF MICHAEL C. MULLONE, P.E. 127850. IT IS NOT TO BE USED FOR CONSTRUCTION, BIDDING, OR FINAL PERMIT PURPOSES.

12/2/2021

JOB NO.

DESIGNED BY:

DRAWN BY:

CHECKED BY:

DATE:

SHEET:

BUILDING CODE ANALYSIS

APPLICABLE CODES		
	2018 INTERNATIONAL BUILDING CODE	
	2018 INTERNATIONAL RESIDENTIAL CODE	
	2018 INTERNATIONAL EXISTING BUILDING CODE	
	2018 INTERNATIONA MECHANICAL CODE	
	2018 INTERNATIONAL PLUMBING CODE	
	2018 INTERNATIONAL FIRE CODE (WITH LOCAL AMENDMENTS)	
	2018 INTERNATIONAL ENERGY CONSERVATION CODES	
	2017 NATIONAL ELECTRIC CODE	
	NEW CHAPTER 10 BUILDING RELATED CODES	
	2012 TEXAS ACCESSIBILITY STANDARDS	
PROJECT DESCRIPTION		
	NEW WORLD HERITAGE CENTER	
USE & OCCUPANCY CLASSIFICATION		
ASSEMBLY EXHIBIT SPACE	A-3	IBC 2018 SECTION 303.4
CONSTRUCTION CLASSIFICATION		
	TYPE IIB	
BUILDING AREA		
	5,672 GSF	
BUILDING HEIGHT		
	1 STORY (28'-0")	
OCCUPANT LOAD		
	127 OCCUPANTS	IBC 2018 TABLE 1004.1.2
OCCUPANCY SEPARATIONS		
	N/A	
AUTOMATIC SPRINKLER SYSTEM		
	NOT REQUIRED	IBC 2018 SECTION 903.2
STANDPIPE		
	N/A	
PORTABLE FIRE EXTINGUISHERS		
	PROVIDED	IBC 2018 SECTION 906.2
FIRE ALARM & DETECTION SYSTEM		
	PROVIDED	
EGRESS WIDTH		
STAIRSWAYS	NOT APPLICABLE	
OTHERS EGRESS COMPONENTS - REQUIRED	(127 OCCUPANT *.2"/OCCUPANT) = 1"	IBC 2018 SECTION 1005.3.2
OTHER EGRESS COMPONENETS - PROVIDED	PROVIDED - FOUR (2) 36" DOORS	IBC 2018 SECTION 1005.3.2
NUMBER OF EXITS		
MINIMUM	MINIMUM - 2	IBC 2018 1006.2.2.1
REQUIRED FOR EGRESS WIDTH		
PROVIDED FOR EGRESS WIDTH	FOUR (2) 36" WIDE DOORS	
FIRE RESISTANCE REQUIREMENTS		
STRUCTURAL FRAME	NEW	IBC 2018 TABLE 601
BEARING WALLS EXTERIOR	NEW	IBC 2018 TABLE 601
BEARING WALLS INTERIOR	N/A	IBC 2018 TABLE 601
NON-BEARING WALL INTERIOR	N/A	IBC 2018 TABLE 601
FLOOR CONSTRUCTION	NEW	IBC 2018 TABLE 601
ROOF CONSTRUCTION	NEW	IBC 2018 TABLE 601
SIDEYARD SEPARATIONS		
ZONING DISTRICT	-	
FRONT	N/A	
SIDE	N/A	
REAR	N/A	
SPECIAL REQUIREMENTS		
	NEW ENTRANCE CANOPY ADDITION	

ABBREVIATIONS

@	AT	EXP	EXPANSION	OV	OVERHEAD
A/C	AIR CONDITIONING	EXT	EXTERIOR	PL	PLATE
ABV	ABOVE	FD	FLOOR DRAIN	PLAM	PLASTIC LAMINATE
ACOUS	ACOUSTIC(AL)	FEC	FIRE EXTINGUISHER CABINET	PLAS	PLASTER
AD	AREA DRAIN	FHC	FIRE HOSE CABINET	PLYWD	PLAYWOOD
AFF	ABOVE FINISH FLOOR	FIN	FINISH(ED)	PS	PROJECTION SCREEN
ALT	ALTERNATE	FL	FLOOR	PTD	PAINTED
ALUM	ALUMINUM	FM	FLOOR MAT	PTN	PARTITION
ANOD	ANODIZED	FR	FRAME	R	RISER
AP	ACCESS PANEL	FTVM	FUTURE TV MONITOR	R/A	RETURN AIR
APPROX	APPROXIMATE	FURR	FURRED	RD	ROOF DRAIN
AVC	AUDIO VISUAL CONSOLE	FV	FIELD VERIFY	RE, REF	REFERENCE
BD	BOARD	GA	GAGE/GAUGE	REINF	REINFORCE(MENT)
BLDG	BUILDING	GALV	GALVANIZED	REQ'D	REQUIRED
BLKG	BLOCKING	GC	GENERAL CONTRACTOR	RM	ROOM
BM	BEAM	GL	GLASS	RTU	ROOFTOP UNIT
BRG	BEARING	GR	GROUND ROD ACCESS BOX	SCHED	SCHEDULE(D)
BRJ	BRICK RELIEF JOINT	GST	GALZED CERAMIC TILE	SF	SAND FINISH
BRZ	BRONZE	GWB	GYPSUM WALL BOARD	SHLVS	SHELVES
BYO	BY OWNER	GYP	GYPSUM	SHT	SHEET
CAB	CABINET	HC	HANDICAP	SIM	SIMILAR
CB	CATCH BASIN	HDW	HARDWARE	SK	SINK
CEM	CEMENT	HM	HOLLOW METAL	SM	SMOOTH
CER	CERAMIC	HORIZ	HORIZONTAL	SPEC	SPECIFICATIONS/SPECIFIED
CHBD	CHALKBOARD	HP	HIGH POINT	SQ	SQUARE
CJ	CONTROL JOINT	HT	HEIGHT	SS	SERVICE SINK
CL	CENTER LINE	ID	INSIDE DIMENSION	ST STL	STAINLESS STEEL
CLG	CEILING	INSUL	INSULATION	STD	STANDARD
CLO	CLOSET	INT	INTERIOR	STL	STEEL
CMU	CONCRET MASONRY UNIT	INV	INVERT	STOR	STORAGE
CO	CASED OPENING	JAN	JANITOR	STRUCT	STRUCTURE/STRUCTURAL
COL	COLUMN	JT	JOINT	SUSP	SUSPENDED
CONC	CONCRETE	LAM	LAMINATED	T	TREAD
CONT	CONTINUOUS	LAV	LAVATORY	TA	TOILET ACCESSORY
CONTR	CONCTRACT(OR)	LP	LOW POINT	TB	TACKBOARD
CPT	CARPET	MAX	MAXIMUM	TC	TOP OF CURB
CT	CARPET TILE	MB	MARKER BOARD	TEMP	TEMPERED
DET	DEATIL	MECH	MECHANICAL	THK	THICK
DF	DRYWALL FURRING	MFGR	MANUFACTURE(R)	TKBD	TACKBOARD
DIA	DIAMETER	MIN	MINIMUM	TRANS	TRANSPARENT
DIM	DIMENSION	MIR	MIRROR	TVM	TV MONITOR
DN	DOWN	MISC	MISCELANEOUS	TVP	TV PROJECTOR
DP	DRYWALL PARTITION	ML	MODULE LINE/METHAL LATH	TYP	TYPICAL
DR	DOOR	MO	MASONRY OPENING	U	URINAL
DS	DOWNSPOUT	MOD	MODULE/MODULAR	U.N.O.	UNLESS NOTED OTHERWISE
DWG	DRAWING	MONO	MONOLITHIC	UNFIN	UNFINISHED
EA	EACH	MP	MASONRY PARTITION	UV	UNDERFLOOR VENT
EAV	ELECTRICAL-AUDIO/VISUAL	MT	METAL THRESHOLD	VC	VALVE CABINET
EDF	ELECTRIC DRINKING FOUNTAIN	MTL	METAL	VERT	VERTICAL
EJ	EXPANSION JOINT	MWP	MEMBRANE WATERPROOFING	VIN	VINYL
EL	ELEVATION	NIC	NOT IN CONTRACT	VP	VISION PANEL
ELEC	ELECTRICAL	NTS	NOT TO SCALE	W/	WITH
ELEV	ELEVATOR OR ELEVATION	O/	ON TO OF, OVER	W/O	WITHOUT
EP	ELECTRICAL PANEL	OC	ON CENTER	WC	WATER CLOSET
EQ	EQUAL	OD	OUTSIDE DIAMETER	WD	WOOD
EQUIP	EQUIPMENT	OPNG	OPENING	WDW	WINDOW
EXIST	EXISTING	OPP	OPPOSITE	WOOJ	WORK OUT ON JOB
				WP	WATERPROOFING
				WWF	WELDED WIRE FABRIC

REFERENCING LEGEND

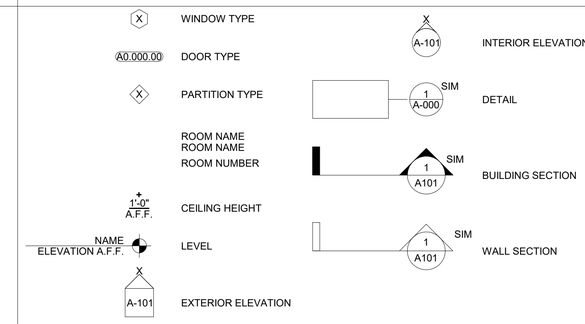

STATE MAP

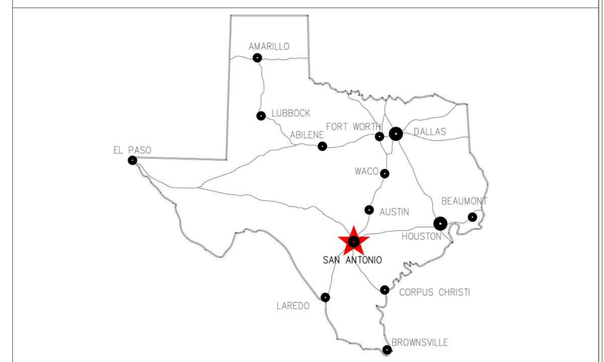

CITY MAP

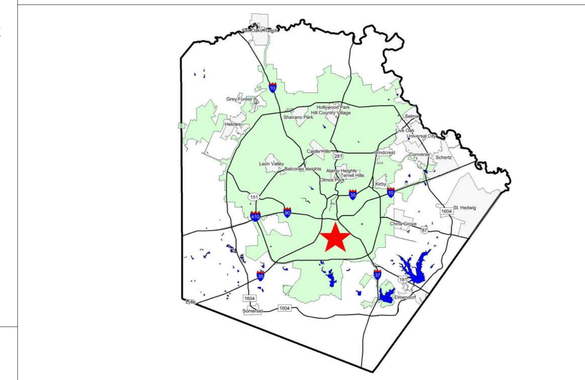

COORDINATION NOTES

IN THE EVENT A CONSTRUCTION DRAWING CONTAINS AN ITEM OR ITEMS REFERENCING ANOTHER DISCIPLINE'S DRAWINGS, SUCH AS "REFER TO STRUCTURAL" OR "SEE CIVIL", THE CONTRACTOR SHALL HAVE ALLOWED FOR THE PROVISION OF THAT ITEM WHETHER SHOWN OR INDICATED IN THE OTHER DISCIPLINE OR NOT.

THIS SHALL APPLY BOTH TO ARCHITECTURAL DRAWINGS REFERENCING OTHER DISCIPLINES (LANDSCAPE, CIVIL, STRUCTURAL, MECHANICAL, PLUMBING, ELECTRICAL, ETC.), AND DRAWINGS OF OTHER DISCIPLINES REFERENCING ARCHITECTURAL DRAWINGS.

IN THE EVENT THE ITEM REFERENCING OTHER DISCIPLINES IS DRAWN BUT NOT SPECIFICALLY NOTED THERE OR ELSEWHERE, THE CONTRACTOR SHALL MAKE PROVISIONS OF THE ITEM BASED ON THE DRAWN INFORMATION AND DIMENSION TO SCALE, BUT ONLY TO THE EXTENT OTHER SPECIFIC INFORMATION IS NOT PROVIDED.

ALL ACCOMMODATIONS IN ADJACENT AND ACCESSORY WORK SHALL BE MADE TO PROVIDE FOR A COMPLETE INSTALLATION OF THE ITEM.

IN CASE OF ANY DISCREPANCY WITH WORK OF OTHER DISCIPLINES, OR ONE DISCIPLINE TO ANOTHER, OR WITHIN THE WORK OF ANY DISCIPLINE, THE GREATER QUALITY OR QUANTITY OF WORK SHALL BE PROVIDED.

SCHEDULE OF ALTERNATES

REFER TO SPECS FOR A LIST OF ALTERNATES

MATERIAL LEGEND

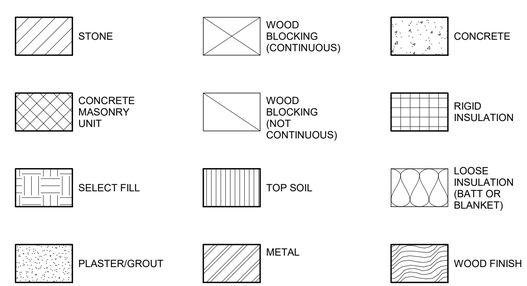

VICINITY MAP

#	DESCRIPTION	DATE

ISSUE/REVISIONS

GENERAL INFORMATION

WORLD HERITAGE CENTER
SAN ANTONIO, TEXAS

DUNAWAY
118 Broadway Suite-401, San Antonio, Texas 78205
Tel. 210.287.0348
(TX REG. F-1114)

muñoz
723 S. Flores • San Antonio, Texas 78204
210.349.1163 • www.munoz-co.com

INTERIM REVIEW DOCUMENTS

THE SCHEMATIC DESIGN DOCUMENTS DEPICTED THEREIN ARE INCOMPLETE AND MAY NOT BE USED FOR REGULATORY APPROVAL, PERMIT OR CONSTRUCTION.

GEOF EDWARDS
TEXAS REGISTRATION #18803

12.01.2021

JOB NO.	A19021.00
DESIGNED BY:	-
DRAWN BY:	-
CHECKED BY:	-
DATE:	12/01/21
SHEET:	G-001

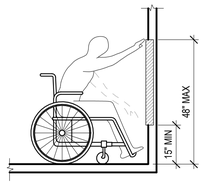

308.2.1 UNOBSTRUCTED FORWARD REACH

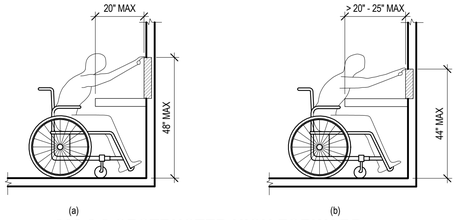

308.2.2 OBSTRUCTED HIGH FORWARD REACH

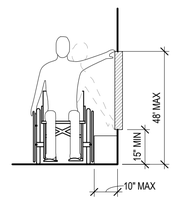

308.3.1 UNOBSTRUCTED SIDE REACH

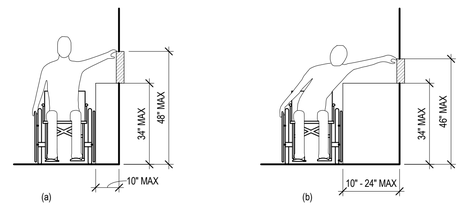

308.3.2 OBSTRUCTED HIGH SIDE REACH

REACH RANGES

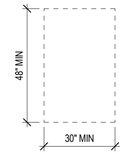

305.3 CLEAR FLOOR OR GROUND SPACE

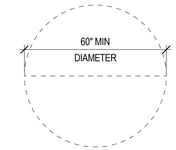

304.3.1 CIRCULAR TURNING SPACE

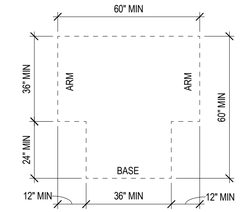

304.3.2 T-SHAPED TURNING SPACE

CLEAR FLOOR AND GROUND SPACE & TURNING SPACE

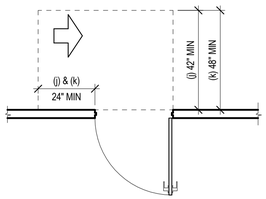

(j) LATCH APPROACH, PUSH SIDE
(k) LATCH APPROACH, PUSH SIDE, DOOR PROVIDED WITH CLOSER

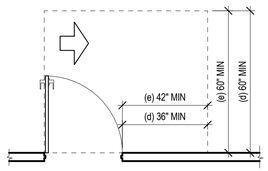

(d) HINGE APPROACH, PULL SIDE
(e) HINGE APPROACH, PULL SIDE

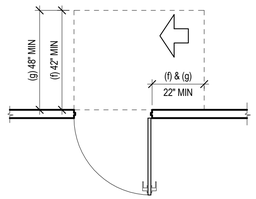

(f) HINGE APPROACH, PUSH SIDE
(g) HINGE APPROACH, PUSH SIDE, DOOR PROVIDED WITH BOTH CLOSER AND LATCH

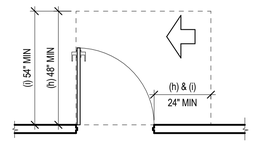

(h) LATCH APPROACH, PULL SIDE
(i) LATCH APPROACH, PULL SIDE, DOOR PROVIDED WITH CLOSER

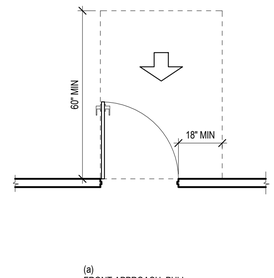

(a)
FRONT APPROACH, PULL SIDE

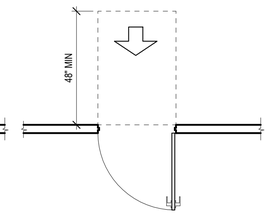

(b)
FRONT APPROACH, PUSH SIDE

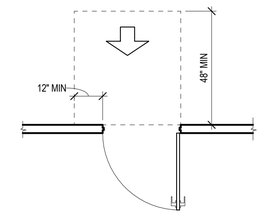

(c)
FRONT APPROACH, PUSH SIDE, DOOR PROVIDED WITH BOTH CLOSER AND LATCH

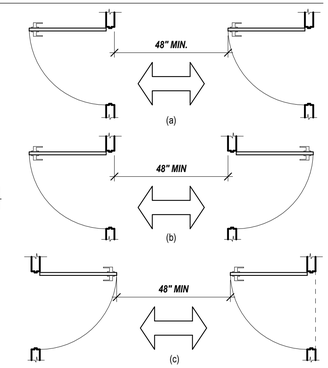

FIG. 404.2.6
DOORS IN SERIES AND GATES IN SERIES

DOORS, DOORWAYS, AND GATES

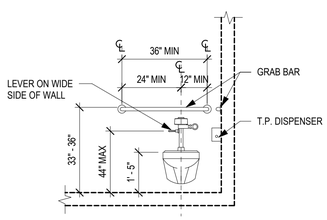

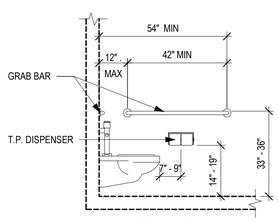

WATER CLOSETS

FLUSH VALVE CONTOLS SHALL BE HAND OPERATED OR AUTOMTIC, MOUNTED ON THE "WIDE" OR OPEN SIDE OF TOILET AREA AND NO MORE THAN 44" ABOVE THE FLOOR

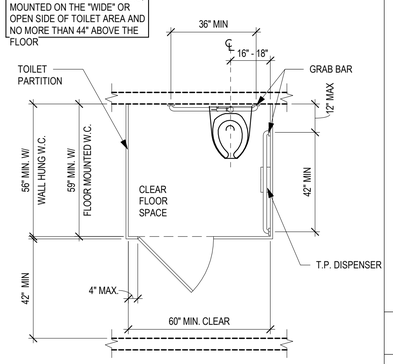

ACCESSIBLE TOILET STALL

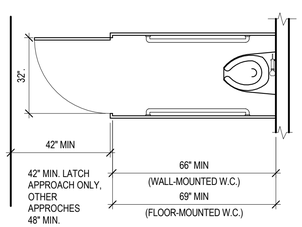

604 WATER CLOSET AND TOILET COMPARTMENTS

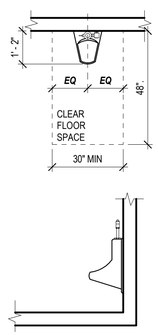

NOTE:
IF ALCOVE IS GREATER THAN 24" DEEP, THEN 36" MIN. WIDTH IS REQUIRED.

NOTE:
STALLS MAY EXCEED THESE DIMENSIONS, REFER TO FLOOR PLANS

605 URINALS

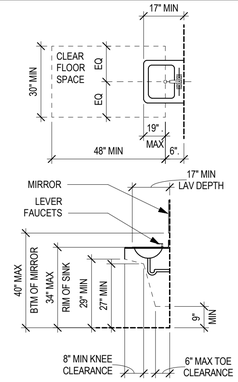

606 LAVATORIES AND SINKS

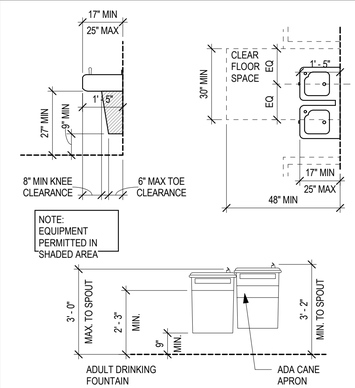

602 DRINKING FOUNTAINS

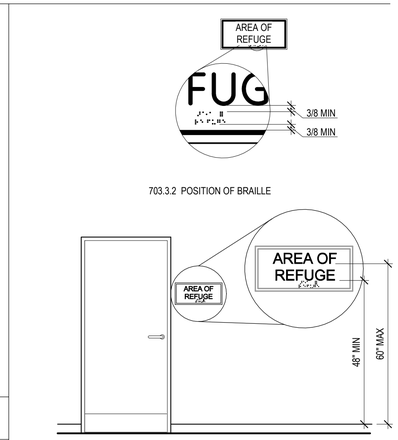

703.3.2 POSITION OF BRAILLE

FIG. 703.4.1 HEIGHT OF TACTILE CHARACTERS ABOVE FINISH FLOOR OR GROUND

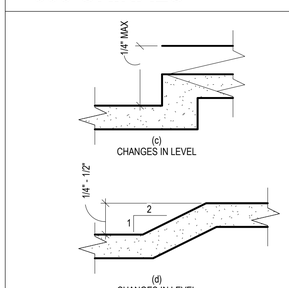

ACCESSIBLE ROUTE

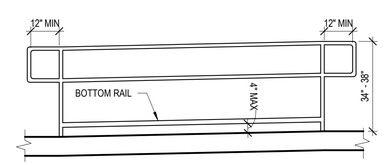

505.10.1 TOP AND BOTTOM HANDRAIL EXTENTION AT RAMP

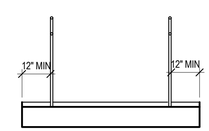

405.9.1 EXTENDED FLOOR OR GROUND SURFACE EDGE PROTECTION (IF NO BOTTOM RAIL IS PROVIDED)

HANDRAILS AND GRAB BARS

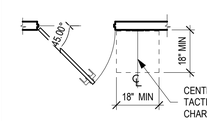

FIG. 703.4.2 LOCATION OF TACTILE SIGNS AT DOORS

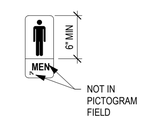

FIG. 703.6.1 PICTOGRAM FIELD

SIGNS

#	DESCRIPTION	DATE

ISSUE/REVISIONS

ACCESSIBILITY GUIDELINES

WORLD HERITAGE CENTER
SAN ANTONIO, TEXAS

DUNAWAY
118 Broadway Suite 631, San Antonio, Texas 78205
Tel: 210.287.5348
(TX REG. F-1144)

muñoz
723 S. Flores • San Antonio, Texas 78204
210.349.1163 • www.munoz-co.com

INTERIM REVIEW DOCUMENTS

THE SCHEMATIC DESIGN DOCUMENTS DEPICTED THEREIN ARE INCOMPLETE AND MAY NOT BE USED FOR REGULATORY APPROVAL, PERMIT OR CONSTRUCTION.

GEOF EDWARDS
TEXAS REGISTRATION #18803

12.01.2021

JOB NO.	A19021.00
DESIGNED BY:	-
DRAWN BY:	-
CHECKED BY:	-
DATE:	12/01/21
SHEET:	G-101

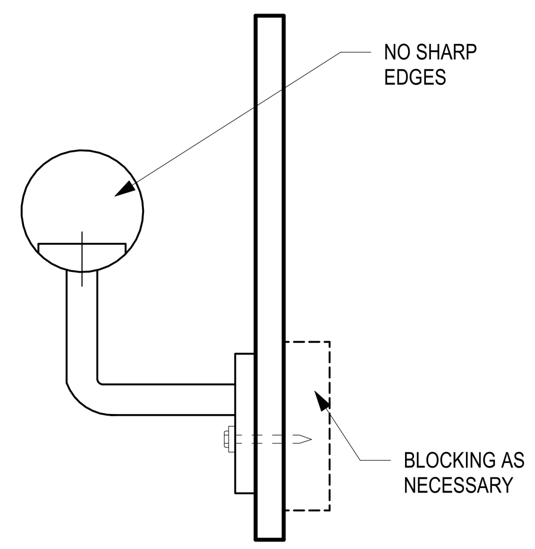

505.5 HANDRAILS CLEARANCE

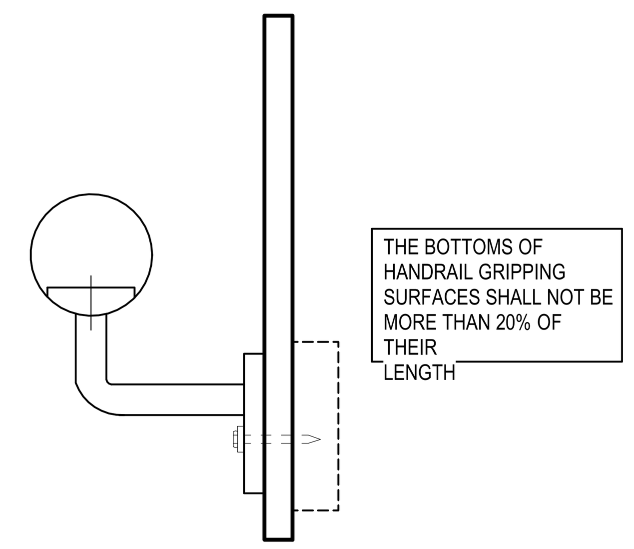

505.6 HORIZONTAL PROJECTIONS BELOW GRIPPING SURFACE

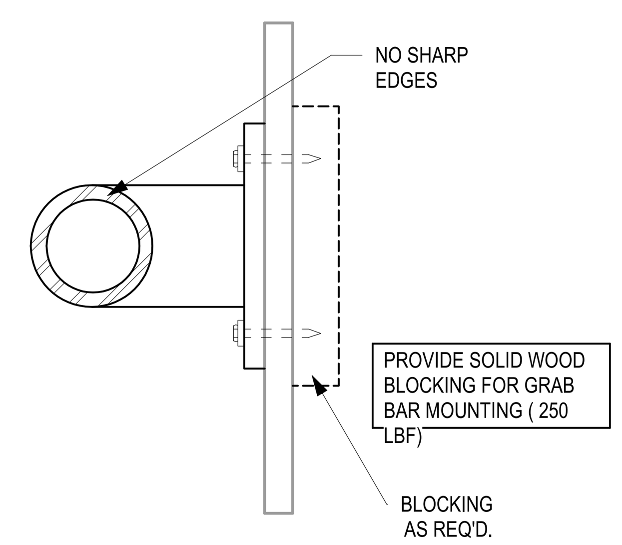

609.2.1 CIRCULAR CROSS SECTION 609.8 STRUCTURAL STRENGTH

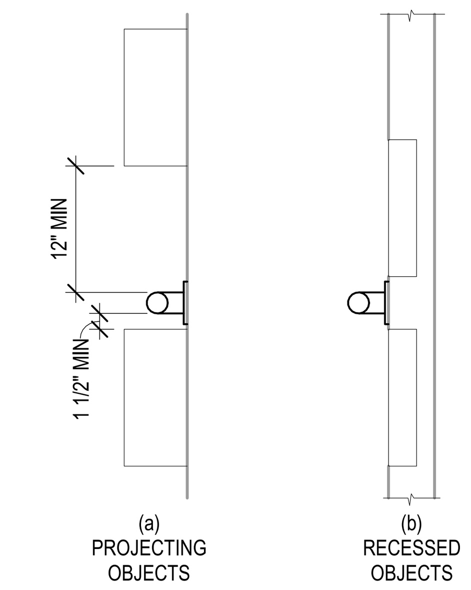

609.3 SPACING GRAB BARS

HANDRAILS AND GRAB BARS

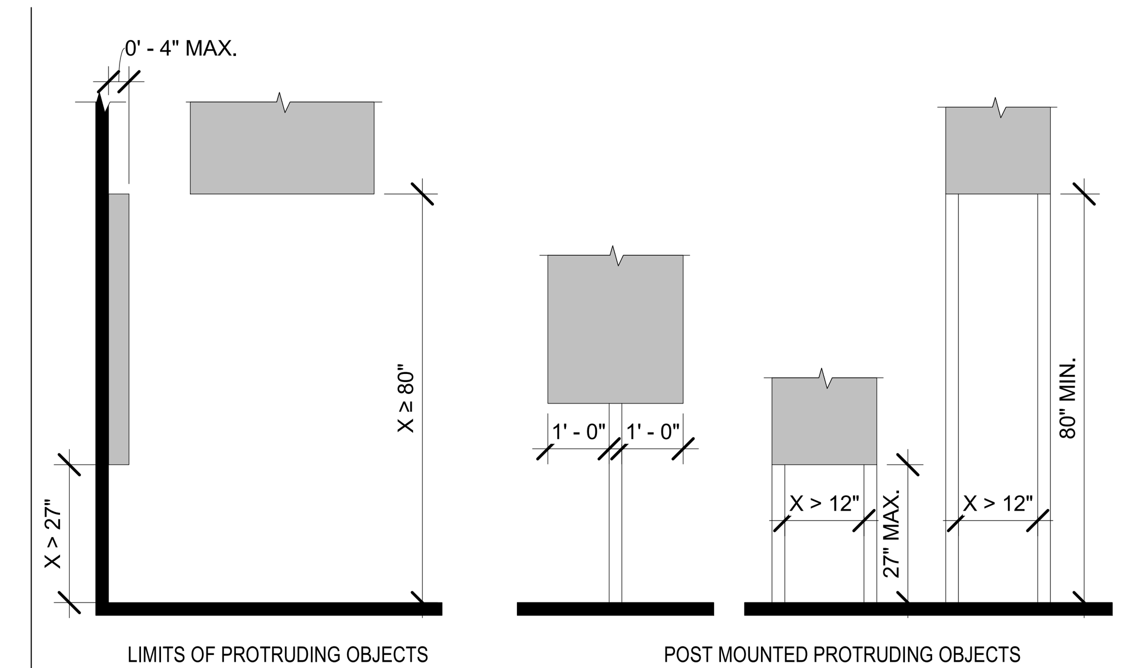

307.2 - OBJECTS WITH LEADING EDGES MORE THAN 27" AND NOT MORE THAN 80" ABOVE THE FINISH FLOOR OR GROUND SHALL PROTRUDE 4" MAXIMUM HORIZONTALLY INTO THE CIRCULATION PATH

307.3 - FREE STANDING OBJECTS MOUNTED ON POSTS OR PYLONS SHALL OVERHANG CIRCULATION PATHS 12" MAXIMUM WHEN LOCATED 27" MINIMUM AND 80" MAXIMUM ABOVE THE FINISH FLOOR OR GROUND. WHERE A SIGN OR OTHER OBSTRUCTION IS MOUNTED BETWEEN POSTS OR PYLONS AND THE CLEAR DISTANCE BETWEEN THE POSTS OR PYLONS IS GREATER THAN 12", THE LOWEST EDGE OF SUCH SIGN OR OBSTRUCTION SHALL BE 27" MAXIMUM OR 80" MINIMUM ABOVE THE FINISH FLOOR OR GROUND.

307 PROTRUDING OBJECTS

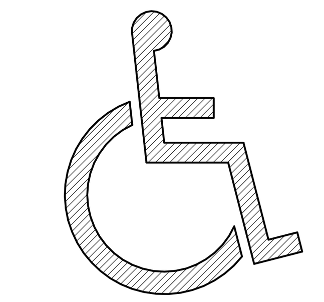

FIG. 703.7.2.1 INTERNATIONAL SYMBOL OF ACCESSIBILITY

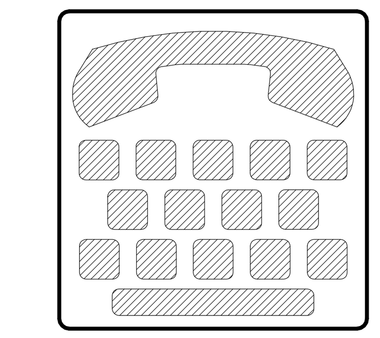

FIG. 703.7.2.2 INTERNATIONAL SYMBOL OF TTY

FIG. 703.7.2.3 VOLUME CONTROL TELEPHONE

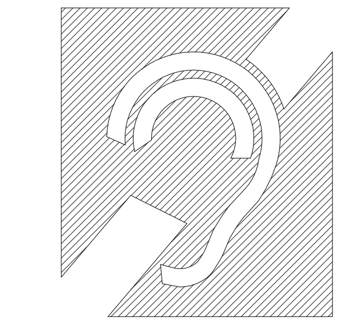

FIG. 703.7.2.4 INTERNATIONAL SYMBOL OF ACCESS FOR HEARING LOSS

SYMBOLS

CHAPTER 3: BUILDING BLOCKS

302 Floor or Ground Surfaces

302.2 Carpet. Carpet or carpet tile shall be securely attached and shall have a firm cushion, pad, or backing or no cushion or pad. Carpet or carpet tile shall have a level loop, textured loop, level cut pile, or level cut/uncut pile texture. Pile height shall be 1/2 inch (13 mm) maximum. Exposed edges of carpet shall be fastened to floor surfaces and shall have trim on the entire length of the exposed exposed edge. Carpet edge trim shall comply with 303.

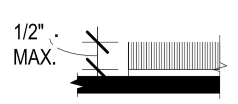

Figure 302.2 Carpet Pile Height

302.3 Openings. Openings in floor or ground surfaces shall not allow passage of a sphere more than 1/2 inch (13 mm) diameter except as allowed in 407.4.3, 409.4.3, 410.4, 810.5.3 and 810.10. Elongated openings shall be placed so that the long dimension is perpendicular to the dominant direction of travel.

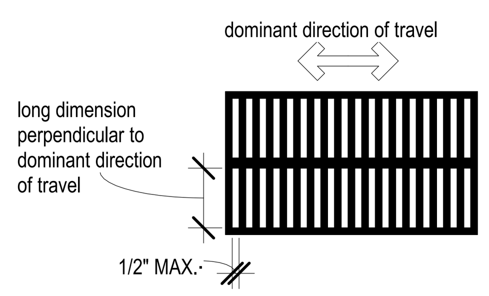

Figure 302.3 Elongated Openings in Floor or Ground Surface

303.2 Vertical. Changes in level of 1/4 inch (6.4 mm) high maximum shall be permitted to be vertical.

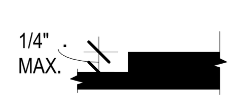

Figure 303.2 Vertical Change in Level

303.3 Beveled. Changes in level between 1/4 inch (6.4 mm) high minimum and 1/2 inch (13 mm) high maximum shall be beveled with a slope not steeper than 1:2.

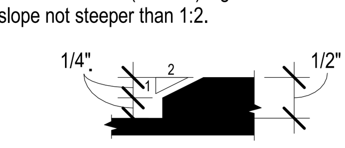

Figure 303.3 Beveled Change in Level

304 Turning Space 304.3.1 Circular Space. The turning space shall be a space of 60 inches (1525 mm) diameter minimum. The space shall be permitted to include knee and toe clearance complying with 306.

304.3.2 T-Shaped Space. The turning space shall be a T-shaped space within a 60 inch (1525 mm) square minimum with arms and base 36 inches (915 mm) wide minimum. Each arm of the T shall be clear of obstructions 12 inches (305 mm) minimum in each direction and the base shall be clear of obstructions 24 inches (610 mm) minimum. The space shall be permitted to include knee and toe clearance complying with 306 only at the end of either the base or one arm.

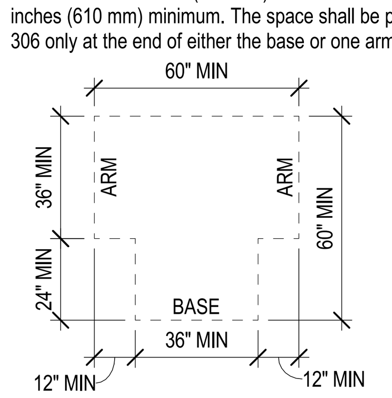

Figure 304.3.2 T-Shaped Turning Space

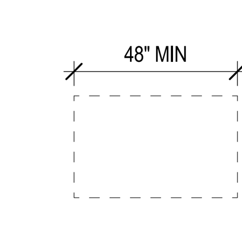

Figure 305.3 Clear Floor or Ground Space

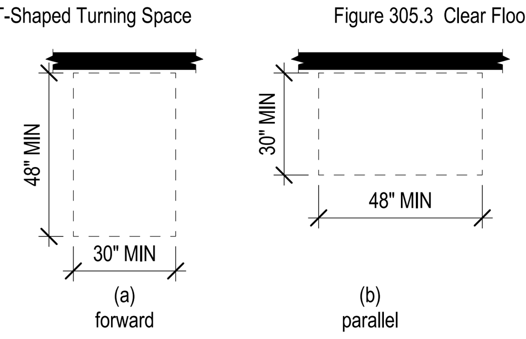

Figure 305.5 Position of Clear Floor or Ground Space

305.7.1 Forward Approach. Alcoves shall be 36 inches (915 mm)wide minimum where the depth exceeds 24 inches (610 mm).

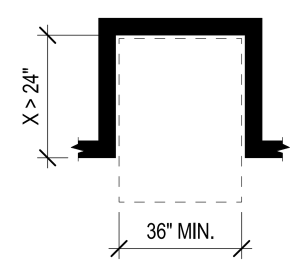

Figure 305.7.1 Maneuvering Clearnce in an Alcove, Forward Approach

305.7.2 Parallel Approach. Alcoves shall be 60 inches (1525 mm) wide minimum where the depth exceeds 15 inches (380 mm).

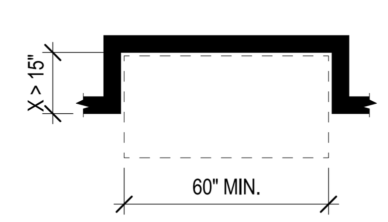

Figure 305.7.2 Maneuvering Clearnce in an Alcove, Parallel Approach

306 Knee and Toe Clearance

306.2 Toe Clearance.

306.2.1 General. Space under an element between the finish floor or ground and 9 inches (230 mm) above the finish floor or ground shall be considered toe clearance and shall comply with 306.2.

306.2.2 Maximum Depth. Toe clearance shall extend 25 inches (635 mm) maximum under an element.

306.2.3 Minimum Required Depth. Where toe clearance is required at an element as part of a clear floor space, the toe clearance shall extend 17 inches (430 mm) minimum under the element.

306.2.4 Additional Clearance. Space extending greater than 6 inches (150 mm) beyond the available knee clearance at 9 inches (230 mm) above the finish floor or ground shall not be considered toe clearance.

306.2.5 Width. Toe clearance shall be 30 inches (760 mm) wide minimum.

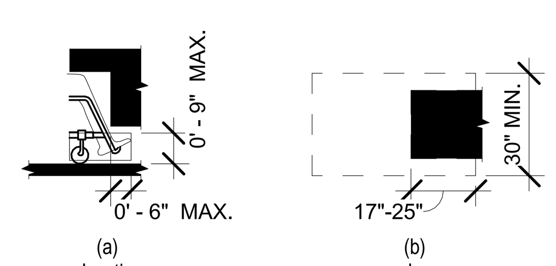

Figure 306.2 Toe Clearance

306.3 Knee Clearance.

306.3.1 General. Space under an element between 9 inches (230 mm) and 27 inches (685 mm) above the finish floor or ground shall be considered knee clearance and shall comply with 306.3.

306.3.2 Maximum Depth. Knee clearance shall extend 25 inches (635 mm) maximum under an element at 9 inches (230 mm) above the finish floor or ground.

306.3.3 Minimum Required Depth. Where knee clearance is required under an element as part of a clear floor space, the knee clearance shall be 11 inches (280 mm) deep minimum at 9 inches (230 mm) above the finish floor or ground, and 8 inches (205 mm) deep minimum at 27 inches (685 mm) above the finish floor or ground.

306.3.4 Clearance Reduction. Between 9 inches (230 mm) and 27 inches (685 mm) above the finish floor or ground, the knee clearance shall be permitted to reduce at a rate of 1 inch (25 mm) in depth for each 6 inches (150 mm) in height.

306.3.5 Width. Knee clearance shall be 30 inches (760 mm) wide minimum.

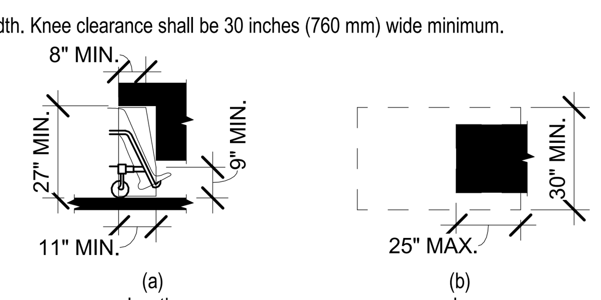

Figure 306.3 Knee Clearance

307 Protruding Objects

307.2 Protrusion Limits. Objects with leading edges more than 27 inches (685 mm) and not more than 80 inches (2030 mm) above the finish floor or ground shall protrude 4 inches (100 mm) maximum horizontally into the circulation path.

EXCEPTION: Handrails shall be permitted to protrude 4 1/2 inches (115 mm) maximum.

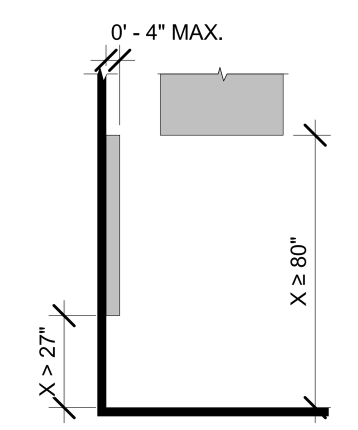

Figure 307.2 Limits of Protruding Objects

307.3 Post-Mounted Objects. Free-standing objects mounted on posts or pylons shall overhang circulation paths 12 inches (305 mm) maximum when located 27 inches (685 mm) minimum and 80 inches (2030 mm) maximum above the finish floor or ground. Where a sign or other obstruction is mounted between posts or pylons and the clear distance between the posts or pylons is greater than 12 inches (305 mm), the lowest edge of such sign or obstruction shall be 27 inches (685 mm) maximum or 80 inches (2030 mm) minimum above the finish floor or ground.

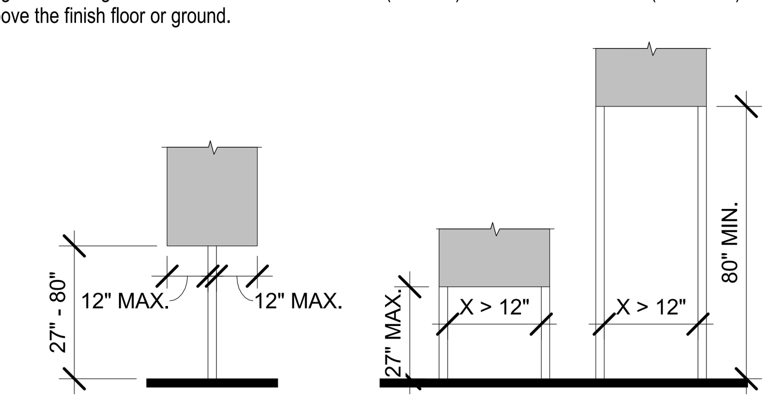

Figure 307.3 Post-Mounted Protruding Objects

307.4 Vertical Clearance. Vertical clearance shall be 80 inches (2030 mm) high minimum. Guardrails or other barriers shall be provided where the vertical clearance is less than 80 inches (2030 mm) high. The leading edge of such guardrail or barrier shall be located 27 inches (685 mm) maximum above the finish floor or ground.

EXCEPTION: Door closers and door stops shall be permitted to be 78 inches (1980 mm) minimum above the finish floor or ground.

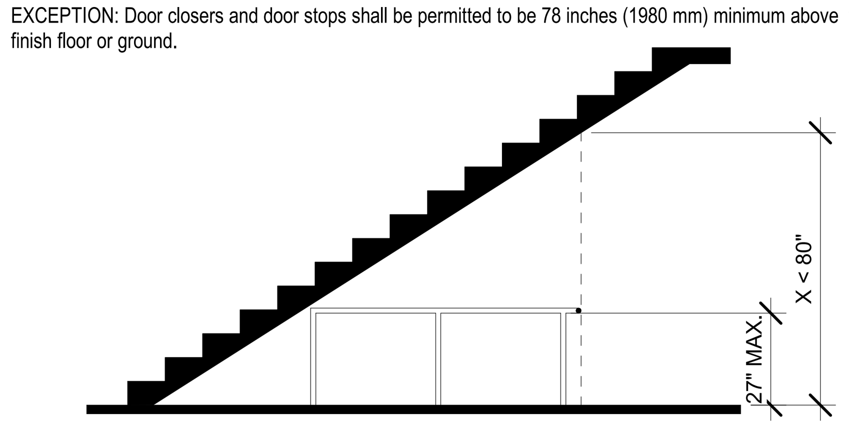

Figure 307.4 Vertical Clearance

308 Reach Ranges

Children's Reach Ranges

Forward or Side Reach	High (maximum)	Low (minimum)
Ages 3 and 4	36 in.	20 in.
Ages 5 through 8	40 in.	18 in.
Ages 9 through 12	44 in.	16 in.

308.2 Forward Reach.

308.2.1 Unobstructed. Where a forward reach is unobstructed, the high forward reach shall be 48 inches (1220 mm) maximum and the low forward reach shall be 15 inches (380 mm) minimum above the finish floor or ground.

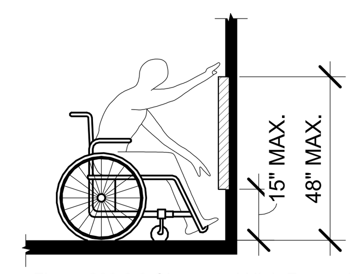

Figure 308.2.2 Obstructed High Forward Reach

308.2.2 Obstructed High Reach. Where a high forward reach is over an obstruction, the clear floor space shall extend beneath the element for a distance not less than the required reach depth over the obstruction. The high forward reach shall be 48 inches (1220 mm) maximum where the reach depth is 20 inches (510 mm) maximum. Where the reach depth exceeds 20 inches (510 mm), the high forward reach shall be 44 inches (1120 mm) maximum and the reach depth shall be 25 inches (635 mm) maximum.

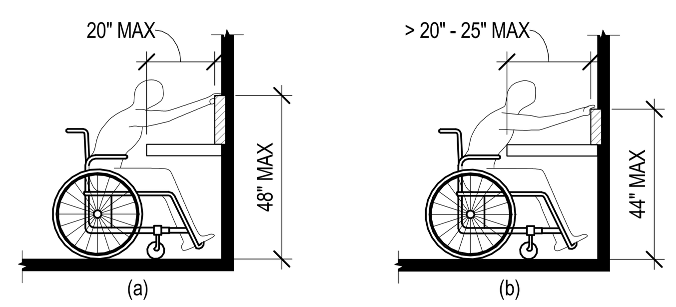

Figure 308.2.2 Obstructed High Forward Reach

308.3 Side Reach.

308.3.1 Unobstructed. Where a clear floor or ground space allows a parallel approach to an element and the side reach is unobstructed, the high side reach shall be 48 inches (1220 mm) maximum and the low side reach shall be 15 inches (380 mm) minimum above the finish floor or ground.

Exceptions:
1. An obstruction shall be permitted between theclar floor orground space and the element where the depth of the obstruction is 10" maximum.

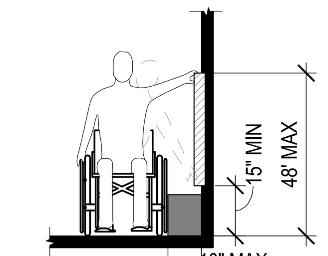

Figure 308.3.1 Unobstructed Side Reach

308.3.2 Obstructed High Reach. Where a clear floor or ground space allows a parallel approach to an element and the high side reach is over an obstruction, the height of the obstruction shall be 34 inches (865 mm) maximum and the depth of the obstruction shall be 24 inches (610 mm) maximum. The high side reach shall be 48 inches (1220 mm) maximum for a reach depth of 10 inches (255 mm) maximum. Where the reach depth exceeds 10 inches (255 mm), the high side reach shall be 46 inches (1170 mm) maximum for a reach depth of 24 inches (610 mm) maximum.

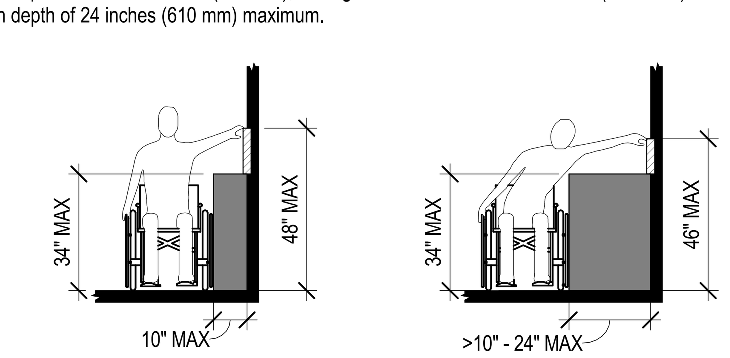

Figure 308.3.2 Obstructed High Side Reach

309 Operable Parts

309.2 Clear Floor Space. A clear floor or ground space complying with 305 shall be provided.

309.3 Height. Operable parts shall be placed within one or more of the reach ranges specified in 308.

309.4 Operation. Operable parts shall be operable with one hand and shall not require tight grasping, pinching, or twisting of the wrist. The force required to activate operable parts shall be 5 pounds (22.2 N) maximum.

CHAPTER 4: ACCESSIBLE ROUTES

402.2 Components. Accessible routes shall consist of one or more of the following components: walking surfaces with a running slope not steeper than 1:20, doorways, ramps, curb ramps excluding the flared sides, elevators, and platform lifts. All components of an accessible route shall comply with the applicable requirements of Chapter 4.

Advisory 402.2 Components. Walking surfaces must have running slopes not steeper than 1:20, see 403.3. Other components of accessible routes, such as ramps (405) and curb ramps (406), are permitted to be more steeply sloped.

403 Walking Surfaces
403.1 General. Walking surfaces that are a part of an accessible route shall comply with 403.

403.2 Floor or Ground Surface. Floor or ground surfaces shall comply with 302.

403.3 Slope. The running slope of walking surfaces shall not be steeper than 1:20. The cross slope of walking surfaces shall not be steeper than 1:48.

403.4 Changes in Level. Changes in level shall comply with 303.

403.5 Clearances. Walking surfaces shall provide clearances complying with 403.5.

EXCEPTION: Within employee work areas, clearances on common use circulation paths shall be permitted to be decreased by work area equipment provided that the decrease is essential to the function of the work being performed.

403.5.1 Clear Width. Except as provided in 403.5.2 and 403.5.3, the clear width of walking surfaces shall be 36 inches (915 mm) minimum.

EXCEPTION: The clear width shall be permitted to be reduced to 32 inches (815 mm) minimum for a length of 24 inches (610 mm) maximum provided that reduced width segments are separated by segments that are 48 inches (1220 mm) long minimum and 36 inches (915 mm) wide minimum.

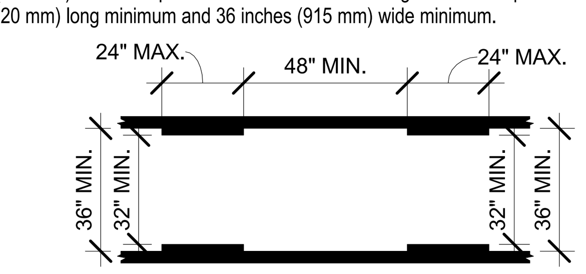

Figure 403.5.1 Clear Width of an Accessible Route

403.5.2 Clear Width at Turn. Where the accessible route makes a 180 degree turn around an element which is less than 48 inches (1220 mm) wide, clear width shall be 42 inches (1065 mm) minimum approaching the turn, 48 inches (1220 mm) minimum at the turn and 42 inches (1065 mm) minimum leaving the turn.

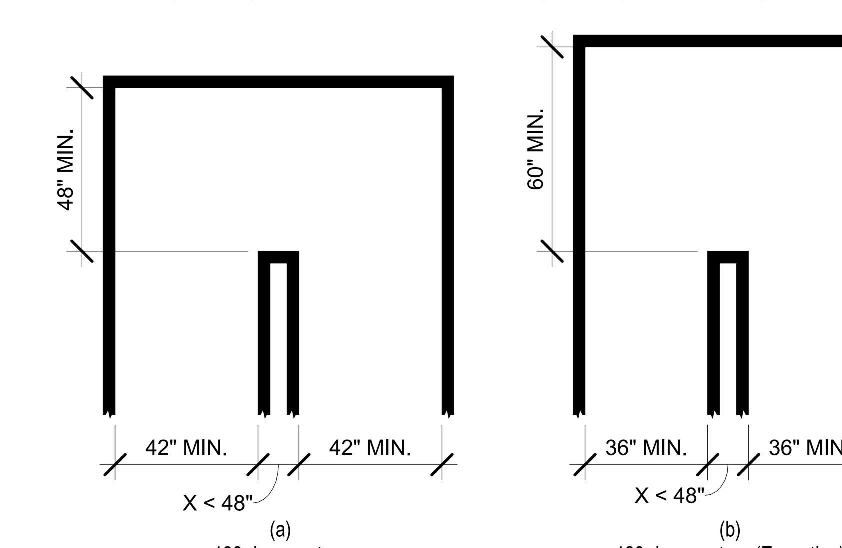

Figure 403.5.2 Clear Width at Turn

TAS ACCESSIBLE NOTES

1. REFER TO CIVIL AND LANDSCAPE DRAWINGS FOR ALL TAS REQUIREMENTS BEYOND THE EXTENT OF THE EXTERIOR BUILDING ENVELOPE

ISSUE/REVISIONS

#	DESCRIPTION	DATE

DUNAWAY
118 Broadway Suite 201 San Antonio, Texas 78205
Tel: 210.267.5246
(TX REG. F-1114)

muñoz
723 S. Flores • San Antonio, Texas 78204
210.349.1163 • www.munoz-co.com

ACCESSIBILTY GUIDELINES

WORLD HERITAGE CENTER
SAN ANTONIO, TEXAS

INTERIM REVIEW DOCUMENTS

THE SCHEMATIC DESIGN DOCUMENTS DEPICTED THEREIN ARE INCOMPLETE AND MAY NOT BE USED FOR REGULATORY APPROVAL, PERMIT OR CONSTRUCTION.

GEOF EDWARDS
TEXAS REGISTRATION #18803

12.01.2021

JOB NO.	**A19021.00**
DESIGNED BY:	-
DRAWN BY:	-
CHECKED BY:	-
DATE:	**12/01/21**
SHEET:	**G-102**

CHAPTER 4: ACCESSIBLE ROUTES

403.5.3 Passing Spaces. An accessible route with a clear width less than 60 inches (1525 mm) shall provide passing spaces at intervals of 200 feet (61 m) maximum.

404 Doors, Doorways, and Gates

404.2.3 Clear Width. Door openings shall provide a clear width of 32 inches (815 mm) minimum. Clear openings of doorways with swinging doors shall be measured between the face of the door and the stop, with the door open 90 degrees. Openings more than 24 inches (610 mm) deep shall provide a clear opening of 36 inches (915 mm) minimum. There shall be no projections into the required clear opening width lower than 34 inches (865 mm) above the finish floor or ground. Projections into the clear opening width between 34 inches (865 mm) and 80 inches (2030 mm) above the finish floor or ground shall not exceed 4 inches (100 mm).

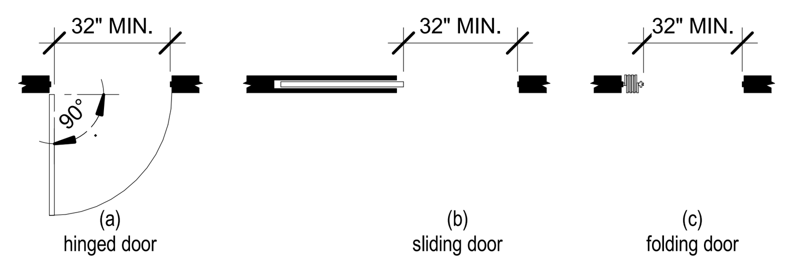

Figure 404.2.3 Clear Width of Doorways

404.2.4 Maneuvering Clearances. Minimum maneuvering clearances at doors and gates shall comply with 404.2.4. Maneuvering clearances shall extend the full width of the doorway and the required latch side or hinge side clearance.

404.2.4.3 Recessed Doors and Gates. Maneuvering clearances for forward approach shall be provided when any obstruction within 18 inches (455 mm) of the latch side of a doorway projects more than 8 inches (205 mm) beyond the face of the door, measured perpendicular to the face of the door or gate.

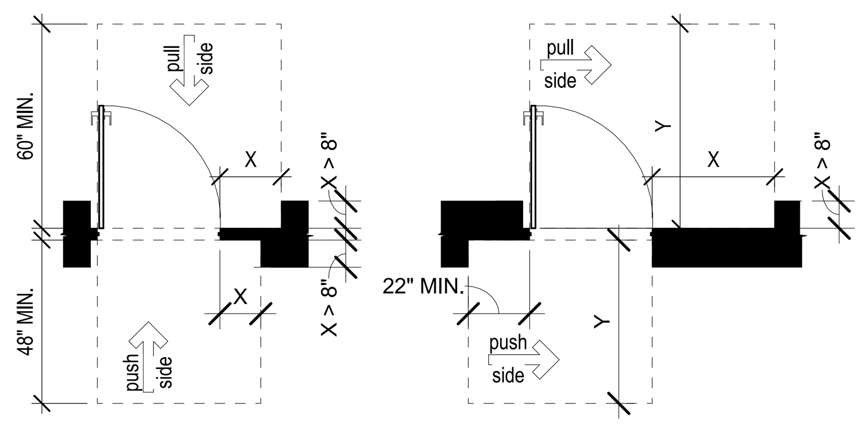

Front Approach - Swinging Doors

Pull Side Approaches
X = 18" MIN.

Push Side Approaches
X = 12" MIN. if door has both a closer and a latch

Side Approach - Swinging Doors Hinge Side

Pull Side Approaches
X = 36" MIN. if Y = 60" or
X = 42" MIN. if Y = 54"

Push Side Approaches
Y = 42" MIN.
If door has both a closer and a latch use 48"

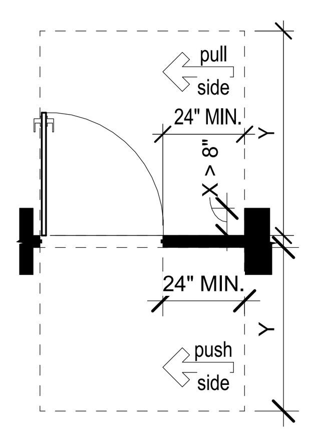

Side Approach - Swinging Doors Latch Side

Pull Side Approaches
Y = 48"
If door has a closer use 54"

Push Side Approaches
Y = 42" MIN.
If door has both a closer use 48"

404.2.6 Doors in Series and Gates in Series. The distance between two hinged or pivoted doors in series and gates in series shall be 48 inches (1220 mm) minimum plus the width of doors or gates swinging into the space.

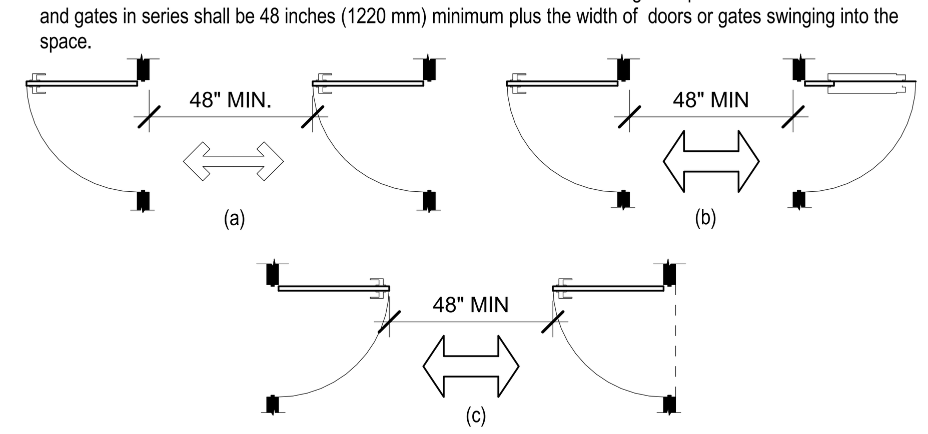

ALL FIGURES SHOWN ARE PROVIDED FOR INFORMATIONAL PURPOSES ONLY AND MAY OR MAY NOT BE APPLICABLE TO THIS PROJECT. THEY ARE INTENDED TO SERVE AS AN ABBREVIATED GUIDELINE FOR THE OWNER, BUILDER AND THEIR SUBCONTRACTOR'S USE. PLEASE VERIFY ALL CURRENT TEXAS ACCESSIBILITY STANDARDS WITH THE RESPECTIVE AGENCY AND REPORT ANY DISCREPANCIES TO THE ARCHITECT PRIOR TO THE COMMENCEMENT OF ANY WORK.

THESE FIGURES APPLY TO ALL PUBLIC BUILDINGS AND PUBLIC AREAS THRU-OUT THE PROJECT SITE WHICH ARE INTENDED TO BE USED AND/OR ARE ACCESSIBLE TO THE BUILDINGS EMPLOYEES, ITS STAFF AND/OR BY THE GENERAL PUBLIC.

404.2.7 Door and Gate Hardware. Handles, pulls, latches, locks, and other operable parts on doors and gates shall comply with 309.4. Operable parts of such hardware shall be 34 inches (865 mm) minimum and 48 inches (1220 mm) maximum above the finish floor or ground. Where sliding doors are in the fully open position, operating hardware shall be exposed and usable from both sides.

404.2.8.1 Door Closers and Gate Closers. Door closers and gate closers shall be adjusted so that from an open position of 90 degrees, the time required to move the door to a position of 12 degrees from the latch is 5 seconds minimum.

404.2.8.2 Spring Hinges. Door and gate spring hinges shall be adjusted so that from the open position of 70 degrees, the door or gate shall move to the closed position in 1.5 seconds minimum.

404.2.9 Door and Gate Opening Force. Fire doors shall have a minimum opening force allowable by the appropriate administrative authority. The force for pushing or pulling open a door or gate other than fire doors shall be as follows:

1. Interior hinged doors and gates: 5 pounds (22.2 N) maximum.

2. Sliding or folding doors: 5 pounds (22.2 N) maximum.

These forces do not apply to the force required to retract latch bolts or disengage other devices that hold the door or gate in a closed position.

404.2.10 Door and Gate Surfaces. Swinging door and gate surfaces within 10 inches (255 mm) of the finish floor or ground measured vertically shall have a smooth surface on the push side extending the full width of the door or gate. Parts creating horizontal or vertical joints in these surfaces shall be within 1/16 inch (1.6 mm) of the same plane as the other. Cavities created by added kick plates shall be capped.

404.2.11 Vision Lights. Doors, gates, and side lights adjacent to doors or gates, containing one or more glazing panels that permit viewing through the panels shall have the bottom of at least one glazed panel located 43 inches (1090 mm) maximum above the finish floor. 404.3 Automatic and Power-Assisted Doors and Gates. Automatic doors and automatic gates shall comply with

404.3. Full-powered automatic doors shall comply with ANSI/BHMA A156.10 (incorporated by reference, see "Referenced Standards" in Chapter 1). Low-energy and power-assisted doors shall comply with ANSI/BHMA A156.19 (1997 or 2002 edition) (incorporated by reference, see "Referenced Standards" in Chapter 1).

404.3.2 Maneuvering Clearance. Clearances at power-assisted doors and gates shall comply with 404.2.4. Clearances at automatic doors and gates without standby power and serving an accessible means of egress shall comply with 404.2.4.

404.3.7 Revolving Doors, Revolving Gates, and Turnstiles. Revolving doors, revolving gates, and turnstiles shall not be part of an accessible route.

405 Ramps
405.2 Slope. Ramp runs shall have a running slope not steeper than 1:12.

405.3 Cross Slope. Cross slope of ramp runs shall not be steeper than 1:48.

405.5 Clear Width. The clear width of a ramp run and, where handrails are provided, the clear width between handrails shall be 36 inches (915 mm) minimum.

405.6 Rise. The rise for any ramp run shall be 30 inches (760 mm) maximum.

405.7 Landings. Ramps shall have landings at the top and the bottom of each ramp run. Landings shall comply with 405.7.

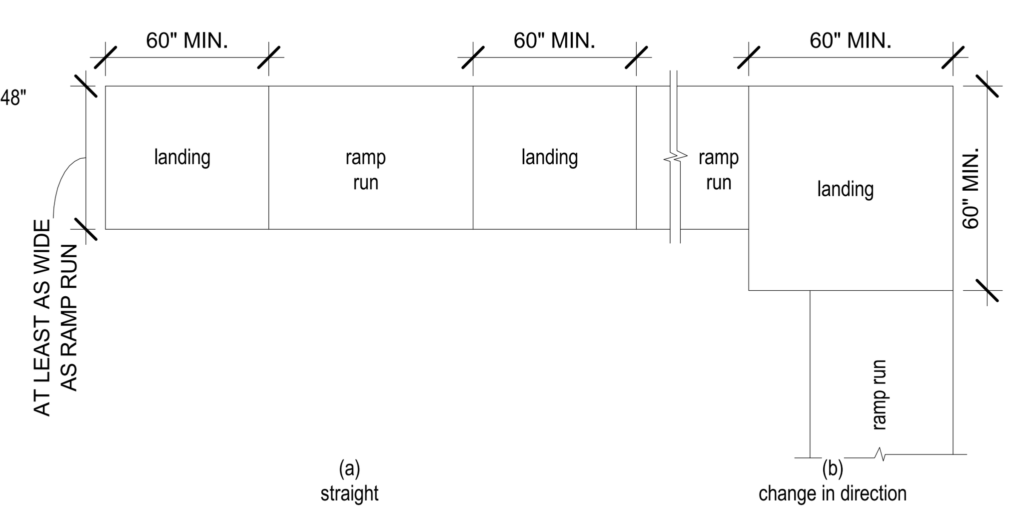

Figure 405.7 Ramp Landings

405.7.1 Slope. Landings shall have slope no steeper than 1:48. Changes in level are not permitted.

405.7.2 Width. The landing clear width shall be at least as wide as the widest ramp run leading to the landing.

405.7.3 Length. The landing clear length shall be 60 inches (1525 mm) long minimum.

405.7.4 Change in Direction. Ramps that change direction between runs at landings shall have a clear landing 60 inches (1525 mm) minimum by 60 inches (1525 mm) minimum.

405.7.5 Doorways. Where doorways are located adjacent to a ramp landing, maneuvering clearances required by 404.2.4 and 404.3.2 shall be permitted to overlap the required landing

405.8 Handrails. Ramp runs with a rise greater than 6 inches (150 mm) shall have handrails complying with 505.

405.9 Edge Protection. Edge protection complying with 405.9.1 or 405.9.2 shall be provided on each side of ramp runs and at each side of ramp landings.

405.9.1 Extended Floor or Ground Surface. The floor or ground surface of the ramp run or landing shall extend 12 inches (305 mm) minimum beyond the inside face of a handrail complying with 505.

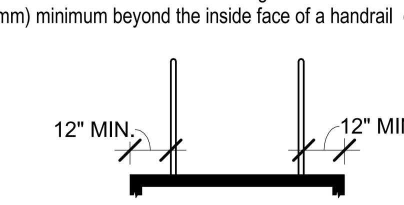

Figure 405.9.1 Extended Floor or Ground Surface Edge Protection

405.9.2 Curb or Barrier. A curb or barrier shall be provided that prevents the passage of a 4 inch (100 mm) diameter sphere, where any portion of the sphere is within 4 inches (100 mm) of the finish floor or ground surface.

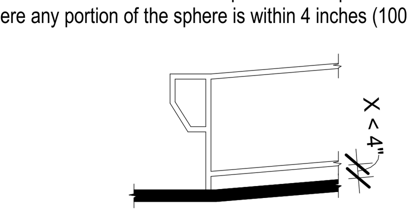

Figure 405.9.2 Curb or Barrier Edge Protection

406 Curb Ramps
406.1 General. Curb ramps on accessible routes shall comply with 406, 405.2 through 405.5, and 405.10.

406.2 Counter Slope. Counter slopes of adjoining gutters and road surfaces immediately adjacent to the curb ramp shall not be steeper than 1:20. The adjacent surfaces at transitions at curb ramps to walks, gutters, and streets shall be at the same level.

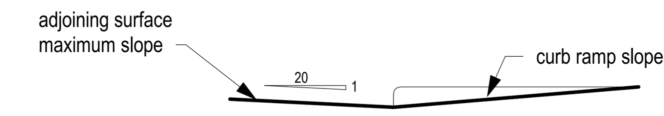

Figure 406.2 Counter Slope of Surfaces Adjacent to Curb Ramps

406.3 Sides of Curb Ramps. Where provided, curb ramp flares shall not be steeper than 1:10.

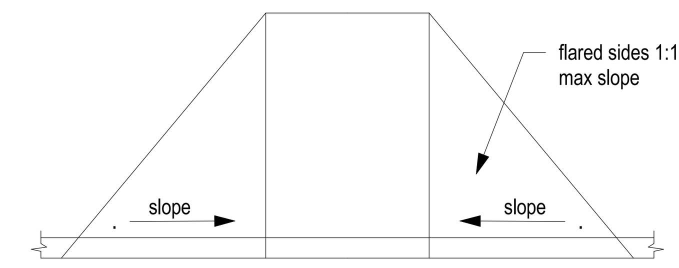

Figure 406.3 Sides of Curb Ramps

406.4 Landings. Landings shall be provided at the tops of curb ramps. The landing clear length shall be 36 inches (915 mm) minimum. The landing clear width shall be at least as wide as the curb ramp, excluding flared sides, leading to the landing.

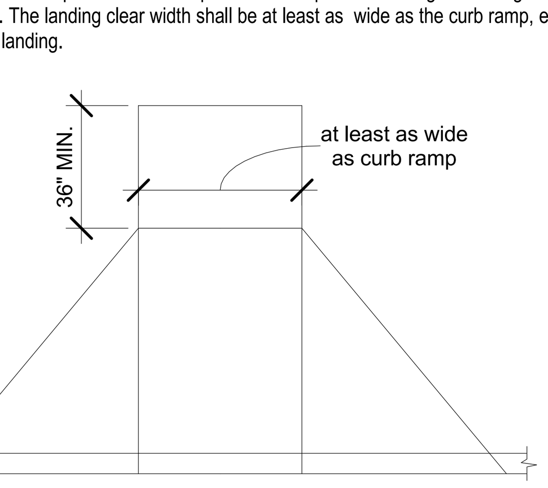

Figure 406.4 Landings at the Top of Curb Ramps

406.5 Location. Curb ramps and the flared sides of curb ramps shall be located so that they do not project into vehicular traffic lanes, parking spaces, or parking access aisles. Curb ramps at marked crossings shall be wholly contained within the markings, excluding any flared sides.

406.6 Diagonal Curb Ramps. Diagonal or corner type curb ramps with returned curbs or other well-defined edges shall have the edges parallel to the direction of pedestrian flow. The bottom of diagonal curb ramps shall have a clear space 48 inches (1220 mm) minimum outside active traffic lanes of the roadway. Diagonal curb ramps provided at marked crossings shall provide the 48 inches (1220 mm) minimum clear space within the markings. Diagonal curb ramps with flared sides shall have a segment of curb 24 inches (610 mm) long minimum located on each side of the curb ramp and within the marked crossing.

406.7 Islands. Raised islands in crossings shall be cut through level with the street or have curb ramps at both sides. Each curb ramp shall have a level area 48 inches (1220 mm) long minimum by 36 inches (915 mm) wide minimum at the top of the curb ramp in the part of the island intersected by the crossings. Each 48 inch (1220 mm) minimum by 36 inch (915 mm) minimum area shall be oriented so that the 48 inch (1220 mm) minimum length is in the direction of the running slope of the curb ramp it serves. The 48 inch (1220 mm) minimum by 36 inch (915 mm) minimum areas and the accessible route shall be permitted to overlap.

407 Elevators
407.1 General. Elevators shall comply with 407 and with ASME A17.1 (incorporated by reference, see "Referenced Standards" in Chapter 1). They shall be passenger elevators as classified by ASME A17.1. Elevator operation shall be automatic. EXCEPTION: Existing conditions don't have to comply

407.2.1.2 Size. Call buttons shall be 3/4 inch (19 mm) minimum in the smallest dimension.

407.2.2.1 Visible and Audible Signals. A visible and audible signal shall be provided at each hoistway entrance to indicate which car is answering a call and the car's direction of travel. Where in-car signals are provided, they shall be visible from the floor area adjacent to the hall call buttons.

407.2.2.2 Visible Signals. Visible signal fixtures shall be centered at 72 inches (1830 mm) minimum above the finish floor or ground. The visible signal elements shall be 2 1/2 inches (64 mm) minimum measured along the vertical centerline of the element. Signals shall be visible from the floor area adjacent to the hall call button.

407.2.3.1 Floor Designation. Floor designations complying with 703.2 and 703.4.1 shall be provided on both jambs of elevator hoistway entrances. Floor designations shall be provided in both tactile characters and braille. Tactile characters shall be 2 inches (51 mm) high minimum. A tactile star shall be provided on both jambs at the main entry level.

407.2.3.2 Car Designations. Destination-oriented elevators shall provide tactile car identification complying with 703.2 on both jambs of the hoistway immediately below the floor designation. Car designations shall be provided in both tactile characters and braille. Tactile characters shall be 2 inches (51 mm) high minimum.

407.3.3.1 Height. The device shall be activated by sensing an obstruction passing through the opening at 5 inches (125 mm) nominal and 29 inches (735 mm) nominal above the finish floor.

407.3.3.3 Duration. Door reopening devices shall remain effective for 20 seconds minimum.

407.3.4 Door and Signal Timing. The minimum acceptable time from notification that a car is answering a call or notification of the car assigned at the means for the entry of destination information until the doors of that car start to close shall be calculated from the following equation:

T = D/(1.5 ft/s) or T = D/(455 mm/s) = 5 seconds minimum where T equals the total time in seconds and D equals the distance (in feet or millimeters) from the point in the lobby or corridor 60 inches (1525 mm) directly in front of the farthest call button controlling that car to the centerline of its hoistway door.

407.3.5 Door Delay. Elevator doors shall remain fully open in response to a car call for 3 seconds

407.3.6 Width. The width of elevator doors shall comply with Table 407.4.1.

407.4 Elevator Car Requirements. Elevator cars shall comply with 407.4.

407.4.1 Car Dimensions. Inside dimensions of elevator cars and clear width of elevator doors shall comply with Table 407.4.1.

407.4.3 Platform to Hoistway Clearance. The clearance between the car platform sill and the edge of any hoistway landing shall be 1 1/4 inch (32 mm) maximum.

407.4.4 Leveling. Each car shall be equipped with a self-leveling feature that will automatically bring and maintain the car at floor landings within a tolerance of 1/2 inch (13 mm) under rated loading to zero loading conditions.

407.4.5 Illumination. The level of illumination at the car controls, platform, car threshold and car landing sill shall be 5 foot candles (54 lux) minimum.

407.4.6 Elevator Car Controls. Where provided, elevator car controls shall comply with 407.4.6 and 309.4.

407.4.6.1 Location. Controls shall be located within one of the reach ranges specified in 308.

407.4.6.2 Buttons. Car control buttons with floor designations shall comply with 407.4.6.2 and shall be raised or flush.

407.4.6.2.1 Size. Buttons shall be 3/4 inch (19 mm) minimum in their smallest dimension.

407.4.6.4.1 Height. Emergency control buttons shall have their centerlines 35 inches (890 mm) minimum above the finish floor.

407.4.7.1.1 Type. Control buttons shall be identified by tactile characters complying with 703.2.

407.4.7.1.3 Symbols. The control button for the emergency stop, alarm, door open, door close, main entry floor, and phone, shall be identified with tactile symbols as shown in Table 407.4.7.1.3.

407.4.8.1.1 Size. Characters shall be 1/2 inch (13 mm) high minimum.

407.4.8.2.2 Signal Level. The verbal annunciator shall be 10 dB minimum above ambient, but shall not exceed 80 dB, measured at the annunciator.

407.4.8.2.3 Frequency. The verbal annunciator shall have a frequency of 300 Hz minimum to 3000 Hz maximum.

CHAPTER 5: GENERAL SITE & BUILDING ELEMENTS

501 General
501.1 Scope. The provisions of Chapter 5 shall apply where required by Chapter 2 or where referenced by a requirement in this document.

502 Parking Spaces

502.1 General. Car and van parking spaces shall comply with 502. Where parking spaces are marked with lines, width measurements of parking spaces and access aisles shall be made from the centerline of the markings.

EXCEPTION: Where parking spaces or access aisles are not adjacent to another parking space or access aisle, measurements shall be permitted to include the full width of the line defining the parking space or access aisle.

502.2 Vehicle Spaces. Car parking spaces shall be 96 inches (2440 mm) wide minimum and van parking spaces shall be 132 inches (3350 mm) wide minimum, shall be marked to define the width, and shall have an adjacent access aisle complying with 502.3.

EXCEPTION: Van parking spaces shall be permitted to be 96 inches (2440 mm) wide minimum where the access aisle is 96 inches (2440 mm) wide minimum.

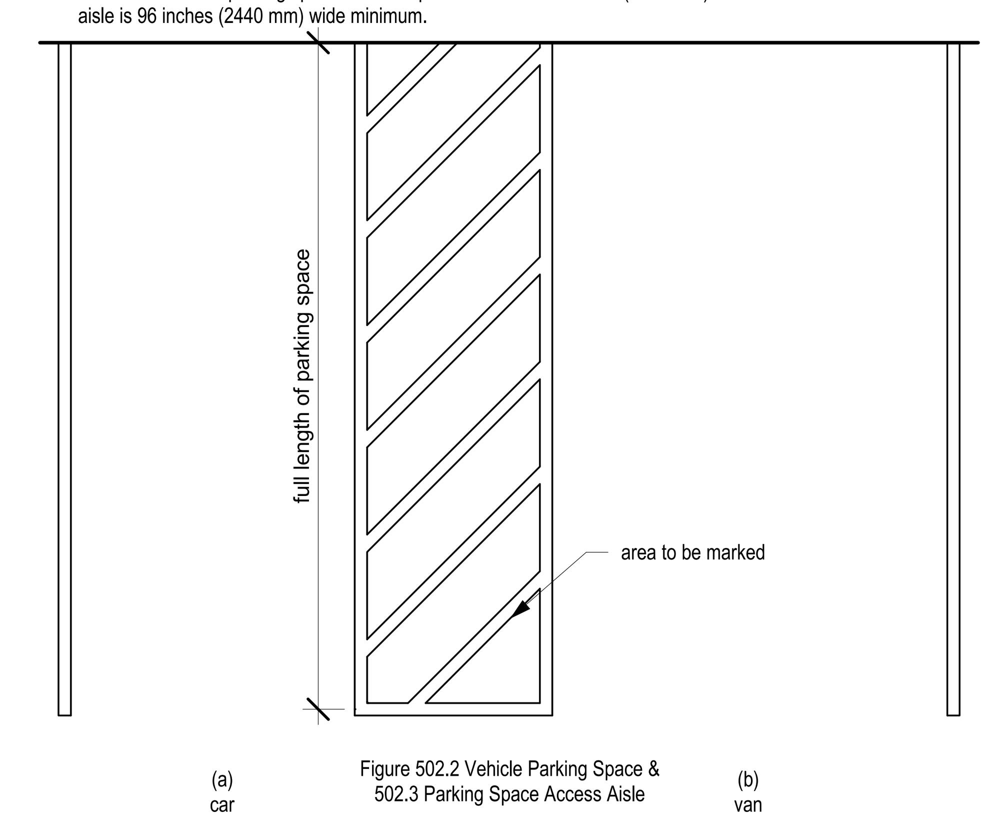

Figure 502.2 Vehicle Parking Space & 502.3 Parking Space Access Aisle

502.3 Access Aisle. Access aisles serving parking spaces shall comply with 502.3. Access aisles shall adjoin an accessible route. Two parking spaces shall be permitted to share a common access aisle.

502.3.1 Width. Access aisles serving car and van parking spaces shall be 60 inches (1525 mm) wide minimum.

502.3.2 Length. Access aisles shall extend the full length of the parking spaces they serve.

502.3.3 Marking. Access aisles shall be marked so as to discourage parking in them.

502.3.4 Location. Access aisles shall not overlap the vehicular way. Access aisles shall be permitted to be placed on either side of the parking space except for angled van parking spaces which shall have access aisles located on the passenger side of the parking spaces.

502.4 Floor or Ground Surfaces. Parking spaces and access aisles serving them shall comply with 302. Access aisles shall be at the same level as the parking spaces they serve. Changes in level are not permitted. EXCEPTION: Slopes not steeper than 1:48 shall be permitted.

502.5 Vertical Clearance. Parking spaces for vans and access aisles and vehicular routes serving them shall provide a vertical clearance of 98 inches (2490 mm) minimum.

502.6 Identification. Parking space identification signs shall include the International Symbol of Accessibility complying with 703.7.2.1. Signs identifying van parking spaces shall contain the designation "van accessible." Signs shall be 60 inches (1525 mm) minimum above the finish floor or ground surface measured to the bottom of the sign.

502.7 Relationship to Accessible Routes. Parking spaces and access aisles shall be designed so that cars and vans, when parked, cannot obstruct the required clear width of adjacent accessible routes.

503.3 Passenger Loading Zones

503.2 Vehicle Pull-Up Space. Passenger loading zones shall provide a vehicular pull-up space 96 inches (2440 mm) wide minimum and 20 feet (6100 mm) long minimum.

503.3 Access Aisle. Passenger loading zones shall provide access aisles complying with 503 adjacent to the vehicle pull-up space. Access aisles shall adjoin an accessible route and shall not overlap the vehicular way.

503.3.1 Width. Access aisles serving vehicle pull-up spaces shall be 60 inches (1525 mm) wide minimum.

503.3.2 Length. Access aisles shall extend the full length of the vehicle pull-up spaces they serve.

503.3.3 Marking. Access aisles shall be marked so as to discourage parking in them.

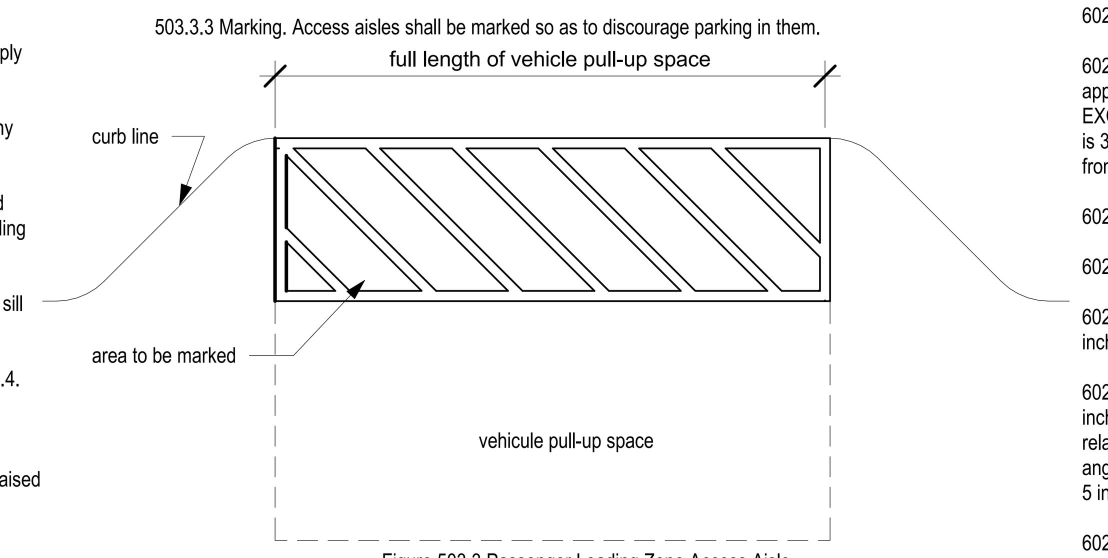

Figure 503.3 Passenger Loading Zone Access Aisle

503.4 Floor and Ground Surfaces. Vehicle pull-up spaces and access aisles serving them shall comply with 302. Access aisles shall be at the same level as the vehicle pull-up space they serve. Changes in level are not permitted. EXCEPTION: Slopes not steeper than 1:48 shall be permitted.

503.5 Vertical Clearance. Vehicle pull-up spaces, access aisles serving them, and a vehicular route from an entrance to the passenger loading zone, and from the passenger loading zone to a vehicular exit shall provide a vertical clearance of 114 inches (2895 mm) minimum.

504 Stairways
504.1 General. Stairs that are part of the means of egress is required to comply with 504

504.2 Treads and Risers. All steps on a flight of stairs shall have uniform riser heights and uniform tread depths. Risers shall be 4 inches (100 mm) high minimum and 7 inches (180 mm) high maximum. Treads shall be 11 inches (280 mm) deep minimum.

504.3 Open Risers. Open risers are not permitted.

504.4 Tread Surface. Stair treads shall comply with 302. Changes in level are not permitted.

504.5 Nosings. The radius of curvature at the leading edge of the tread shall be 1/2 inch (13 mm) maximum. Nosings that project beyond risers shall have the underside of the leading edge curved or beveled. Risers shall be permitted to slope under the tread at an angle of 30 degrees maximum from vertical. The permitted projection of the nosing shall extend 1 1/2 inches (38 mm) maximum over the tread below.

504.6 Handrails. Stairs shall have handrails complying with 505.

504.7 Wet Conditions. Stair treads and landings subject to wet conditions shall be designed to prevent the accumulation of water.

505 Handrails
505.1 General. Handrails provided along walking surfaces complying with 403, required at ramps complying with 405, and required at stairs complying with 504 shall comply with 505.

Advisory 505.1 General. Handrails are required on ramp runs with a rise greater than 6 inches (150 mm) (see 405.8) and on certain stairways (see 504). Handrails are not required on walking surfaces with running slopes less than 1:20. However, handrails are required to comply with 505 when they are provided on walking surfaces with running slopes less than 1:20 (see 403.6). Sections 505.2, 505.3, and 505.10 do not apply to handrails provided on walking surfaces with running slopes less than 1:20 as these sections only reference requirements for ramps and stairs.

505.2 Where Required. Handrails shall be provided on both sides of stairs and ramps.

505.3 Continuity. Handrails shall be continuous within the full length of each stair flight or ramp run. Inside handrails on switchback or dogleg stairs and ramps shall be continuous between flights or runs.

505.4 Height. Top of gripping surfaces of handrails shall be 34 inches (865 mm) minimum and 38 inches (965 mm) maximum vertically above walking surfaces, stair nosings, and ramp surfaces. Handrails shall be at a consistent height above walking surfaces, stair nosings, and ramp surfaces.

505.5 Clearance. Clearance between handrail gripping surfaces and adjacent surfaces shall be 1 1/2 inches (38 mm) minimum.

505.6 Gripping Surface. Handrail gripping surfaces shall be continuous along their length and shall not be obstructed along their tops or sides. The bottoms of handrail gripping surfaces shall not be obstructed for more than 20 percent of their length. Where provided, horizontal projections shall occur 1 1/2 inches (38 mm) minimum below the bottom of the handrail gripping surface.

505.7.1 Circular Cross Section. Handrail gripping surfaces with a circular cross section shall have an outside diameter of 1 1/4 inches (32 mm) minimum and 2 inches (51 mm) maximum.

505.7.2 Non-Circular Cross Sections. Handrail gripping surfaces with a non-circular cross section shall have a perimeter dimension of 4 inches (100 mm) minimum and 6 1/4 inches (160 mm) maximum, and a cross-section dimension of 2 1/4 inches (57 mm) maximum.

505.8 Surfaces. Handrail gripping surfaces and any surfaces adjacent to them shall be free of sharp or abrasive elements and shall have rounded edges.

505.9 Fittings. Handrails shall not rotate within their fittings.

505.10 Handrail Extensions. Handrail gripping surfaces shall extend beyond and in the same direction of stair flights and ramp runs in accordance with 505.10.

505.10.1 Top and Bottom Extension at Ramps. Ramp handrails shall extend horizontally above the landing for 12 inches (305 mm) minimum beyond the top and bottom of ramp runs. Extensions shall return to a wall, guard, or the landing surface, or shall be continuous to the handrail of an adjacent ramp run.

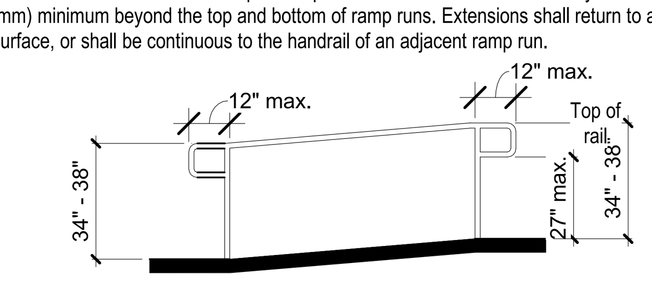

Figure 505.10.1 Top and Bottom handrail Extension at Ramps

505.10.2 Top Extension at Stairs. At the top of a stair flight, handrails shall extend horizontally above the landing for 12 inches (305 mm) minimum beginning directly above the first riser nosing. Extensions shall return to a wall, guard, or the landing surface, or shall be continuous to the handrail of an adjacent stair flight.

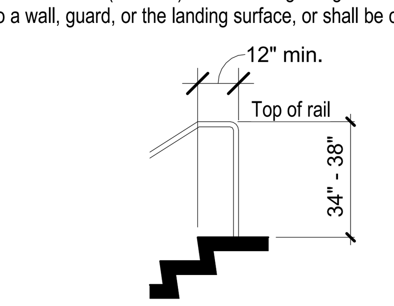

Figure 505.10.2 Top Handrail Extension at Stairs

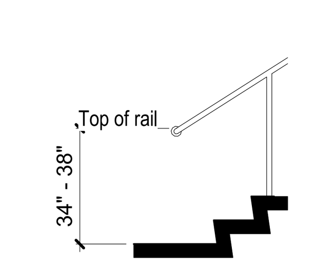

Figure 505.10.3 Bottom Handrail Extension at Stairs

505.10.3 Bottom Extension at Stairs. At the bottom of a stair flight, handrails shall extend at the slope of the stair flight for a horizontal distance at least equal to one tread depth beyond the last riser nosing. Extension shall return to a wall, guard, or the landing surface, or shall be continuous to the handrail of an adjacent stair flight.

CHAPTER 6: PLUMBING ELEMENTS AND FACILITIES

602 Drinking Fountains

602.2 Clear Floor Space. Units shall have a clear floor or ground space complying with 305 positioned for a forward approach and centered on the unit. Knee and toe clearance complying with 306 shall be provided.
EXCEPTION: A parallel approach complying with 305 shall be permitted at units for children's use where the spout is 30 inches (760 mm) maximum above the finish floor or ground and is 3 1/2 inches (90 mm) maximum from the front edge of the unit, including bumpers.

602.3 Operable Parts. Operable parts shall comply with 309.

602.4 Spout Height. Spout outlets shall be 36 inches (915 mm) maximum above the finish floor or ground.

602.5 Spout Location. The spout shall be located 15 inches (380 mm) minimum from the vertical support and 5 inches (125 mm) maximum from the front edge of the unit, including bumpers.

602.6 Water Flow. The spout shall provide a flow of water 4 inches (100 mm) high minimum and shall be located 5 inches (125 mm) maximum from the front of the unit. The angle of the water stream shall be measured horizontally relative to the front face of the unit. Where spouts are located less than 3 inches (75 mm) of the front of the unit, the angle of the water stream shall be 30 degrees maximum. Where spouts are located between 3 inches (75 mm) and 5 inches (125 mm) maximum from the front of the unit, the angle of the water stream shall be 15 degrees maximum.

602.7 Drinking Fountains for Standing Persons. Spout outlets of drinking fountains for standing persons shall be 38 inches (965 mm) minimum and 43 inches (1090 mm) maximum above the finish floor or ground.

ISSUE/REVISIONS

#	DESCRIPTION	DATE

ACCESSIBILITY GUIDELINES

DUNAWAY
118 Broadway Suite 201 San Antonio, Texas 78205
Tel: 210.267.5246
(TX REG. F-1114)

muñoz
723 S. Flores • San Antonio, Texas 78204
210.349.1163 • www.munoz-co.com

WORLD HERITAGE CENTER
SAN ANTONIO, TEXAS

INTERIM REVIEW DOCUMENTS

THE SCHEMATIC DESIGN DOCUMENTS DEPICTED THEREIN ARE INCOMPLETE AND MAY NOT BE USED FOR REGULATORY APPROVAL, PERMIT OR CONSTRUCTION.

GEOF EDWARDS
TEXAS REGISTRATION #18803

12.01.2021

JOB NO. A19021.00
DESIGNED BY: -
DRAWN BY: -
CHECKED BY: -
DATE: 12/01/21
SHEET: G-103

603 Toilet and Bathing Rooms
603.2 Clearances. Clearances shall comply with 603.2.

603.2.1 Turning Space. Turning space complying with 304 shall be provided within the room.

603.2.2 Overlap. Required clear floor spaces, clearance at fixtures, and turning space shall be permitted to overlap.

603.2.3 Door Swing. Doors shall not swing into the clear floor space or clearance required for any fixture. Doors shall be permitted to swing into the required turning space.

603.3 Mirrors. Mirrors located above lavatories or countertops shall be installed with the bottom edge of the reflecting surface 40 inches (1015 mm) maximum above the finish floor or ground. Mirrors not located above lavatories or countertops shall be installed with the bottom edge of the reflecting surface 35 inches (890 mm) maximum above the finish floor or ground.

603.4 Coat Hooks and Shelves. Coat hooks shall be located within one of the reach ranges specified in 308. Shelves shall be located 40 inches (1015 mm) minimum and 48 inches (1220 mm) maximum above the finish floor.

604 Water Closets and Toilet Compartments
604.2 Location. The water closet shall be positioned with a wall or partition to the rear and to one side. The centerline of the water closet shall be 16 inches (405 mm) minimum to 18 inches (455 mm) maximum from the side wall or partition, except that the water closet shall be 17 inches (430 mm) minimum and 19 inches (485 mm) maximum from the side wall or partition in the ambulatory accessible toilet compartment specified in 604.8.2. Water closets shall be arranged for a left-hand or right-hand approach.

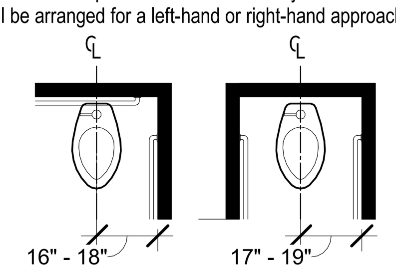

(a) wheelchair accessible water closets
(b) ambulatory accessible water closets

604.3.1 Size. Clearance around a water closet shall be 60 inches (1525 mm) minimum measured perpendicular from the side wall and 56 inches (1420 mm) minimum measured perpendicular from the rear wall.

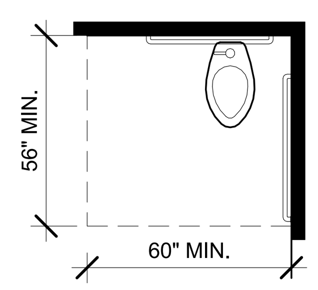

Figure 604.3.1 Size of Clearance at Water Closets

604.3.2 Overlap. The required clearance around the water closet shall be permitted to overlap the water closet, associated grab bars, dispensers, sanitary napkin disposal units, coat hooks, shelves, accessible routes, clear floor space and clearances required at other fixtures, and the turning space. No other fixtures or obstructions shall be located within the required water closet clearance.

604.4 Seats. The seat height of a water closet above the finish floor shall be 17 inches (430 mm) minimum and 19 inches (485 mm) maximum measured to the top of the seat. Seats shall not be sprung to return to a lifted position.

604.5 Grab Bars. Grab bars for water closets shall comply with 609. Grab bars shall be provided on the side wall closest to the water closet and on the rear wall.

604.5.1 Side Wall. The side wall grab bar shall be 42 inches (1065 mm) long minimum, located 12 inches (305 mm) maximum from the rear wall and extending 54 inches (1370 mm) minimum from the rear wall.

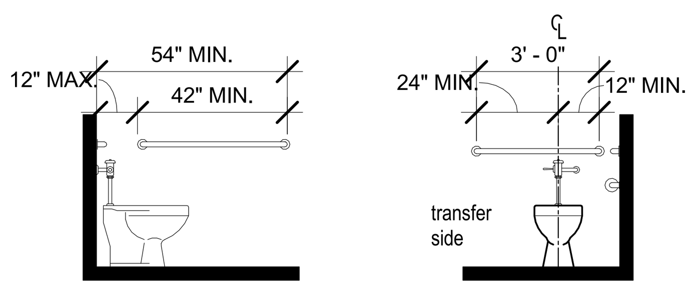

Figure 604.5.1
Side Wall Grab Bar at Water Closet

Figure 604.5.2
Rear Wall Grab Bar at Water Closet

604.5.2 Rear Wall. The rear wall grab bar shall be 36 inches (915 mm) long minimum and extend from the centerline of the water closet 12 inches (305 mm) minimum on one side and 24 inches (610 mm) minimum on the other side.

604.6 Flush Controls. Flush controls shall be hand operated or automatic. Hand operated flush controls shall comply with 309. Flush controls shall be located on the open side of the water closet except in ambulatory accessible compartments complying with 604.8.2.

604.7 Dispensers. Toilet paper dispensers shall comply with 309.4 and shall be 7 inches (180 mm) minimum and 9 inches (230 mm) maximum in front of the water closet measured to the centerline of the dispenser. The outlet of the dispenser shall be 15 inches (380 mm) minimum and 48 inches (1220 mm) maximum above the finish floor and shall not be located behind grab bars. Dispensers shall not be of a type that controls delivery or that does not allow continuous paper flow.

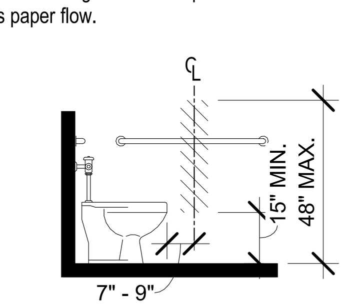

Figure 604.7 Dispenser Outlet Location

604.8 Toilet Compartments. Wheelchair accessible toilet compartments shall meet the requirements of 604.8.1 and 604.8.3. Compartments containing more than one plumbing fixture shall comply with 603. Ambulatory accessible compartments shall comply with 604.8.2 and 604.8.3.

604.8.1 Wheelchair Accessible Compartments. Wheelchair accessible compartments shall comply with 604.8.1.

604.8.1.1 Size. Wheelchair accessible compartments shall be 60 inches (1525 mm) wide minimum measured perpendicular to the side wall, and 56 inches (1420 mm) deep minimum for wall hung water closets and 59 inches (1500 mm) deep minimum for floor mounted water closets measured perpendicular to the rear wall. Wheelchair accessible compartments for children's use shall be 60 inches (1525 mm) wide minimum measured perpendicular to the side wall, and 59 inches (1500 mm) deep minimum for wall hung and floor mounted water closets measured perpendicular to the rear wall.

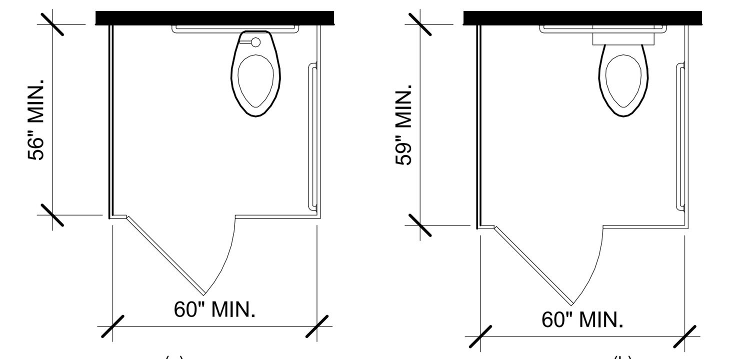

(a) adult wall hung water closet
(b) adult floor mounted water closet and children's water closet

Figure 604.8.1.1 Size of Wheelchair Accessible Toilet Compartment

604.8.1.2 Doors. Toilet compartment doors, including door hardware, shall comply with 404 except that if the approach is to the latch side of the compartment door, clearance between the door side of the compartment and any obstruction shall be 42 inches (1065 mm) minimum. Doors shall be located in the front partition or in the side wall or partition farthest from the water closet. Where located in the front partition, the door opening shall be 4 inches (100 mm) maximum from the side wall or partition farthest from the water closet. Where located in the side wall or partition, the door opening shall be 4 inches (100 mm) maximum from the front partition. The door shall be self-closing. A door pull complying with 404.2.7 shall be placed on both sides of the door near the latch. Toilet compartment doors shall not swing into the minimum required compartment area.

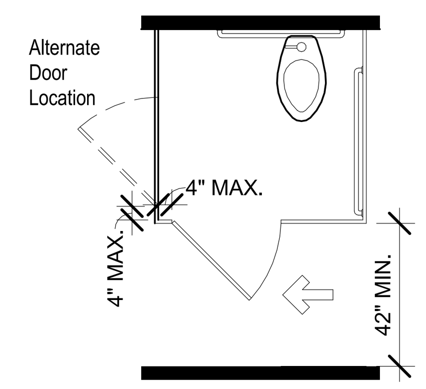

Figure 604.8.1.2 Wheelchair Accessible Toilet Compartment Doors

604.8.1.3 Approach. Compartments shall be arranged for left-hand or right-hand approach to the water closet.

604.8.1.4 Toe Clearance. The front partition and at least one side partition shall provide a toe clearance of 9 inches (230 mm) minimum above the finish floor and 6 inches (150 mm) deep minimum beyond the compartment-side face of the partition, exclusive of partition support members. Compartments for children's use shall provide a toe clearance of 12 inches (305 mm) minimum above the finish floor.

EXCEPTION: Toe clearance at the front partition is not required in a compartment greater than 62 inches (1575 mm) deep with a wall-hung water closet or 65 inches (1650 mm) deep with a floor-mounted water closet. Toe clearance at the side partition is not required in a compartment greater than 66 inches (1675 mm) wide. Toe clearance at the front partition is not required in a compartment for children's use that is greater than 65 inches (1650 mm)deep

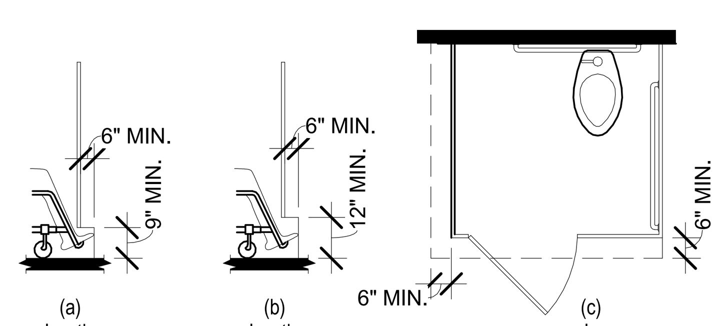

(a) elevation adult
(b) elevation children
(c) plan

Figure 604.8.1.4 Wheelchair Accessible Toilet Compartment Toe Clearance

604.8.1.5 Grab Bars. Grab bars shall comply with 609. A side-wall grab bar complying with 604.5.1 shall be provided and shall be located on the wall closest to the water closet. In addition, a rear-wall grab bar complying with 604.5.2 shall be provided.

604.8.2 Ambulatory Accessible Compartments. Ambulatory accessible compartments shall comply with 604.8.2.

604.8.2.1 Size. Ambulatory accessible compartments shall have a depth of 60 inches (1525 mm) minimum and a width of 35 inches (890 mm) minimum and 37 inches (940 mm) maximum.

604.8.2.2 Doors. Toilet compartment doors, including door hardware, shall comply with 404, except that if the approach is to the latch side of the compartment door, clearance between the door side of the compartment and any obstruction shall be 42 inches (1065 mm) minimum. The door shall be self-closing. A door pull complying with 404.2.7 shall be placed on both sides of the door near the latch. Toilet compartment doors shall not swing into the minimum required compartment area.

604.8.2.3 Grab Bars. Grab bars shall comply with 609. A side-wall grab bar complying with 604.5.1 shall be provided on both sides of the compartment.

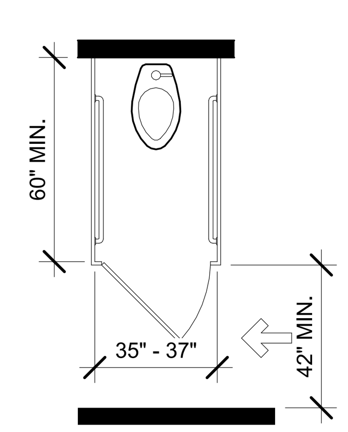

Figure 604.8.2 Ambulatory Accessible Toilet Compartment

604.8.3 Coat Hooks and Shelves. Coat hooks shall be located within one of the reach ranges specified in 308. Shelves shall be located 40 inches (1015 mm) minimum and 48 inches (1220 mm) maximum above the finish floor.

604.9 Water Closets and Toilet Compartments for Children's Use. Water closets and toilet compartments for children's use shall comply with 604.9.

604.9.1 Location. The water closet shall be located with a wall or partition to the rear and to one side. The centerline of the water closet shall be 12 inches (305 mm) minimum and 18 inches (455 mm) maximum from the side wall or partition, except that the water closet shall be 17 inches (430 mm) minimum and 19 inches (485 mm) maximum from the side wall or partition in the ambulatory accessible toilet compartment specified in 604.8.2. Compartments shall be arranged for left-hand or right-hand approach to the water closet.

604.9.2 Clearance. Clearance around a water closet shall comply with 604.3.

604.9.3 Height. The height of water closets shall be 11 inches (280 mm) minimum and 17 inches (430 mm) maximum measured to the top of the seat. Seats shall not be sprung to return to a lifted position.

604.9.4 Grab Bars. Grab bars for water closets shall comply with 604.5.

604.9.5 Flush Controls. Flush controls shall be hand operated or automatic. Hand operated flush controls shall comply with 309.2 and 309.4 and shall be installed 36 inches (915 mm) maximum above the finish floor. Flush controls shall be located on the open side of the water closet except in ambulatory accessible compartments complying with 604.8.2.

604.9.6 Dispensers. Toilet paper dispensers shall comply with 309.4 and shall be 7 inches (180 mm) minimum and 9 inches (230 mm) maximum in front of the water closet measured to the centerline of the dispenser. The outlet of the dispenser shall be 14 inches (355 mm) minimum and 19 inches (485 mm) maximum above the finish floor. There shall be a clearance of 1 1/2 inches (38 mm) minimum below the grab bar. Dispensers shall not be of a type that controls delivery or that does not allow continuous paper flow.
604.9.7 Toilet Compartments. Toilet compartments shall comply with 604.8.

605 Urinals
605.2 Height and Depth. Urinals shall be the stall-type or the wall-hung type with the rim 17 inches (430 mm) maximum above the finish floor or ground. Urinals shall be 13 1/2 inches (345 mm) deep minimum measured from the outer face of the urinal rim to the back of the fixture.

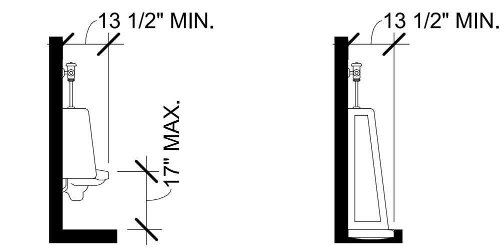

(a) wall hung type
(b) stall type

Figure 605.2 Height and Depth of Urinals

605.3 Clear Floor Space. A clear floor or ground space complying with 305 positioned for forward approach shall be provided.

605.4 Flush Controls. Flush controls shall be hand operated or automatic. Hand operated flush controls shall comply with 309.

606 Lavatories and Sinks
606.2 Clear Floor Space. A clear floor space complying with 305, positioned for a forward approach, and knee and toe clearance complying with 306 shall be provided.

606.3 Height. Lavatories and sinks shall be installed with the front of the higher of the rim or counter surface 34 inches (865 mm) maximum above the finish floor or ground.

606.4 Faucets. Controls for faucets shall comply with 309. Hand-operated metering faucets shall remain open for 10 seconds minimum.

606.5 Exposed Pipes and Surfaces. Water supply and drain pipes under lavatories and sinks shall be insulated or otherwise configured to protect against contact. There shall be no sharp or abrasive surfaces under lavatories and sinks.

608 Shower Compartments

608.2 Size and Clearances for Shower Compartments. Shower compartments shall have sizes and clearances complying with 608.2.

608.2.1 Transfer Type Shower Compartments. Transfer type shower compartments shall be 36 inches (915 mm) by 36 inches (915 mm) clear inside dimensions measured at the center points of opposing sides and shall have a 36 inch (915 mm) wide minimum entry on the face of the shower compartment. Clearance of 36 inches (915 mm) wide minimum by 48 inches (1220 mm) long minimum measured from the control wall shall be provided.

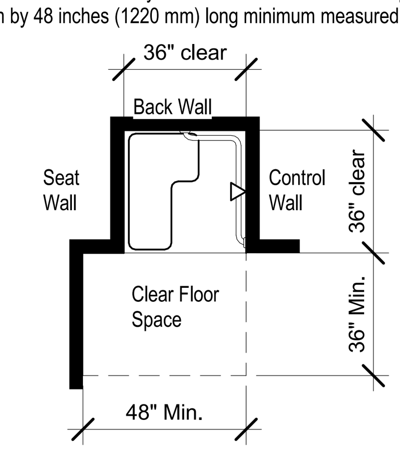

Note: inside finish dimensions measure at the center points of opposing sides

Figure 608.2.1 Transfer Type Shower Compartment Size and Clearance

608.2.2 Standard Roll-In Type Shower Compartments. Standard roll-in type shower compartments shall be 30 inches (760 mm) wide minimum by 60 inches (1525 mm) deep minimum clear inside dimensions measured at center points of opposing sides and shall have a 60 inches (1525 mm) wide minimum entry on the face of the shower compartment.

608.2.2.1 Clearance. A 30 inch (760 mm) wide minimum by 60 inch (1525 mm) long minimum clearance shall be provided adjacent to the open face of the shower compartment.

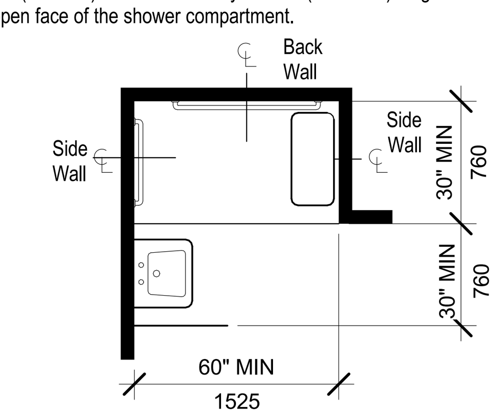

Note: inside finished dimentions measured at the center points of opposing sides

Figure 608.2.3 Alternate Roll-In Type Shower Compartment Size and Clearance

608.2.3 Alternate Roll-In Type Shower Compartments. Alternate roll-in type shower compartments shall be 36 inches (915 mm) wide and 60 inches (1525 mm) deep minimum clear inside dimensions measured at center points of opposing sides. A 36 inch (915 mm) wide minimum entry shall be provided at one end of the long side of the compartment.

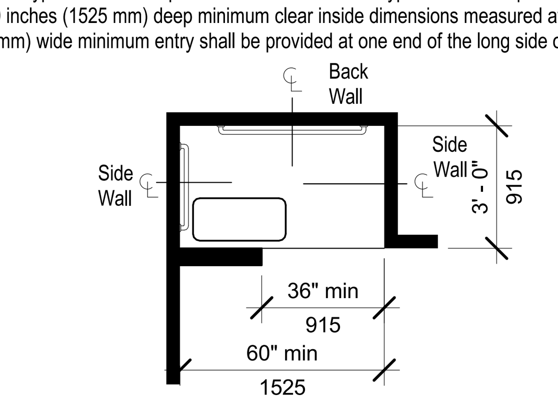

Note: inside finished dimentions measured at the center points of opposing sides
Figure 608.2.3 Alternate Roll-In Type Shower Compartment Size and Clearance

608.3 Grab Bars. Grab bars shall comply with 609 and shall be provided in accordance with 608.3. Where multiple grab bars are used, required horizontal grab bars shall be installed at the same height above the finish floor.

608.3.1 Transfer Type Shower Compartments. In transfer type compartments, grab bars shall be provided across the control wall and back wall to a point 18 inches (455 mm) from the control wall.

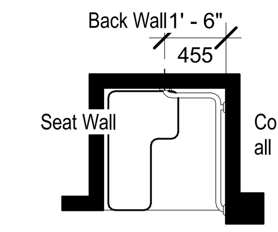

Figure 608.3.1 Grab Bars for Transfer Type Showers

608.3.2 Standard Roll-In Type Shower Compartments. Where a seat is provided in standard roll-in type shower compartments, grab bars shall be provided on the back wall and the side wall opposite the seat. Grab bars shall not be provided above the seat. Where a seat is not provided in standard roll-in type shower compartments, grab bars shall be provided on three walls. Grab bars shall be installed 6 inches (150 mm) maximum from adjacent walls.

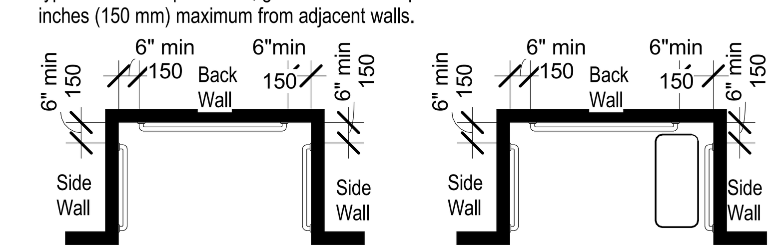

(a) without seat
(b) with seat

Figure 608.3.2 Grab Bars for Standard Roll-In Type Showers

608.3.3 Alternate Roll-In Type Shower Compartments. In alternate roll-in type shower compartments, grab bars shall be provided on the back wall and the side wall farthest from the compartment entry. Grab bars shall not be provided above the seat. Grab bars shall be installed 6 inches (150 mm) maximum from adjacent walls.

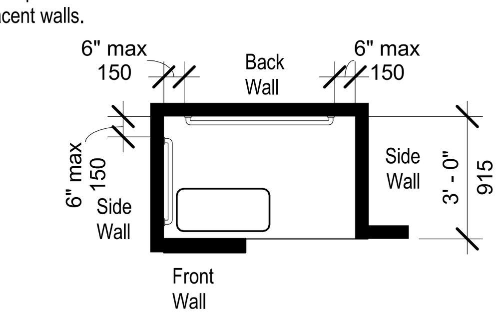

Figure 608.3.3 Grab Bars for Alternate Roll-In Type Showers

608.4 Seats. A folding or non-folding seat shall be provided in transfer type shower compartments. A folding seat shall be provided in roll-in type showers required in transient lodging guest rooms with mobility features complying with 806.2. Seats shall comply with 610. 608.5 Controls. Controls, faucets, and shower spray units shall comply with 309.4.

608.5.1 Transfer Type Shower Compartments. In transfer type shower compartments, the controls, faucets, and shower spray unit shall be installed on the side wall opposite the seat 38 inches (965 mm) minimum and 48 inches (1220 mm) maximum above the shower floor and shall be located on the control wall 15 inches (380 mm) maximum from the centerline of the seat toward the shower opening.

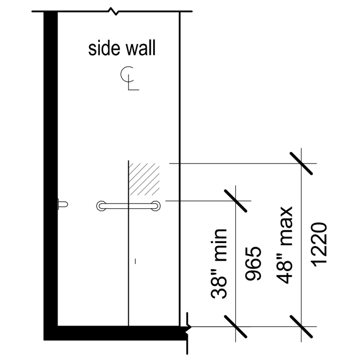

Figure 608.5.1 Transfer Type Shower Compartment Control Location

608.5.2 Standard Roll-In Type Shower Compartments. In standard roll-in type shower compartments, the controls, faucets, and shower spray unit shall be located above the grab bar, but no higher than 48 inches (1220 mm) above the shower floor. Where a seat is provided, the controls, faucets, and shower spray unit shall be installed on the back wall adjacent to the seat wall and shall be located 27 inches (685 mm) maximum from the seat wall.
608.5.2 Standard Roll-In Type Shower Compartments. In standard roll-in type shower compartments, the controls, faucets, and shower spray unit shall be located above the grab bar, but no higher than 48 inches (1220 mm) above the shower floor. Where a seat is provided, the controls, faucets, and shower spray unit shall be installed on the back wall adjacent to the seat wall and shall be located 27 inches (685 mm) maximum from the seat wall.

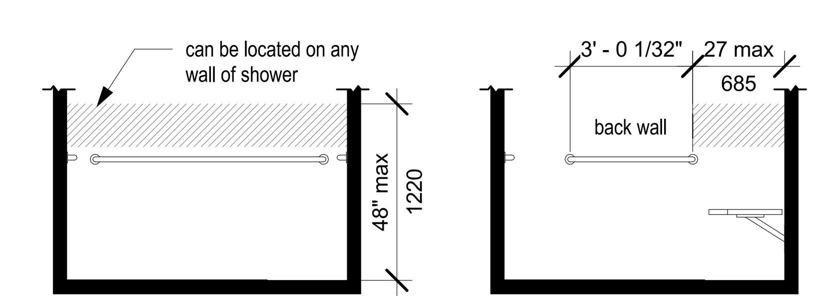

(a) without seat
(b) with seat

Figure 608.5.2 Standard Roll-In Type Shower Compartment Control Location

608.5.3 Alternate Roll-In Type Shower Compartments. In alternate roll-in type shower bar, but no higher than 48 inches (1220 mm) above the shower floor. Where a seat is provided, the controls, faucets, and shower spray unit shall be located on the side wall shower spray unit shall be installed on the side wall farthest from the compartment entry.

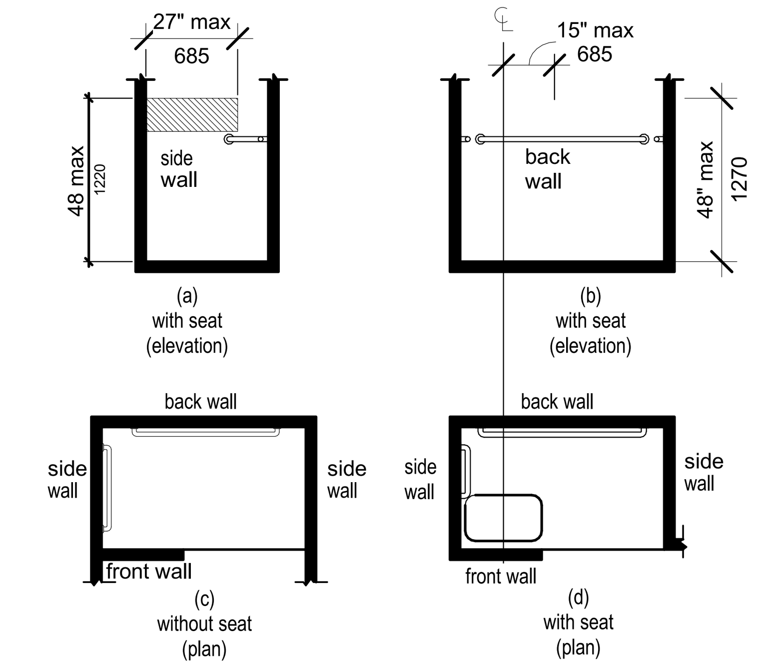

(a) with seat (elevation)
(b) with seat (elevation)
(c) without seat (plan)
(d) with seat (plan)

Figure 608.5.3 Alternate Roll-In Type Shower Compartment Control Location

608.6 Shower Spray Unit and Water. A shower spray unit with a hose 59 inches (1500 mm) long minimum that can be used both as a fixed-position shower head and as a hand-held shower shall be provided. The shower spray unit shall have an on/off control with a non-positive shut-off. If an adjustable-height shower head on a vertical bar is used, the bar shall be installed so as not to obstruct the use of grab bars. Shower spray units shall deliver water that is 120°F (49°C) maximum. 608.7 Thresholds. Thresholds in roll-in type shower compartments shall be 1/2 inch (13 mm) high maximum in accordance with 303. In transfer type shower compartments, thresholds 1/2 inch (13 mm) high maximum shall be beveled, rounded, or vertical.

608.8 Shower Enclosures. Enclosures for shower compartments shall not obstruct controls, faucets, and shower spray units or obstruct transfer from wheelchairs onto shower seats.

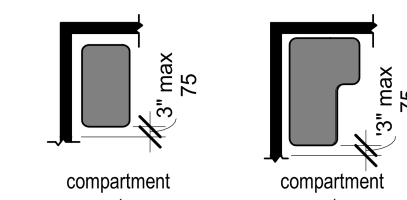

(a) rectangular
(b) L-shaped
Figure 610.3 Extent of Seat

610.3 Shower Compartment Seats. Where a seat is provided in a standard roll-in shower compartment, it shall be a folding type, shall be installed on the side wall adjacent to the controls, and shall extend from the back wall to a point within 3 inches (75 mm) of the compartment entry. Where a seat is provided in an alternate roll-in type shower compartment, it shall be a folding type, shall be installed on the front wall opposite the back wall, and shall extend from the adjacent side wall to a point within 3 inches (75 mm) of the compartment entry. In transfer-type showers, the seat shall extend from the back wall to a point within 3 inches (75 mm) of the compartment entry. The top of the seat shall be 17 inches (430 mm) minimum and 19 inches (485 mm) maximum above the bathroom finish floor. Seats shall comply with 610.3.1 or 610.3.2.

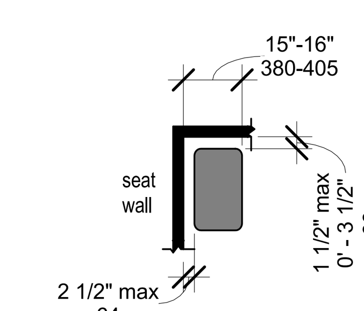

Figure 610.3.1 Rectangular Shower Seat

610.3.1 Rectangular Seats. The rear edge of a rectangular seat shall be 2 1/2 inches (64 mm) maximum and the front edge 15 inches (380 mm) minimum and 16 inches (405 mm) maximum from the seat wall. The side edge of the seat shall be 1 1/2 inches (38 mm) maximum from the adjacent wall.

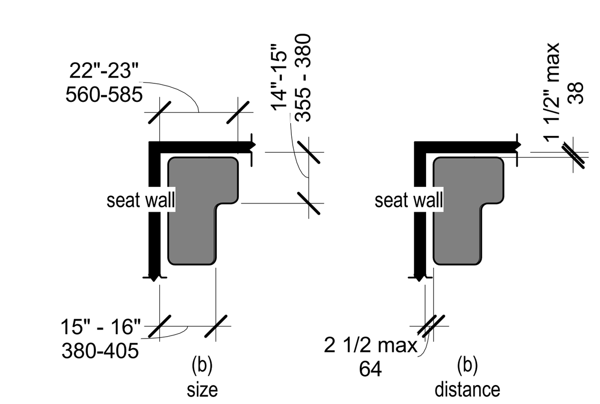

(b) size
(b) distance from wall

Figure 610.3.2 L-Shaped Shower Seat

610.3.2 L-Shaped Seats. The rear edge of an L-shaped seat shall be 2 1/2 inches (64 mm) maximum and the front edge 15 inches (380 mm) minimum and 16 inches (405 mm) maximum from the seat wall. The rear edge of the "L" portion of the seat shall be 1 1/2 inches (38 mm) maximum from the wall and the front edge shall be 14 inches (355 mm) minimum and 15 inches (380 mm) maximum from the wall. The end of the "L" shall be 22 inches (560 mm) minimum and 23 inches maximum (585 mm) from the main seat wall.

610.4 Structural Strength. Allowable stresses shall not be exceeded for materials used when a vertical or horizontal force of 250 pounds (1112 N) is applied at any point on the seat, fastener, mounting device, or supporting structure.

#	DESCRIPTION	DATE
ISSUE/REVISIONS		

ACCESSIBILTY GUIDELINES

DUNAWAY
118 Broadway Suite 201 San Antonio, Texas 78205
Tel: 210.267.5246
(TX REG. F-1114)

muñoz
723 S. Flores • San Antonio, Texas 78204
210.349.1163 • www.munoz-co.com

WORLD HERITAGE CENTER
SAN ANTONIO, TEXAS

INTERIM REVIEW DOCUMENTS

THE SCHEMATIC DESIGN DOCUMENTS DEPICTED THEREIN ARE INCOMPLETE AND MAY NOT BE USED FOR REGULATORY APPROVAL, PERMIT OR CONSTRUCTION.

GEOF EDWARDS
TEXAS REGISTRATION #18803

12.01.2021

JOB NO.	**A19021.00**
DESIGNED BY:	-
DRAWN BY:	-
CHECKED BY:	-
DATE:	**12/01/21**
SHEET:	**G-104**

CHAPTER 7: COMMUNICATION ELEMENTS AND FEATURES 702 Fire Alarm Systems 702.1 General. Fire alarm systems shall have permanently installed audible and visible alarms complying with NFPA 72 (1999 or 2002 edition) (incorporated by reference, see "Referenced Standards" in Chapter 1), except that the maximum allowable sound level of audible notification appliances complying with section 4-3.2.1 of NFPA 72 (1999 edition) shall have a sound level no more than 110 dB at the minimum hearing distance from the audible appliance. In addition, alarms in guest rooms required to provide communication features shall comply with sections 4-3 and 4-4 of NFPA 72 (1999 edition) or sections 7.4 and 7.5 of NFPA 72 (2002 edition).

703 Signs

703.1 General.

Signs shall comply with 703. Where both visual and tactile characters are required, either one sign with both visual and tactile characters, or two separate signs, one with visual, and one with tactile characters, shall be provided.

703.2 Raised Characters. Raised characters shall comply with 703.2 and shall be duplicated in braille complying with 703.3. Raised characters shall be installed in accordance with 703.4. 703.2.1 Depth. Raised characters shall be 1/32 inch (0.8 mm) minimum above their background.

703.2.2 Case. Characters shall be uppercase.

703.2.3 Style. Characters shall be sans serif. Characters shall not be italic, oblique, script, highly decorative, or of other unusual forms.

703.2.4 Character Proportions. Characters shall be selected from fonts where the width of the uppercase letter "O" is 55 percent minimum and 110 percent maximum of the height of the uppercase letter "I". 703.2.5 Character Height. Character height measured vertically from the baseline of the character shall be 5/8 inch (16 mm) minimum and 2 inches (51 mm) maximum based on the height of the uppercase letter

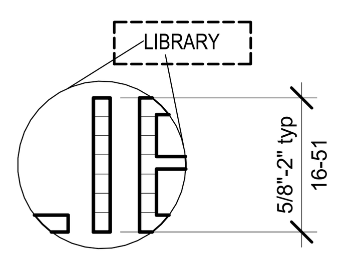

Figure 703.2.5 Height of Raised Characters

703.2.6 Stroke Thickness. Stroke thickness of the uppercase letter "I" shall be 15 percent maximum of the height of the character. 703.2.7 Character Spacing. Character spacing shall be measured between the two closest points of adjacent raised characters within a message, excluding word spaces. Where characters have rectangular cross sections, spacing between individual raised characters shall be 1/8 inch (3.2 mm) minimum and 4 times the raised character stroke width maximum. Where characters have other cross sections, spacing between individual raised characters shall be 1/16 inch (1.6 mm) minimum and 4 times the raised character stroke width maximum at the base of the cross sections, and 1/8 inch (3.2 mm) minimum and 4 times the raised character stroke width maximum at the top of the cross sections. Characters shall be separated from raised borders and decorative elements 3/8 inch (9.5 mm) minimum. 703.2.8 Line Spacing. Spacing between the baselines of separate lines of raised characters within a message shall be 135 percent minimum and 170 percent maximum of the raised character height. 703.3 Braille. Braille shall be contracted (Grade 2) and shall comply with 703.3 and 703.4. 703.3.1 Dimensions and Capitalization. Braille dots shall have a domed or rounded shape and shall comply with Table 703.3.1. The indication of an uppercase letter or letters shall only be used before the first word of sentences, proper nouns and names, individual letters of the alphabet, initials, and acronyms.

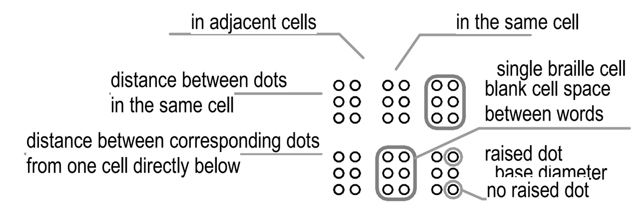

Figure 703.3.1 Braille Measurement

703.3.2 Position. Braille shall be positioned below the corresponding text. If text is multi-lined, braille shall be placed below the entire text. Braille shall be separated 3/8 inch (9.5 mm) minimum from any other tactile characters and 3/8 inch (9.5 mm) minimum from raised borders and decorative elements.

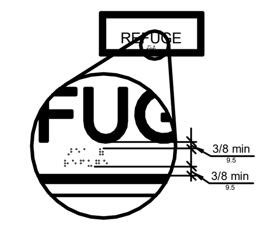

Figure 703.3.2 Position of Braille

703.3.2 Position. Braille shall be positioned below the corresponding text. If text is multi-lined, braille shall be placed below the entire text. Braille shall be separated 3/8 inch (9.5 mm) minimum from any other tactile characters and 3/8 inch (9.5 mm) minimum from raised borders and decorative elements.

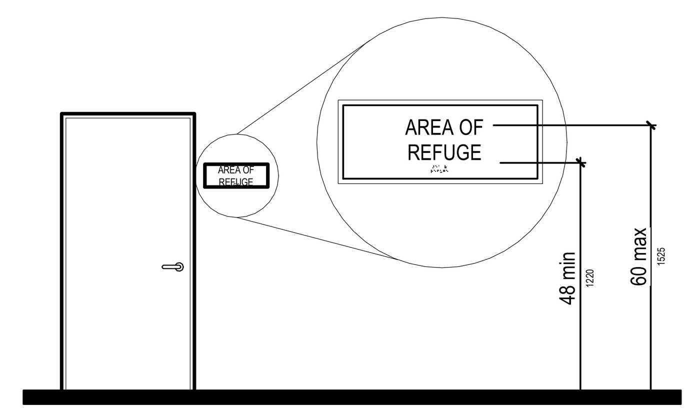

Figure 703.3.2 Position of Braille

703.4.2 Location. Where a tactile sign is provided at a door, the sign shall be located alongside the door at the latch side. Where a tactile sign is provided at double doors with one active leaf, the sign shall be located on the inactive leaf. Where a tactile sign is provided at double doors with two active leafs, the sign shall be located to the right of the right hand door. Where there is no wall space at the latch side of a single door or at the right side of double doors, signs shall be located on the nearest adjacent wall. Signs containing tactile characters shall be located so that a clear floor space of 18 inches (455 mm) minimum by 18 inches (455 mm) minimum, centered on the tactile characters, is provided beyond the arc of any door swing between the closed position and 45 degree open position.

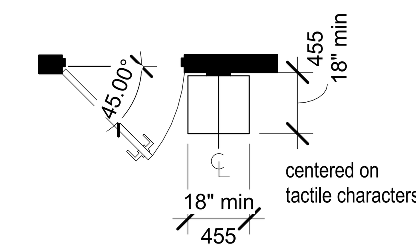

Figure 703.4.2 Location of Tactile Signs at Doors

703.5 Visual Characters. Visual characters shall comply with 703.5. 703.5.1 Finish and Contrast. Characters and their background shall have a non-glare finish. Characters shall contrast with their background with either light characters on a dark background or dark characters on a light background.

703.5.2 Case. Characters shall be uppercase or lowercase or a combination of both.

703.5.3 Style. Characters shall be conventional in form. Characters shall not be italic, oblique, script, highly decorative, or of other unusual forms.

703.5.4 Character Proportions. Characters shall be selected from fonts where the width of the uppercase letter "O" is 55 percent minimum and 110 percent maximum of the height of the uppercase letter "I".

703.5.5 Character Height. Minimum character height shall comply with Table 703.5.5. Viewing distance shall be measured as the horizontal distance between the character and an obstruction preventing further approach towards the sign. Character height shall be based on the uppercase letter "I".

703.5.6 Height From Finish Floor or Ground. Visual characters shall be 40 inches (1015 mm) minimum above the finish floor or ground.

703.5.7 Stroke Thickness. Stroke thickness of the uppercase letter "I" shall be 10 percent minimum and 30 percent maximum of the height of the character.

703.5.8 Character Spacing. Character spacing shall be measured between the two closest points of adjacent characters, excluding word spaces. Spacing between individual characters shall be 10 percent minimum and 35 percent maximum of character height. 703.5.9 Line Spacing. Spacing between the baselines of separate lines of characters within a message shall be 135 percent minimum and 170 percent maximum of the character height. 703.6 Pictograms. Pictograms shall comply with 703.6. 703.6.1 Pictogram Field. Pictograms shall have a field height of 6 inches (150 mm) minimum. Characters and braille shall not be located in the pictogram field.

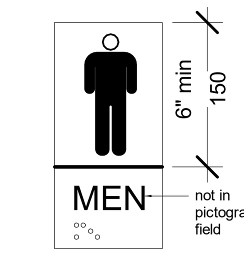

Figure 703.6.1 Pictogram Field dark-on-light.

703.6.2 Finish and Contrast. Pictograms and their field shall have a non-glare finish. Pictograms shall contrast with their field with either a light pictogram on a dark field or a dark pictogram on a light field.

703.6.3 Text Descriptors. Pictograms shall have text descriptors located directly below the pictogram field. Text descriptors shall comply with 703.2, 703.3 and 703.4. 703.7 Symbols of Accessibility. Symbols of accessibility shall comply with 703.7. 703.7.1 Finish and Contrast. Symbols of accessibility and their background shall have a non-glare finish. Symbols of accessibility shall contrast with their background with either a light symbol on a dark background or a dark symbol on a light background.

704 Telephones 704.1 General. Public telephones shall comply with 704.

704.2 Wheelchair Accessible Telephones. Wheelchair accessible telephones shall comply with 704.2.

704.2.1 Clear Floor or Ground Space. A clear floor or ground space complying with 305 shall be provided. The clear floor or ground space shall not be obstructed by bases, enclosures, or seats. Advisory 704.2.1 Clear Floor or Ground Space. Because clear floor and ground space is required to be unobstructed, telephones, enclosures and related telephone book storage cannot encroach on the required clear floor or ground space and must comply with the provisions for protruding objects. (See Section 307).

704.2.1.1 Parallel Approach. Where a parallel approach is provided, the distance from the edge of the telephone enclosure to the face of the telephone unit shall be 10 inches (255 mm) maximum.

ISSUE/REVISIONS

#	DESCRIPTION	DATE

ACCESSIBILITY GUIDELINES

DUNAWAY
118 Broadway Suite 201 San Antonio, Texas 78205
Tel: 210.267.5246
(TX REG. F-1114)

muñoz
723 S. Flores • San Antonio, Texas 78204
210.349.1163 • www.munoz-co.com

WORLD HERITAGE CENTER
SAN ANTONIO, TEXAS

INTERIM REVIEW DOCUMENTS

THE SCHEMATIC DESIGN DOCUMENTS DEPICTED THEREIN ARE INCOMPLETE AND MAY NOT BE USED FOR REGULATORY APPROVAL, PERMIT OR CONSTRUCTION.

GEOF EDWARDS
TEXAS REGISTRATION #18803

12.01.2021

JOB NO.	**A19021.00**
DESIGNED BY:	-
DRAWN BY:	-
CHECKED BY:	-
DATE:	**12/01/21**
SHEET:	**G-105**

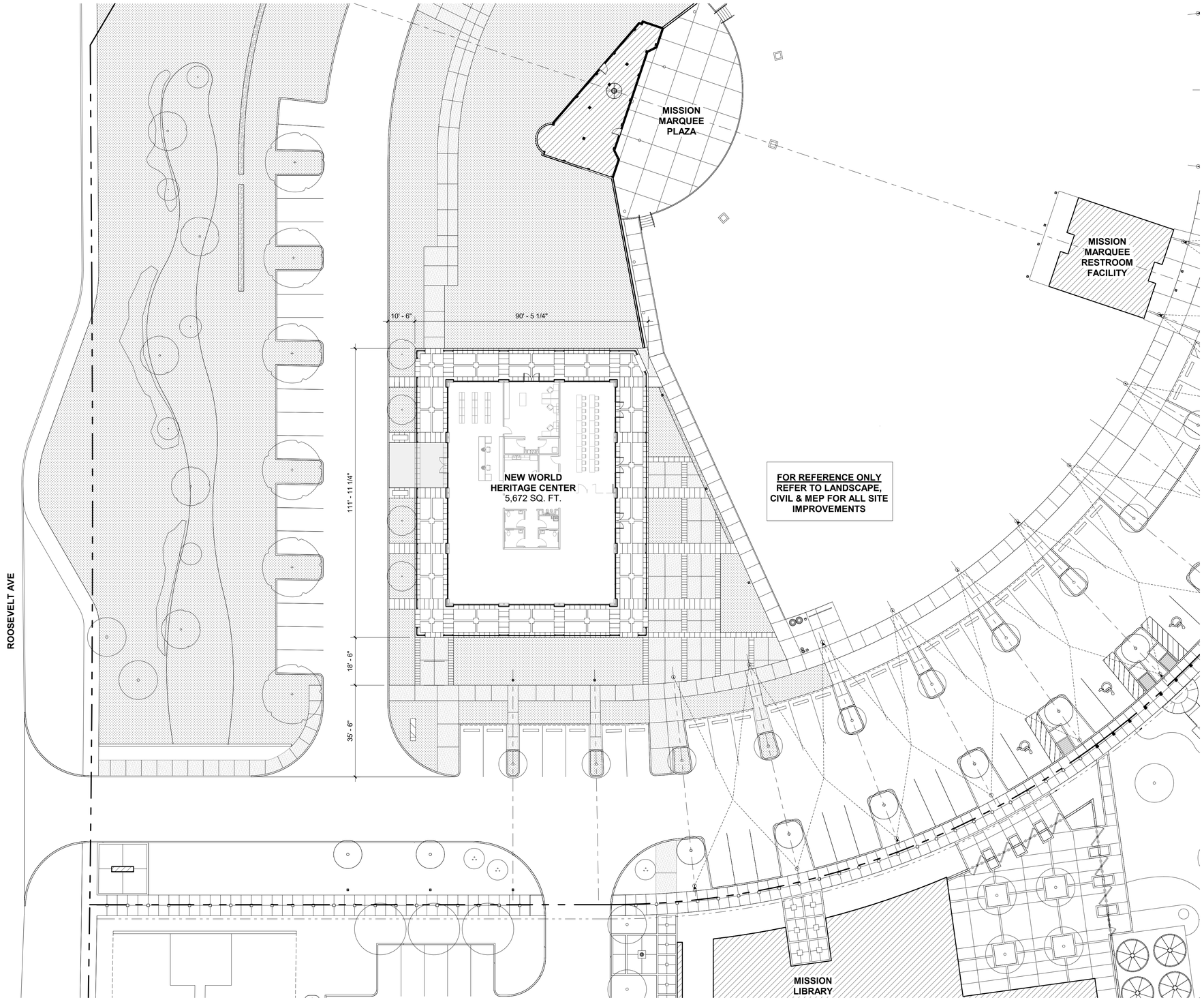

PLAN NORTH

1 **SITE PLAN**
1" = 20'-0"

SITE GENERAL NOTES

1. REFER TO SURVEY SHEETS FOR EXISTING CONDITIONS.FIELD VERIFY UNDERGROUND UTILITIES. CONTRACTOR TO FIELD VERIFY ALL EXISTING SITE DIMENSIONS AND CONDITIONS.

2. REFER TO CIVIL DRAWINGS FOR NEW GRADING AND BUILDING FINISH FLOOR ELEVATION.

3. REFER TO CIVIL DRAWINGS FOR NEW BUILDING AND NEW CURBS LOCATIONS.

4. REFER TO CIVIL AND MECH. DRAWINGS FOR NEW SITE UTILITIES.

5. REFER TO LANDSCAPE DRAWINGS FOR NEW LANDSCAPE AND NEW IRRIGATION.

6. REFER TO M.E.P. FOR SITE LIGHTING INFORMATION.

7. ALL NEW WALKS TO BE 4" CONCRETE, REINFORCED W/ #3 BARS AT 12" O.C. EACH WAY.

8. MAX. SIDEWALK CROSS SLOPE OF 2%.

9. AT SIDEWALKS, MOWSTRIP, CONCRETE PAVER EDGE CURBS. PROVIDE CONTROL JOINTS 5'-0" O.C. OR AS INDICATED ON PLANS, AND EXPANSION JOINTS AT 20'-0" O.C. MAX.

SITE LEGEND

- CONCRETE WALK
- EXISTING TREE, REFER TO LANDSCAPE
- NEW TREE, REFER TO LANDSCAPE
- PL — NEW POLE MOUNTED LIGHT, RE: ELEC.
- BL — NEW BOLLARD MOUNTED LIGHT, RE: ELEC.
- ACCESSIBLE ROUTE
- CL — NEW CANOPY LIGHT, RE: ELEC.
- UL — NEW GARDEN LIGHT, RE: ELEC.
- PLANTING AREA, REFER TO LANDSCAPE

KEYNOTE LEGEND

ISSUE/REVISIONS		
#	DESCRIPTION	DATE

SITE PLAN

WORLD HERITAGE CENTER
SAN ANTONIO, TEXAS

DUNAWAY
118 Broadway Suite 201, San Antonio, Texas 78205
Tel: 210.287.0348
(TX REG. F-1141)

muñoz
723 S. Flores • San Antonio, Texas 78204
210.349.1163 • www.munoz-co.com

INTERIM REVIEW DOCUMENTS

THE SCHEMATIC DESIGN DOCUMENTS DEPICTED THEREIN ARE INCOMPLETE AND MAY NOT BE USED FOR REGULATORY APPROVAL, PERMIT OR CONSTRUCTION.

GEOF EDWARDS
TEXAS REGISTRATION #18803

12.01.2021

JOB NO.	A19021.00
DESIGNED BY:	-
DRAWN BY:	-
CHECKED BY:	-
DATE:	12/01/21
SHEET:	A-101

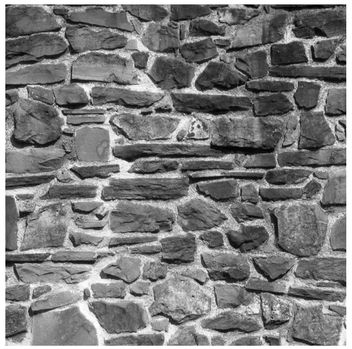

PATTERN AT WALLS

PATTERN AT COPING

5 TYP. STONE VENEER PATTERN

1 1/2" = 1'-0"

ISSUE/REVISIONS

#	DESCRIPTION	DATE

SITE DETAILS

DUNAWAY
118 Broadway Suite-201, San Antonio, Texas 78205
Tel: 210.287.0348
(TX REG. F-1144)

muñoz
723 S. Flores • San Antonio, Texas 78204
210.349.1163 • www.munoz-co.com

WORLD HERITAGE CENTER
SAN ANTONIO, TEXAS

INTERIM REVIEW DOCUMENTS

THE SCHEMATIC DESIGN DOCUMENTS DEPICTED THEREIN ARE INCOMPLETE AND MAY NOT BE USED FOR REGULATORY APPROVAL, PERMIT OR CONSTRUCTION.

GEOF EDWARDS
TEXAS REGISTRATION #18803

12.01.2021

JOB NO.	A19021.00
DESIGNED BY:	-
DRAWN BY:	-
CHECKED BY:	-
DATE:	12/01/21
SHEET:	A-102

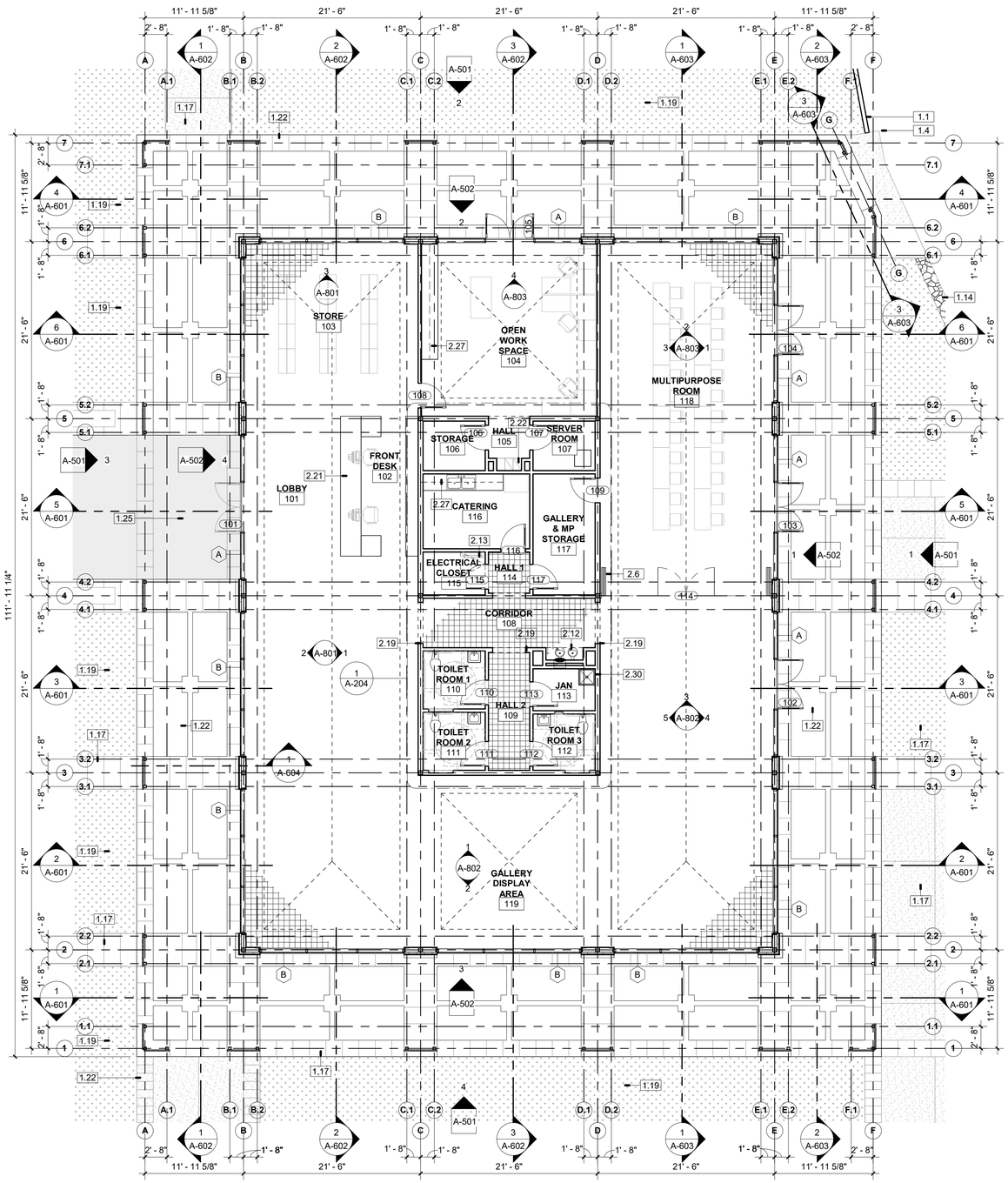

PLAN NORTH

1 FLOOR PLAN

1/8" = 1'-0"

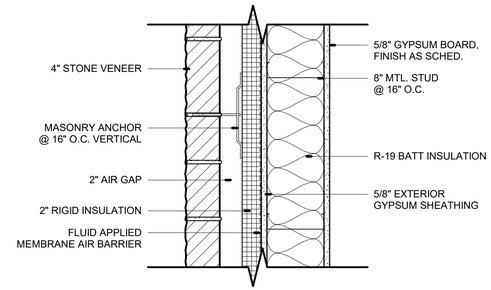

STONE VENEER
EXT. WALL ASSEMBLY

2 EXT. WALL ASSEMBLY - VENEER

1 1/2" = 1'-0"

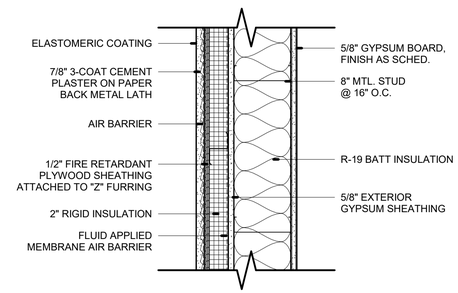

STUCCO
EXT. WALL ASSEMBLY

3 EXT. WALL ASSEMBLY - STUCCO

1 1/2" = 1'-0"

FLOOR PLAN GENERAL NOTES

1. TYPICAL ROOM DRYWALL PARTITION TO BE PARTITION TYPE P8 U.N.O. PROVIDE SOUND BATT INSUL. AT OFFICES, CONFERENCE ROOMS, CLASSROOMS AND STUDY SPACES. REFER TO PARTITION SCHEDULE ON SHEET A-401.

2. PROVIDE COLUMN FURRING PARTITION TYPE P3 AT ALL COLUMNS UNLESS U.N.O. REFER TO PARTITION SCHEDULE ON SHEET A-401.

3. REFER TO SHEET A-401 FOR ROOM FINISH SCHEDULE.

4. REFER TO SHEET A-401 FOR DOOR SCHEDULE.

5. REFER TO SHEET A-401 FOR WINDOW SCHEDULE, WINDOW NOTES AND WINDOW TYPE.

6. REFER TO SHEET A-101 FOR SITE INFORMATION.

7. REFER TO A-401 FOR MOUNTING HEIGHT SCHEDULE.

8. PROVIDE WINDOW SHADES TYPICAL AT ALL WINDOWS EXCEPT CORRIDOR LOCATIONS. REFER TO A-401 FOR ROLLER SHADE SCHEDULE.

9. ELECTRICAL BOXES ARE TO BE STAGGERED 16" MIN. NOT BACK TO BACK.

10. PROVIDE CORNER GUARDS AT ALL OUTSIDE CORNERS ALONG GENERAL CIRCULATION PATHS OF CORRIDORS AND LOBBIES. REFER TO DETAIL.

11. PROVIDE CONTROL JOINTS IN INTERIOR DRYWALL PARTITIONS PER MANUFACTURER'S RECOMMENDATIONS UNLESS SHOWN OTHERWISE IN DRAWINGS. COORDINATE EXACT PLACEMENT OF ANY CONTROL JOINTS REQUIRED BUT NOT INDICATED WITH THE ARCHITECT.

12. REFER TO MEP SHEETS FOR VERIFICATION OF ALL ELECTRICAL, DATA, VOICE AND VENTILATION LOCATIONS.

13. REFER TO SPECIFICATION FOR HARDWARE SETS FOR DOORS.

14. ALL FURNITURE INDICATED IN DASHED OR SHADED LINEWORK IS FOR GENERAL REFERENCE ONLY AND IS NOT IN CONTRACT.

15. PROVIDE SIGNAGE FOR EACH ROOM LOCATION, REFER TO SCHEDULE & DETAILS.

16. — - — DASHED LINE INDICATES 2 HR RATED PARTITION REFER TO CEILING PLAN FOR WALLS THAT EXTEND TO STRUCTURE.

17. (P) WALL TYPES (A) WINDOW TYPES

KEYNOTE LEGEND

1.1	EXISTING WALL TO REMAIN
1.4	EXISTING CONCRETE WALK TO REMAIN
1.14	NEW SITE WALL, RE. LANDSCAPE
1.17	NEW CONCRETE WALK, RE. CIVIL
1.19	NEW PLANTING AREA, RE. LANDSCAPE
1.22	NEW CONCRETE PAVING WITH STONE PAVER INSET, RE. LANDSCAPE
1.25	NEW CONCRETE PAVING AT MAIN ENTRANCE W/STONE PAVER INSET, RE. LANDSCAPE
2.6	FOLDABLE GLASS WALL AS SPEC.
2.12	DRINKING FOUNTAIN, AS SPEC.
2.13	ROOF HATCH LADDER AS SPEC.
2.19	CASED OPENING, SEE 07/A-402
2.21	CUSTOM RECEPTION DESK - SOLID SURFACE TOP W/LED UNDERLIGHTING. 24" WOOD VENEER BASE CABINETS & DRAWERS W/TWO ADJUSTABLE SHELVES. ALL DOORS AND DRAWERS TO BE LOCKABLE
2.22	LOCKERS AS SPEC.
2.27	BASE & WALL CABINETS
2.30	MOP SINK

ISSUE/REVISIONS #	DESCRIPTION	DATE

DUNAWAY
118 Broadway Suite 401, San Antonio, Texas 78205
Tel. 210.287.0348
(TX REG. F-1144)

muñoz
723 S. Flores • San Antonio, Texas 78204
210.349.1163 • www.munoz-co.com

FLOOR PLAN

WORLD HERITAGE CENTER
SAN ANTONIO, TEXAS

INTERIM REVIEW DOCUMENTS

THE SCHEMATIC DESIGN DOCUMENTS DEPICTED THEREIN ARE INCOMPLETE AND MAY NOT BE USED FOR REGULATORY APPROVAL, PERMIT OR CONSTRUCTION.

GEOF EDWARDS
TEXAS REGISTRATION #18803

12.01.2021

JOB NO.	A19021.00
DESIGNED BY:	-
DRAWN BY:	-
CHECKED BY:	-
DATE:	12/01/21
SHEET:	A-202

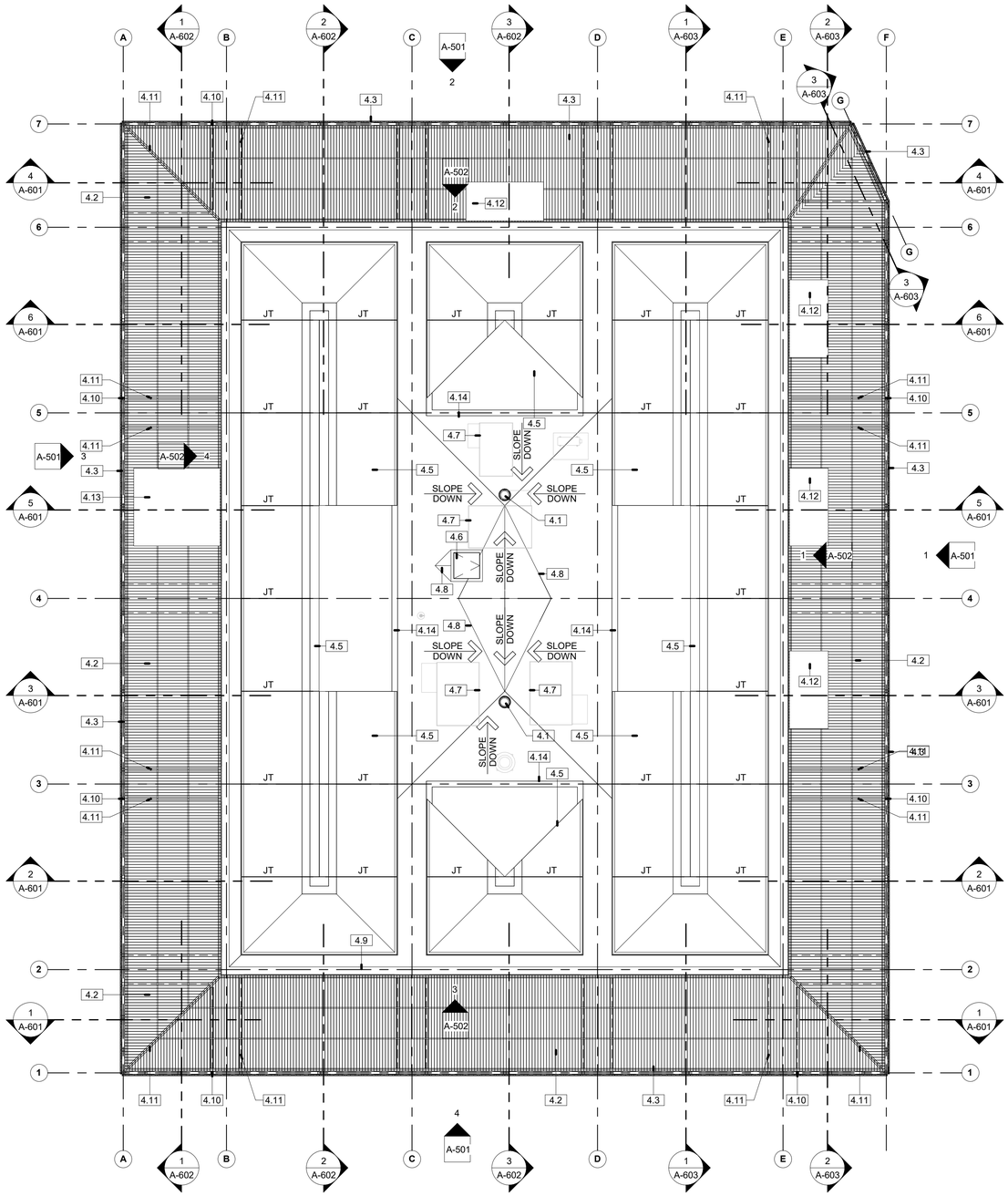

1 ROOF PLAN

1/8" = 1'-0"

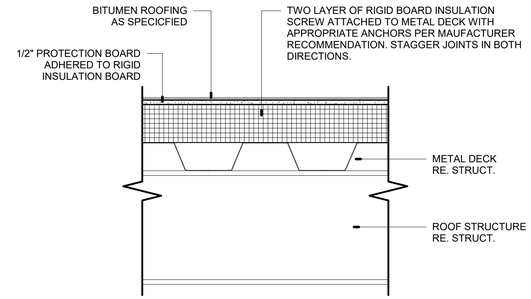

2 TYPICAL ROOF CONSTRUCTION DETAIL

1 1/2" = 1'-0"

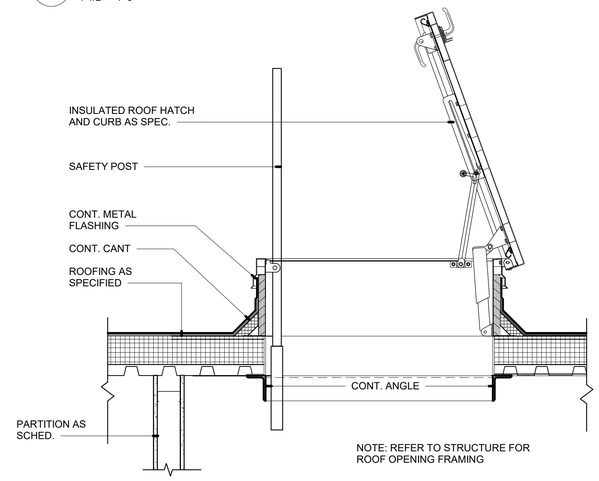

3 ROOF HATCH

1" = 1'-0"

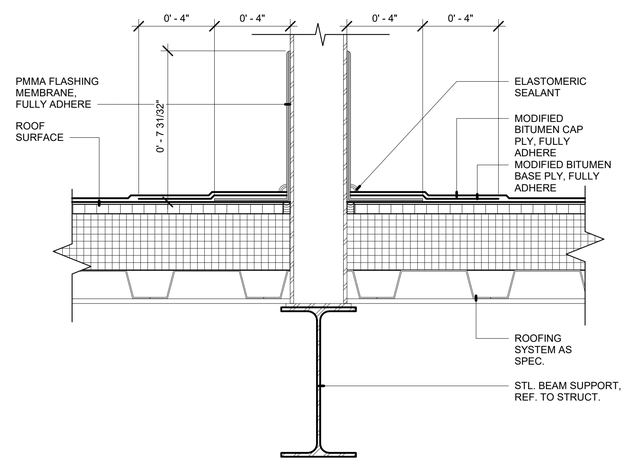

4 ROOF PENETRATION DETAIL

3" = 1'-0"

FLOOR PLAN GENERAL NOTES

1. TYPICAL ROOM DRYWALL PARTITION TO BE PARTITION TYPE P8 U.N.O. PROVIDE SOUND BATT INSUL. AT OFFICES, CONFERENCE ROOMS, CLASSROOMS AND STUDY SPACES. REFER TO PARTITION SCHEDULE ON SHEET A-401.

2. PROVIDE COLUMN FURRING PARTITION TYPE P3 AT ALL COLUMNS UNLESS U.N.O. REFER TO PARTITION SCHEDULE ON SHEET A-401.

3. REFER TO SHEET A-401 FOR ROOM FINISH SCHEDULE.

4. REFER TO SHEET A-401 FOR DOOR SCHEDULE.

5. REFER TO SHEET A-401 FOR WINDOW SCHEDULE, WINDOW NOTES AND WINDOW TYPE.

6. REFER TO SHEET A-101 FOR SITE INFORMATION.

7. REFER TO A-401 FOR MOUNTING HEIGHT SCHEDULE.

8. PROVIDE WINDOW SHADES TYPICAL AT ALL WINDOWS EXCEPT CORRIDOR LOCATIONS. REFER TO A-401 FOR ROLLER SHADE SCHEDULE.

9. ELECTRICAL BOXES ARE TO BE STAGGERED 16" MIN. NOT BACK TO BACK.

10. PROVIDE CORNER GUARDS AT ALL OUTSIDE CORNERS ALONG GENERAL CIRCULATION PATHS OF CORRIDORS AND LOBBIES. REFER TO DETAIL.

11. PROVIDE CONTROL JOINTS IN INTERIOR DRYWALL PARTITIONS PER MANUFACTURER'S RECOMMENDATIONS UNLESS SHOWN OTHERWISE IN DRAWINGS. COORDINATE EXACT PLACEMENT OF ANY CONTROL JOINTS REQUIRED BUT NOT INDICATED WITH THE ARCHITECT.

12. REFER TO MEP SHEETS FOR VERIFICATION OF ALL ELECTRICAL, DATA, VOICE AND VENTILATION LOCATIONS.

13. REFER TO SPECIFICATION FOR HARDWARE SETS FOR DOORS.

14. ALL FURNITURE INDICATED IN DASHED OR SHADED LINEWORK IS FOR GENERAL REFERENCE ONLY AND IS NOT IN CONTRACT.

15. PROVIDE SIGNAGE FOR EACH ROOM LOCATION, REFER TO SCHEDULE & DETAILS.

16. — - — DASHED LINE INDICATES 2 HR RATED PARTITION REFER TO CEILING PLAN FOR WALLS THAT EXTEND TO STRUCTURE.

17. (P) WALL TYPES (A) WINDOW TYPES

KEYNOTE LEGEND

4.1	ROOF DRAIN AND OVERFLOW DRAIN, RE. PLUMBING
4.2	SECTIONAL ALUMINUM TRELLIS SYSTEM, PAINTED
4.3	ALUMINUM PANEL SCREEN WALLS WITH CUSTOM CUTOUT PATTERN, PTD. SEE 01/A-402
4.5	PAINTED FIBER GLASS VAULTED ROOF SHAPES, SECTIONAL AND ON ROOF SUPPORTS
4.6	ROOF HATCH, SEE DETAIL 2/A-203
4.7	ROOF TOP EQUIPMENT, RE. MEP
4.8	CRICKETS, TYP.
4.9	STUCCO PARAPET, TYP.
4.10	STEEL COLUMN, PAINTED, RE. STRUCTURAL
4.11	STEEL BEAM, PAINTED, RE. STRUCTURAL
4.12	9'X4.5'X1/4" ALUM. SHEET PLATE OVER ENTRANCE, PTD.
4.13	9'X10'X1/4" ALUM. SHEET PLATE OVER MAIN ENTRANCE, PTD.
4.14	GALV. STEEL CHANNEL SPANNING BETWEEN ROOF SUPPORTS, RE. STRUCT.

ISSUE/REVISIONS #	DESCRIPTION	DATE

DUNAWAY
118 Broadway Suite 201, San Antonio, Texas 78205
Tel. 210.287.0348
Fax. 210.287.0349
(TX REG. F-1114)

muñoz
723 S. Flores • San Antonio, Texas 78204
210.349.1163 • www.munoz-co.com

ROOF PLAN

WORLD HERITAGE CENTER
SAN ANTONIO, TEXAS

INTERIM REVIEW DOCUMENTS

THE SCHEMATIC DESIGN DOCUMENTS DEPICTED THEREIN ARE INCOMPLETE AND MAY NOT BE USED FOR REGULATORY APPROVAL, PERMIT OR CONSTRUCTION.

GEOF EDWARDS
TEXAS REGISTRATION #18803

12.01.2021

JOB NO.	A19021.00
DESIGNED BY:	-
DRAWN BY:	-
CHECKED BY:	-
DATE:	12/01/21
SHEET:	A-203

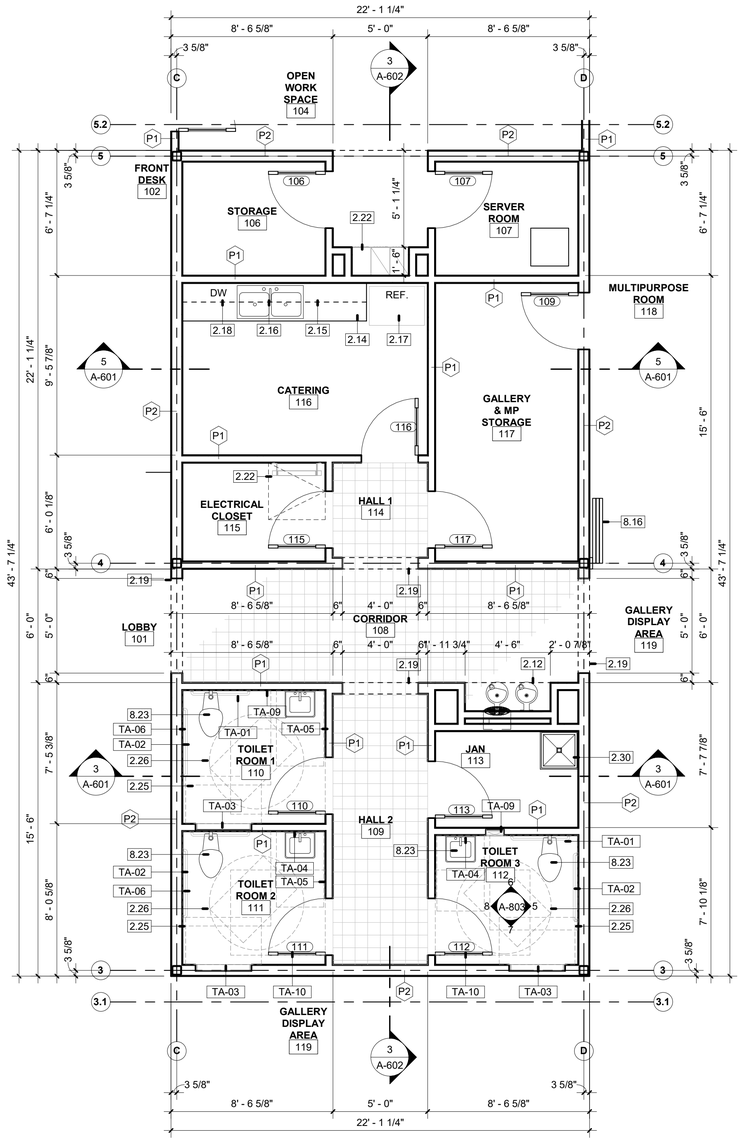

1 ENLARGED PLAN

1/4" = 1'-0"

MODEL	MODEL NO.	MFR.	DESCRIPTION	MOUNTING HEIGHT	REMARKS
TA-01	B-5806X36	BOBRICK	GRAB BAR	2'-10" TO CENTER	
TA-02	B-5806X42	BOBRICK	GRAB BAR	2'-10" TO CENTER	
TA-03	KB-110-SSRE	BOBRICK	VERTICAL RECESSED BABY CHANGING STATION	5'-3" TO TOP	
TA-04	B-290-2436	BOBRICK	SS FRAMED MIRROR	3'-3" TO BOTTOM	NON-HCP APPLICATIONS
TA-05	B-306	BOBRICK	RECESSED SOAP DISPENSER	3'-4" TO CENTER	
TA-06	B-2890	BOBRICK	SURFACE MTD. TISSUE DISPENSER	2'-8" TO TOP	
TA-07	B-354	BOBRICK	PARTITION MTD. NAPKIN DISPOSAL	2'-8" TO TOP	EA. SERVES TWO COMPARTMENTS
TA-08	B-3500	BOBRICK	RECESSED NAPKIN/TAMPON VENDOR	5'-0" TO TOP	
TA-09	B-39003	BOBRICK	RECESSED TOWEL DISPENSER/WASTE RECEPTICAL	5'-0" TO TOP	
TA-10	B-682	BOBRICK	COAT HOOK	5'-0" TO CENTER	
TA-11	B-223X24	BOBRICK	MOP/BROOM HOLDER	5'-0" TO CENTER	
TA-12	B-295X60	BOBRICK	SHELF	5'-0" TO CENTER	5'-0" IN LENGTH

KEYNOTE LEGEND

2.12	DRINKING FOUNTAIN, AS SPEC.
2.14	24" WOOD VENEER BASE CABINETS & DRAWERS W/ONE ADJUSTABLE SHELF & SOLID SURFACE COUNTERTOP
2.15	12" WOOD VENEER UPPER CABINETS W/TWO ADJUSTABLE SHELVES
2.16	UNDERMOUNTED DOUBLE COMPARTMENT SINK & GARBAGE DISPOSAL
2.17	REFRIGERATOR N.I.C.
2.18	DISHWASHER, ADA RESIDENTIAL GRADE
2.19	CASED OPENING, SEE 07/A-402
2.22	LOCKERS AS SPEC.
2.25	CLEAR FLOOR SPACE
2.26	WHEEL CHAIR TURNING SPACE
2.30	MOP SINK
8.16	FOLDABLE GLASS WALL AS SPEC.
8.23	PLUMBING FIXTURE, RE. PLUMBING
TA-01	GRAB BAR AS SCHED.
TA-02	GRAB BAR AS SCHED.
TA-03	BABY CHANGING STATION AS SCHED.
TA-04	MIRROR AS SCHED.
TA-05	SOAP DISPENSER AS SCHED.
TA-06	TISSUE DISPENSER AS SCHED.
TA-09	TOWEL DISPENSER/WASTE RECEPTICAL AS SCHED.
TA-10	COAT HOOK AS SCHED.

ISSUE/REVISIONS

#	DESCRIPTION	DATE

ENLARGED PLANS

WORLD HERITAGE CENTER
SAN ANTONIO, TEXAS

DUNAWAY
118 Broadway Suite-201, San Antonio, Texas 78205
Tel. 210.287.0348
(TX REG. F-1144)

muñoz
723 S. Flores • San Antonio, Texas 78204
210.349.1163 • www.munoz-co.com

INTERIM REVIEW DOCUMENTS

THE SCHEMATIC DESIGN DOCUMENTS DEPICTED THEREIN ARE INCOMPLETE AND MAY NOT BE USED FOR REGULATORY APPROVAL, PERMIT OR CONSTRUCTION.

GEOF EDWARDS
TEXAS REGISTRATION #18803

12.01.2021

JOB NO.	A19021.00
DESIGNED BY:	-
DRAWN BY:	-
CHECKED BY:	-
DATE:	12/01/21
SHEET:	A-204

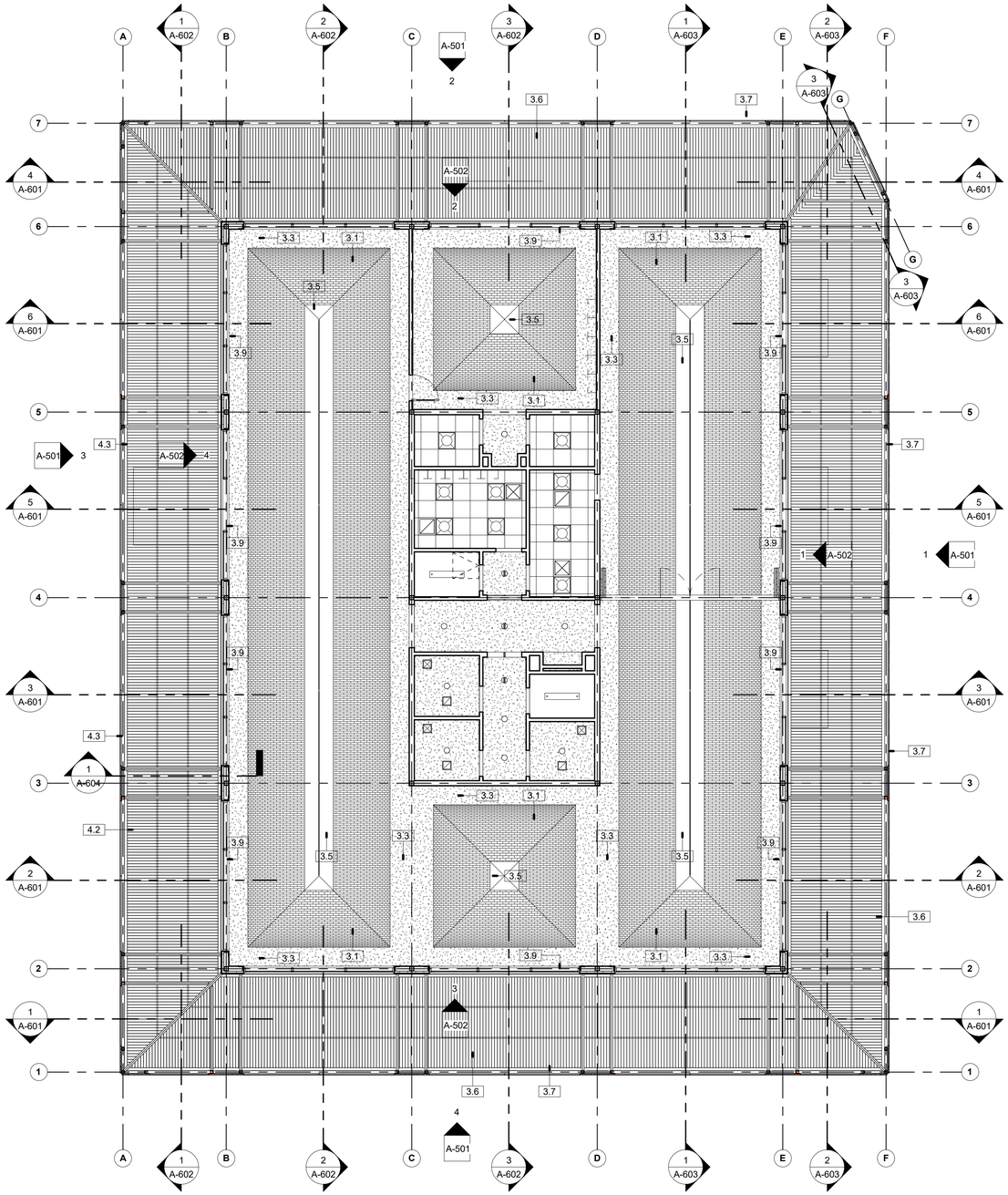

PLAN NORTH

1 REFLECTED CEILING PLAN

1/8" = 1'-0"

NOTE: WEIGHT AND LOADING CAPABILITIES OF NEW EQUIPMENT SUPPORT TO BE VERIFIED BY CONTRACTOR

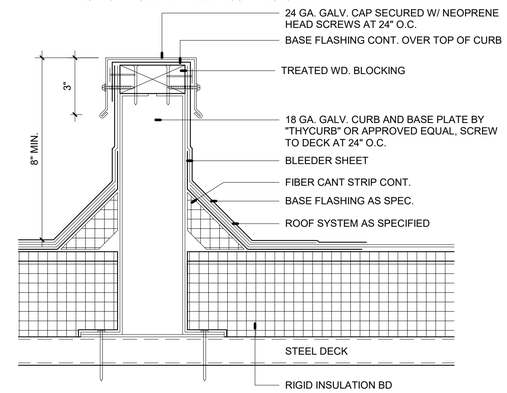

2 TYP. EQUIPMENT SUPPORT

3" = 1'-0"

RCP GENERAL NOTES

1. SEE FINISH SCHEDULE FOR CEILING TYPES U.N.O.
2. REFER TO LIFE SAFETY PLANS FOR RATED WALLS.
3. CEILING GRIDS CENTERED IN ROOM U.N.O.
4. ALL FIXTURES/ DEVICES MAY NOT BE INDICATED COORDINATE WITH MEP, A/V, & TELECOM DRAWINGS, AND PROVIDE ADDITIONAL FIXTURES. DEVICES AS REQUIRED.
5. REFER TO MECHANICAL FOR AIR DEVICES TYPICAL.
6. REFER TO ELECTRICAL FOR CEILING SPEAKER PLACEMENT.
7. REFER TO ELECTRICAL FOR LIGHTING AND POWER.
8. LIGHTING LAYOUT AT MECHANICAL ROOMS TO BE COORDINATED WITH M.E.P.
9. ALL CEILINGS TO BE 9'-0" A.F.F. U.N.O. - COORDINATE ANY DISCREPANCIES WITH CEILING HEIGHT AND MEP WORK WITH ARCHITECT BEFORE INSTALLATION OF ANY OVERHEAD ITEMS.
10. PROVIDE AND COORDINATE ACCESS DOORS WITH MEP.

RCP LEGEND

- OPEN TO STRUCTURE (NOT PAINTED)
- GYPSUM BOARD CEILING
- 24" X 24" LAY-IN CEILING
- BRICK BOVEDA CEILING
- RECESSED DOWN LIGHT FIXTURE
- D — RECESSED DOWN LIGHT FIXTURE - DIMMING
- RECESSED LED FIXTURE 24" X 24"
- RECESSED LED FIXTURE 24" X 48"
- R — WALL MOUNTED LINEAR FIXTURE - RESTROOM (REF. TO RCP FOR RUN LENGTHS) PROVIDE FINISH TRIM TO MATCH HOUSING WHERE REQUIRED.
- S — WALL MOUNTED LED SCONCE FIXTURE (EXTERIOR)
- RECESSED 12"X48" LINEAR FIXTURE
- PENDANT UTILITY FIXTURE
- LINEAR SUPPLY DIFFUSER
- SUPPLY DIFFUSER 24" X 24"
- RETURN/EXHAUST DIFFUSER 24" X 24"
- CEILING ACCESS PANEL
- PARTITIONS TO STRUCTURE
- RECESSED DROP DOWN PROJECTION SCREEN
- CEILING MOUNTED PROJECTOR MOUNT, OFCI, FINAL LOCATION OF MOUNT TO BE COORDINATED WITH OWNER.

KEYNOTE LEGEND

3.6	SECTIONAL ALUMINUM TRELLIS SYSTEM, PTD.
3.7	METAL PANEL SCREEN WALLS WITH CUSTOM CUTOUT PATTERN, PTD. SEE 01/A-402
4.3	ALUMINUM PANEL SCREEN WALLS WITH CUSTOM CUTOUT PATTERN, PTD. SEE 01/A-402

ISSUE/REVISIONS #	DESCRIPTION	DATE

REFLECTED CEILING PLAN

WORLD HERITAGE CENTER
SAN ANTONIO, TEXAS

DUNAWAY
118 Broadway Suite-201, San Antonio, Texas 78205
Tel: 210.287.0348
(TX REG. F-1114)

muñoz
723 S. Flores • San Antonio, Texas 78204
210.349.1163 • www.munoz-co.com

INTERIM REVIEW DOCUMENTS

THE SCHEMATIC DESIGN DOCUMENTS DEPICTED THEREIN ARE INCOMPLETE AND MAY NOT BE USED FOR REGULATORY APPROVAL, PERMIT OR CONSTRUCTION.

GEOF EDWARDS
TEXAS REGISTRATION #18803

12.01.2021

JOB NO.	A19021.00
DESIGNED BY:	-
DRAWN BY:	-
CHECKED BY:	-
DATE:	12/01/21
SHEET:	A-301

ROOM FINISH SCHEDULE - LEVEL 1										
ROOM NO.	NAME	FLOOR	BASE	NORTH WALL	SOUTH WALL	EAST WALL	WEST WALL	CEILING	ROLLER SHADES	COMMENTS
101	LOBBY	MT	ARB	-	-	-	PT	BV & PT		
102	FRONT DESK	MT	ARB	-	-	-	PT	BV & PT		
103	STORE	MT	ARB	-	-	-	PT	BV & PT		
104	OPEN WORK SPACE	MT	ARB	-	PT	PT	PT	BV & PT		
105	HALL	MT	ARB	PT	PT	PT	PT	ACP		
106	STORAGE	SC	RB	PT	PT	PT	PT	ACP		
107	SERVER ROOM	SC	RB	PT	PT	PT	PT	ACP		
108	CORRIDOR	MT	ARB	WC	WC	WC	WC	PT		
109	HALL 2	MT	ARB	PT	PT	PT	PT	PT		
110	TOILET ROOM 1	CT	CT	CT	CT	CT	CT	PT		
111	TOILET ROOM 2	CT	CT	CT	CT	CT	CT	PT		
112	TOILET ROOM 3	CT	CT	CT	CT	CT	CT	PT		
113	JAN	SC	RB	PT	PT	PT	PT	ACP		
114	HALL 1	MT	ARB	PT	PT	PT	PT	PT		
115	ELECTRICAL CLOSET	SC	RB	PT	PT	PT	PT	PTS		
116	CATERING	SC	RB	PT	PT	PT	PT	ACP		
117	GALLERY & MP STORAGE	SC	RB	PT	PT	PT	PT	BV & PT		
118	MULTIPURPOSE ROOM	MT	ARB	PT	-	PT	-	BV & PT		
119	GALLERY DISPLAY AREA	MT	ARB	PT	PT	PT	PT	BV & PT		

WALL PARTITION SCHEDULE								
TYPE MARK	WIDTH	STUD SIZE	GWB-SIDE 1	GWB-SIDE 2	GAUGE	RATING	UL NUMBER	REMARKS
P1	1 1/2"	7/8"	5/8"	--	22	--	--	
P2	2 1/8"	7/8"	(2)5/8"	--	22	--	--	
P3	3 1/8"	2 1/2"	5/8"	--	22	--	--	
P4	4 1/4"	3 5/8"	5/8"	--	22	--	--	
P5	6 5/8"	6"	5/8"	--	22	--	--	
P6	4 7/8"	3 5/8"	(2)5/8"	--	22	--	--	
P7	7 1/4"	6"	(2)5/8"	--	22	--	--	
P8	4 7/8"	3 5/8"	5/8"	5/8"	22	1 HR	U419	EXTENT OF RATING INDICATED ON PLANS
P9	7 1/4"	6"	5/8"	5/8"	22	1 HR	U419	EXTENT OF RATING INDICATED ON PLANS
P10	5 1/2"	3 5/8"	(2)5/8"	5/8"	25	1 HR	U419	EXTENT OF RATING INDICATED ON PLANS.
P11	7 7/8"	6"	(2)5/8"	5/8"	22	1 HR	U419	EXTENT OF RATING INDICATED ON PLANS
P12	6 1/8"	3 5/8"	(2)5/8"	(2)5/8"	22	2 HR	U419	EXTENT OF RATING INDICATED ON PLANS

DOOR SCHEDULE											
NUMBER	TYPE	WIDTH	HEIGHT	DOOR MATERIAL	DOOR FINISH	FRAME MATERIAL	FRAME FINISH	HEAD DTL	JAMB DTL	SILL DTL	REMARKS
101	(PR) A	6' - 0"	8' - 0"	ALUM./GLASS	PTD. DARK BRONZE						
102	(PR) A	6' - 0"	8' - 0"	ALUM./GLASS	PTD. DARK BRONZE						
103	(PR) A	6' - 0"	8' - 0"	ALUM./GLASS	PTD. DARK BRONZE						
104	(PR) A	6' - 0"	8' - 0"	ALUM./GLASS	PTD. DARK BRONZE						
105	(PR) A	5' - 10"	8' - 0"	ALUM./GLASS	PTD. DARK BRONZE						
106	B	3' - 0"	7' - 0"	WOOD/WD. PANEL	TRANS.	ALUM.	PTD. DARK BRONZE				
107	B	3' - 0"	7' - 0"	WOOD/WD. PANEL	TRANS.	ALUM.	PTD. DARK BRONZE				
108	C	3' - 0"	7' - 0"	WOOD/GLASS	TRANS.	ALUM.	PTD. DARK BRONZE				
109	B	3' - 0"	7' - 0"	WOOD/WD. PANEL	TRANS.	ALUM.	PTD. DARK BRONZE				
110	B	3' - 0"	7' - 0"	WOOD/WD. PANEL	TRANS.	ALUM.	PTD. DARK BRONZE				
111	B	3' - 0"	7' - 0"	WOOD/WD. PANEL	TRANS.	ALUM.	PTD. DARK BRONZE				
112	B	3' - 0"	7' - 0"	WOOD/WD. PANEL	TRANS.	ALUM.	PTD. DARK BRONZE				
113	B	3' - 0"	7' - 0"	WOOD/WD. PANEL	TRANS.	ALUM.	PTD. DARK BRONZE				
114	(PR) A	20' - 10 3/4"	14' - 0"	ALUM./GLASS	PTD. DARK BRONZE	ALUM.	PTD. DARK BRONZE				PART OF FOLDING PARTITION
115	B	3' - 0"	7' - 0"	WOOD/WD. PANEL	TRANS.	ALUM.	PTD. DARK BRONZE				
116	B	3' - 0"	7' - 0"	WOOD/WD. PANEL	TRANS.	ALUM.	PTD. DARK BRONZE				
117	B	3' - 0"	7' - 0"	WOOD/WD. PANEL	TRANS.	ALUM.	PTD. DARK BRONZE				

INSULATION LEGEND		
TYPE	DESCRIPTION	SPEC. SECTION
INSUL. TYPE 1	RIGID BOARD INSULATION - R 30 (ROOF)	075100
INSUL. TYPE 2	RIGID BOARD INSULATION - R 11 (EXTERIOR MASONRY WALLS)	072100
INSUL. TYPE 3	NOT USED	072100
INSUL. TYPE 4	BATT INSULATION - R 19 - FACED (STUDS)	072100
INSUL. TYPE 5	SOUND BATT INSULATION - 3" THICK (INT. PARTITIONS)	072100
INSUL. TYPE 6	NOT USED	072100
INSUL. TYPE 7	NOT USED	078413
INSUL. TYPE 8	NOT USED	072100

MOUNTING HEIGHT SCHEDULE		
DESCRIPTION	MOUNTING HEIGHT	COMMENT
WATER CLOSET STANDARD	1' - 3" TO RIM	FLOOR OR WALL
WATER CLOSET HC ADULT	1' - 5" TO TOP OF SEAT	FLOOR OR WALL
URINAL STANDARD	2' - 0" TO RIM	
URINAL HC	1' - 5" TO RIM	
WALL HUNG LAVATORY STANDARD	2' - 10" TO RIM	
WALL HUNG LAVATORY HC	2' - 10" TO RIM	2' - 5" MIN. CLEAR UNDER APRON
ELECTRIC DRINKING FOUNTAIN	3' - 4" TO SPOUT	
ELECTRIC DRINKING FOUNTAIN HCP	3' - 0" TO SPOUT	
SWITCHES	4' - 0" TO CENTER	
WALL TELEPHONE OUTLETS	4' - 0" TO CENTER	
RECEPTACLES/PHONE OUTLETS	18" TO CENTER	
ABOVE COUNTER OUTLETS	6" ABOVE COUNTER	OUTLETS MOUNTED HORIZ.
PAY TELEPHONES	4' - 6" TO COIN SLOT	
THERMOSTATS	4' - 0" TO CENTER	AT OPERABLE TYPE
ALARM PULL STATIONS	4' - 0" TO CENTER	
EXTINGUISHER CABINETS	4' - 6" TO TOP OF EXT. CAB	
TOILET ACCESSORIES	REFER TO SCHED.	
STAIR HANDRAILS	3' - 0" ABOVE NOSING	ABOVE NOSING AT STAIRS
STAIR GUARDRAILS	3' - 6" TO TOP	
LAVATORY COUNTERS	2' - 10" TO TOP	2' - 5" MIN. CLEAR UNDER APRON

INTERIOR FINISH LEGEND (REFER TO SPEC SECT. 019000)

MARK	DESCRIPTION	SPEC. SEC.
FLOOR		
MT	8"X8" CEMENT TILE	--
CT	12"X24" CERAMIC TILE	
SC	SEALED CONCRETE	
CPT	MODULAR CARPET TILE	
VCT	12"X12" VYNIL COMPOSITION TILE	
WALL		
PT	PAINTED GYPSUM BOARD	---
CT	12"X24" CERAMIC TILE	
WC	WALL COVERING	
BASE		
RB	4" RESILIENT BASE	----
CB	4" CARPET BASE	
CTB	4" CEMENT BASE	
ARB	4" ALUMINUM REVEAL BASE	
CEILING		
BV	EXPOSED BRICK BOVEDA	---
PT	PAINT ON GYPSUM BOARD	
PTS	PAINT ON EXPOSED STRUCTURE	
ACP	2'X2' ACOUSTICAL PANEL	

PARTITION GENERAL NOTES

1. GYPSUM BOARD TO BE "TYPE-X FIRE RATED" WHERE RATED PARTITION ASSEMBLIES ARE REQUIRED. SEE FLOOR PLANS FOR INDICATED LOCATIONS. ALL GYPSUM BOARD ATTACHMENT AND JOINT FINISHING SHALL BE IN COMPLIANCE WITH TESTED ASSEMBLY.
2. FINISH LAYERS OF GYPSUM BOARD TO BE "WATER RESISTANT" TYPE WHERE THIN SET CERAMIC TILE FINISH IS SCHEDULED.
3. ALL SCHEDULED PARITTION STUDS SHALL BE BRACED TO STRUCTURE, FULL EXTENSION OF STUDS FROM FLOOR TO STRUCTURE IS REQUIRED WHERE EXTENSION OF PARTITION IS NOTED ON CEILING PLANS OR AT CONDITIONS NOT HAVING FINISH CEILING. WHERE FINISH CEILINGS OCCUR ON BOTH SIDES OF SCHEDULED PARTITION, STUDS MAY TERMINATE AT 6" ABOVE HIGHEST ADJACENT CEILING WITH METAL STUD KNEEE BRACING TO STRUCTURE AT 4'-0" MAX.
4. PROVIDE USG # 200B METAL TRIM AT ALL FINISH LAYER EDGES OF GYPSUM BOARD WHERE PARTITION MEETS DISSIMILAR MATERIALS.
5. AT ALL INTERIORS PARTITION SHALL INCLUDE 3 1/2" FRICTION-FIT ACOUSTICAL BATT INSULATION, FULL HEIGHT AT GYPSUM WALL BOARDS.
6. AT ALL PARTITIONS WHICH HAVE EXTENSIONS TO STRUCTURE (ABOVE FINISH CEILING), PROVIDE ACOUSTICAL SEALANT AROUND ENTIRE PERIMETER AND PROVIDE ACOUSTICAL SEALANT AROUND ALL PARTITION PENETRATIONS. WHERE VOIDS GREATER THAN 1/4" EXIST, PACK VOID WITH 1.5 PCF FIBERGLASS AND SEAL AIRTIGHT, ENTIRE PARTITION ASSEMBLY SHALL ACHIEVE AN AIRTIGHT SEAL. USE FIRE RATED SEALANT AT RATED PARTITIONS.
7. AT ALL PARTITIONS, STAGGER BACK-TO-BACK OUTLET BOXES ON OPPOSITE SIDES BY TWO STUDS WIDTH. SEAL ALL BOX OPENINGS WITH ACOUSTICAL SEALANT.
8. PROVIDE FIRE RATED WOOD BLOCKING IN ALL STUD ASSEMBLIES AS REQUIRED TO PROVIDE ANCHORAGE FOR WALL MOUNTED EQUIPMENT AND CASEWORK.
9. UNLESS NOTED OTHERWISE, ALL SCHEDULED PARTITION COMPONENTS SHALL EXTEND TO A LINE 6" ABOVE THE HIGHEST ADJACENT FINISH CEILING. REFER TO FINISH SCHEDULES AND CEILING PLANS FOR CEILING HEIGHTS. WHERE NO FINISH CEILING OCCURS, ALL COMPONENTS OF ADJACENT PARTITION SHALL EXTEND TO STRUCTURE.
10. REFER TO FINISH SCHEDULES AND DETAILS FOR ALL APPLIED PANELS AND FINISHES TO BASE PARTITION AS SCHEDULED, PARTITION THICKNESS INCLUDED DO NOT INCLUDE THESE TIMES.
11. DRY WALL CHASE WALL ASSEMBLIES INVOLVING TWO ROW OF METAL STUDS SHALL HAVE STUD ROWS BRACED TOGETHER WITH 12" HIGH, 5/8" GYPSUM BOARD BRACES AT 4'-0" O.C. VERTICALLY AT EACH.
12. PARTITION TYPES DONOT DETERMINE EXTERIOR WALL CONSTRUCTIONS, REFER TO WALL SECTIONS FOR CONSTRUCTION DESCRIPTIONS.
13. AT ELECTRICAL PANELS PROVIDE THICKER WALL TO CONCEAL PANEL/CONDUIT, PROVIDE DP-2B MIN.
14. FLOOR TRACK TO BE 18GA. UNLESS NOTED OTHERWISE.
15. PROVIDE METAL BACK-UP PLATE IN LIEU OF WOOD BLOCKING AT WALL MOUNTED CASEWORK, WALL MOUNTED EQUIPMENT, ETC.

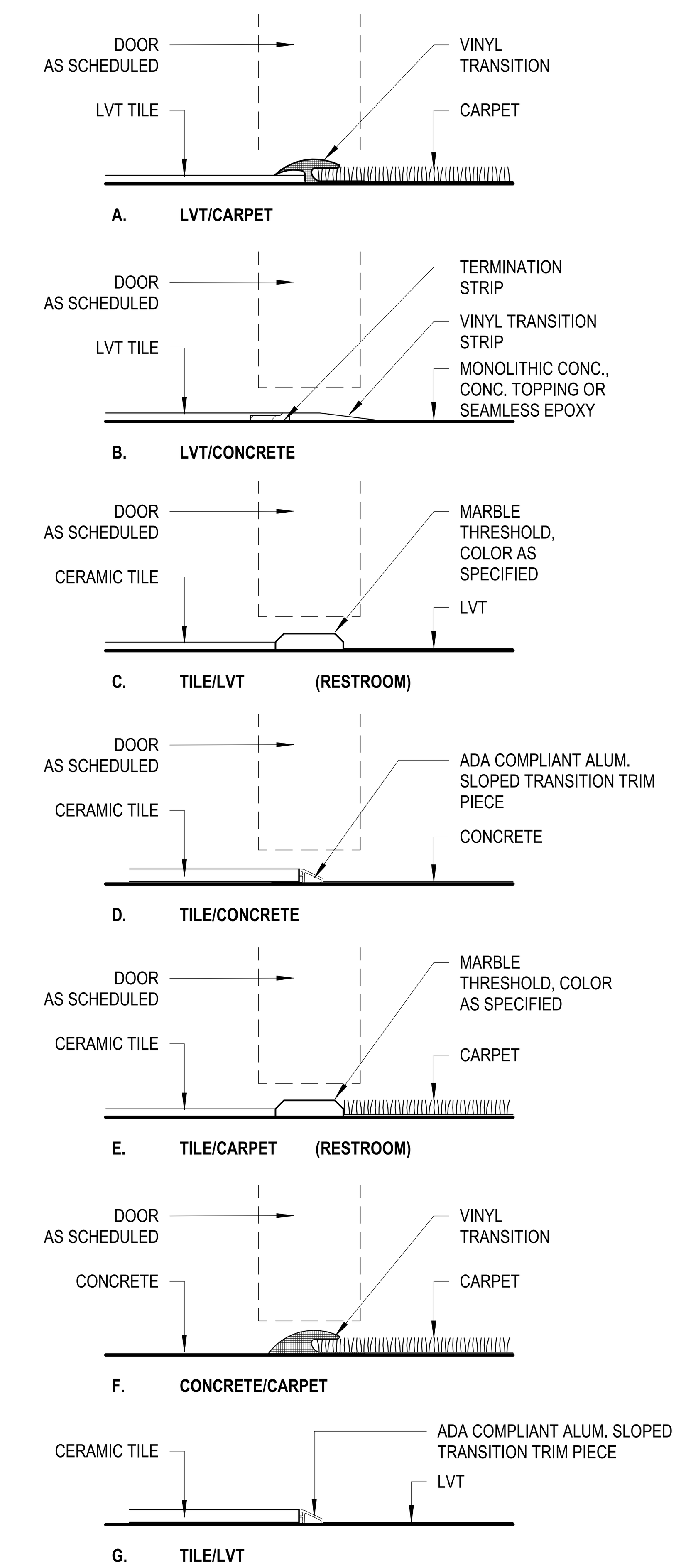

1 FLOOR TRANSITION DETAILS
3" = 1'-0"

GLASS SCHEDULE

TYPE	DESCRIPTION
GL-1	1" INSULATED GLASS UNIT SOLAR BAN 70, CLEAR
GL-2	1" INSULATED GLASS UNIT SOLAR BAN 70, CLEAR, TEMPERED
GL-3	1" INSULATED SPANDREL GLASS W/ CUSTOM COLOR AS SELECTED BY ARCHITECT.
GL-4	1/4" CLEAR TEMPERED GLASS
GL-5	1/4" MIRROR GLASS
GL-6	1/4" ONE WAY GLASS
GL-7	BULLET RESISTANT GLASS
GL-8	1/2" CLEAR TEMPERED GLASS

GLASS NOTES:

1. USE GLASS TYPE GL-1 AT ALL EXTERIOR FIXED GLASS WINDOWS & VISION GLASS WINDOWS U.N.O.
2. USE GLASS TYPE GL-4 AT ALL INTERIOR FIXED GLASS WINDOWS & DOOR AS REQUIRED BY CODE, U.N.O.
3. USE GLASS TYPE GL-5 AT ALL TOILET ROOM MIRRORS.
4. USE GLASS TYPE GL-2 AT EXTERIOR WINDOWS AS REQUIRED PER CODE.
5. USE GLASS TYPE GL-3 AT ALL EXTERIOR SPANDREL GLASS WINDOWS U.N.O.
6. EXTERIOR GLASS TO MEET WIND RATING.
7. SEE INTERIOR ELEVATIONS FOR ALL INTERIOR GLASS U.N.O.

WINDOW NOTES

1. ALL EXTERIOR WINDOWS TO BE EXTRUDED ALUMINUM FRAME WITH KYNAR FINISH WITH DARK BRONZE COLOR AS SPECIFIED.

ROLLER SHADE SCHEDULE

MARK	DESCRIPTION
RS-1	SURFACE-MOUNTED SINGLE MANUAL ROLLER SHADE
RS-2	CEILING-RECESSED/CEILING -MOUNTED SINGLE MOTORIZED ROLLER SHADE
RS-3	SURFACE-MOUNTED DOUBLE MANUAL ROLLER SHADE & BLACK OUT ROLLER SHADE

ROLLER SHADE NOTES:

1. NO INTERIOR WINDOW OTHER THAN MULTI-PURPOSE 118 WILL RECEIVE ROLLER SHADES U.N.O.
2. ALL NEW EXTERIOR WINDOWS TO RECEIVE "RS-1" ROLLER SHADES
3. REFER TO SPECIFICATIONS FOR ADDITIONAL INFORMATION ABOUT ROLLER SHADES.
4. ALL ROLLER SHADE ASSEMBLIES SHALL BE PROVIDED WITH DARK BRONZE ALUMINUM FASCIA TRIM.
5. PROVIDE ONE ROLLER SHADE SEGMENT TO SPAN ENTIRE ROOM U.N.O.
6. WHERE MULTIPLE SEGMENTS ARE REQUIRED, ALIGN ROLLER SHADE SEGMENTS WITH CENTER OF MULLION.

ISSUE/REVISIONS		
#	DESCRIPTION	DATE

SCHEDULES

DUNAWAY
118 Broadway Suite 201 San Antonio, Texas 78205
Tel: 210.267.5246
(TX REG. F-1114)

muñoz
723 S. Flores • San Antonio, Texas 78204
210.349.1163 • www.munoz-co.com

WORLD HERITAGE CENTER
SAN ANTONIO, TEXAS

INTERIM REVIEW DOCUMENTS

THE SCHEMATIC DESIGN DOCUMENTS DEPICTED THEREIN ARE INCOMPLETE AND MAY NOT BE USED FOR REGULATORY APPROVAL, PERMIT OR CONSTRUCTION.

GEOF EDWARDS
TEXAS REGISTRATION #18803

12.01.2021

JOB NO.	A19021.00
DESIGNED BY:	-
DRAWN BY:	-
CHECKED BY:	-
DATE:	06.23.2021
SHEET:	A-401

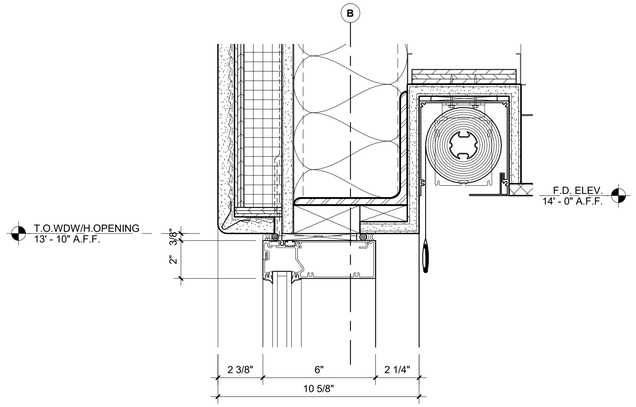

1 TYP. HEAD DETAIL
3" = 1'-0"

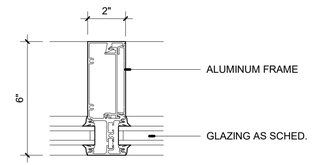

6 TYP. VERTICAL MULLION
3" = 1'-0"

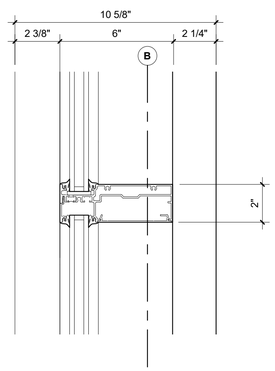

2 TYP. HORIZONTAL MULLION
3" = 1'-0"

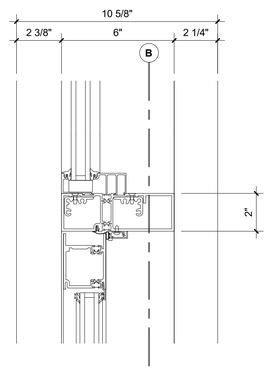

5 TYP. TRANSOM
3" = 1'-0"

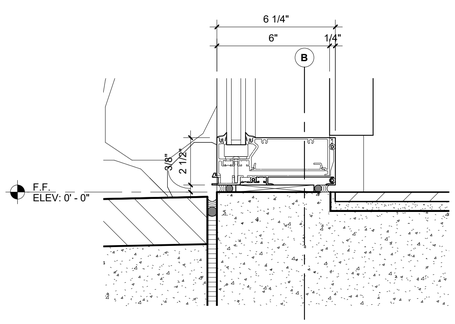

3 TYP. SILL DETAIL
3" = 1'-0"

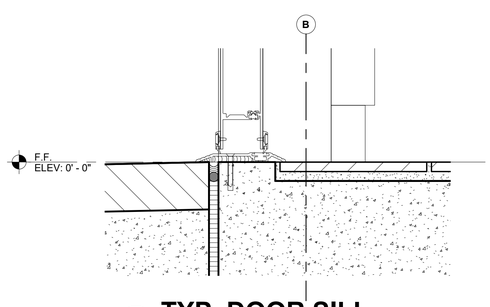

4 TYP. DOOR SILL
3" = 1'-0"

ISSUE/REVISIONS

#	DESCRIPTION	DATE

WINDOW & DOOR DETAILS

WORLD HERITAGE CENTER
SAN ANTONIO, TEXAS

DUNAWAY
118 Broadway Suite 201, San Antonio, Texas 78205
Tel: 210.287.0348
(TX REG. F-1114)

muñoz
723 S. Flores • San Antonio, Texas 78204
210.349.1163 • www.munoz-co.com

INTERIM REVIEW DOCUMENTS

THE SCHEMATIC DESIGN DOCUMENTS DEPICTED THEREIN ARE INCOMPLETE AND MAY NOT BE USED FOR REGULATORY APPROVAL, PERMIT OR CONSTRUCTION.

GEOF EDWARDS
TEXAS REGISTRATION #18803

12.01.2021

JOB NO.	A19021.00
DESIGNED BY:	-
DRAWN BY:	-
CHECKED BY:	-
DATE:	12/01/21
SHEET:	A-404

KEYNOTE LEGEND

5.1	PAINTED FIBER GLASS VAULTED ROOF SHAPES, SECTIONAL AND ON ROOF SUPPORTS
5.5	4" STONE VENEER BASE WALL
5.6	STUCCO WALL, SEE DETAIL 3/A-202
5.7	ALUMINUM PANEL SCREEN WALLS WITH CUSTOM CUTOUT PATTERN, PTD. SEE 01/A-402

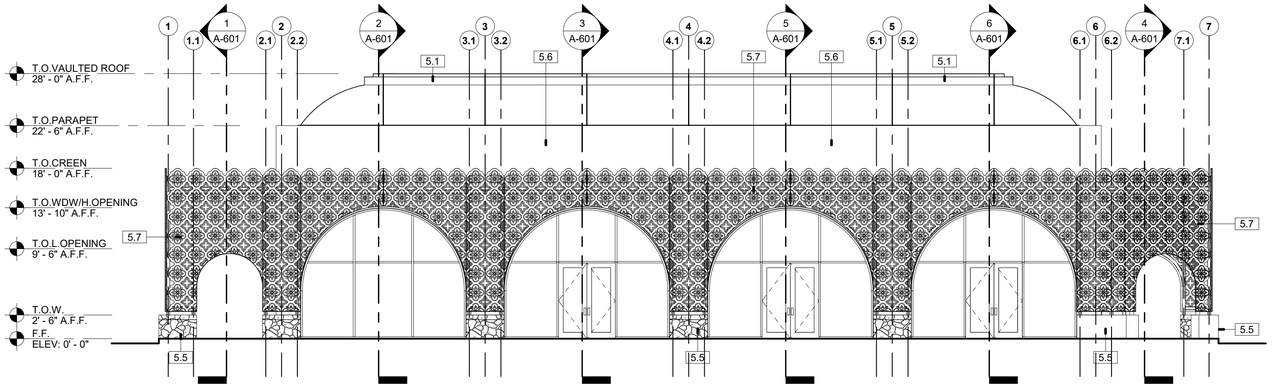

1 EAST ELEVATION A

1/8" = 1'-0"

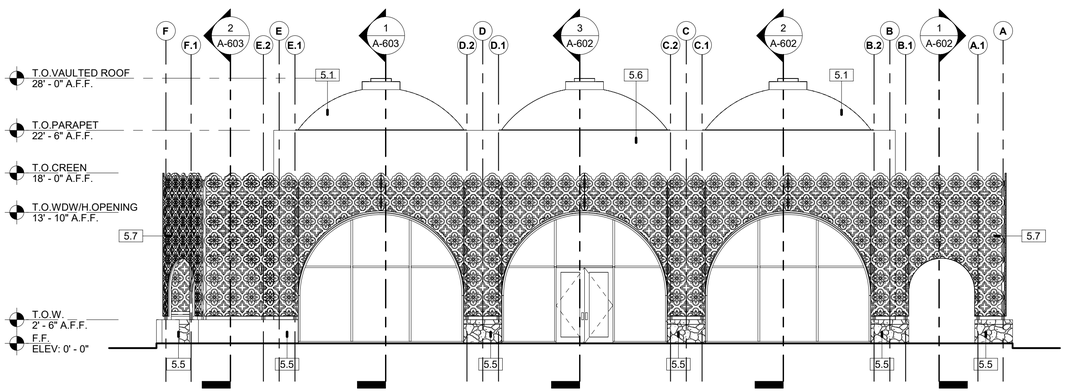

2 NORTH ELEVATION A

1/8" = 1'-0"

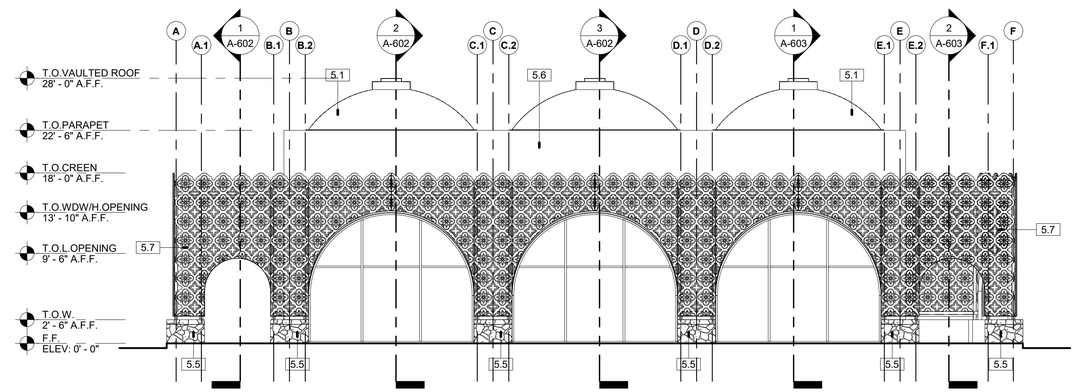

4 SOUTH ELEVATION A

1/8" = 1'-0"

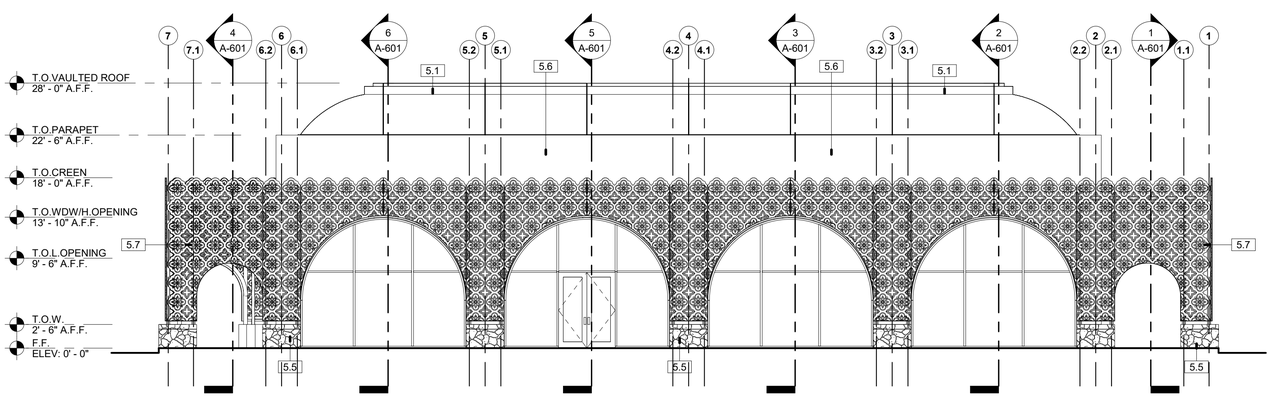

3 WEST ELEVATION A

1/8" = 1'-0"

ISSUE/REVISIONS

#	DESCRIPTION	DATE

EXTERIOR ELEVATIONS

WORLD HERITAGE CENTER
SAN ANTONIO, TEXAS

DUNAWAY
118 Broadway Suite 201, San Antonio, Texas 78205
Tel: 210.287.0348
(TX REG. F-1144)

muñoz
723 S. Flores • San Antonio, Texas 78204
210.349.1163 • www.munoz-co.com

INTERIM REVIEW DOCUMENTS

THE SCHEMATIC DESIGN DOCUMENTS DEPICTED THEREIN ARE INCOMPLETE AND MAY NOT BE USED FOR REGULATORY APPROVAL, PERMIT OR CONSTRUCTION.

GEOF EDWARDS
TEXAS REGISTRATION #18803

12.01.2021

JOB NO.	A19021.00
DESIGNED BY:	-
DRAWN BY:	-
CHECKED BY:	-
DATE:	12/01/21
SHEET:	A-501

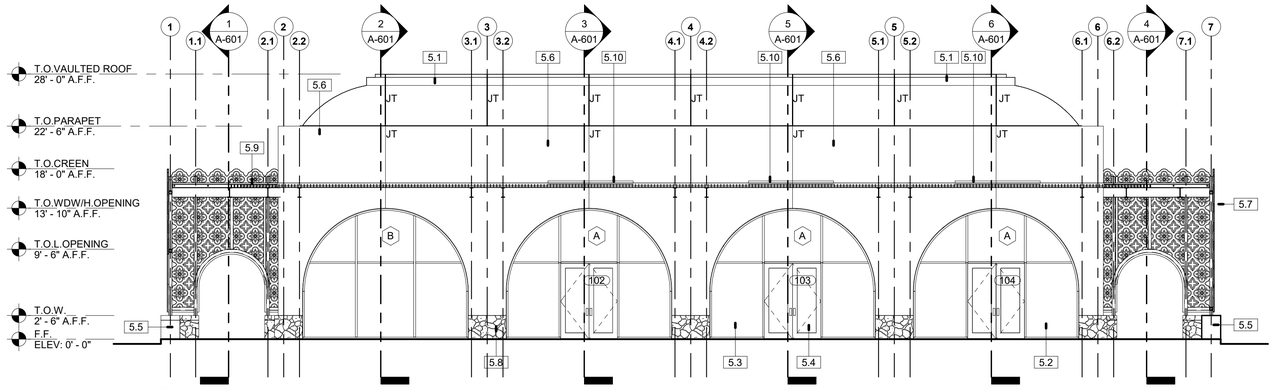

1 EAST ELEVATION B

1/8" = 1'-0"

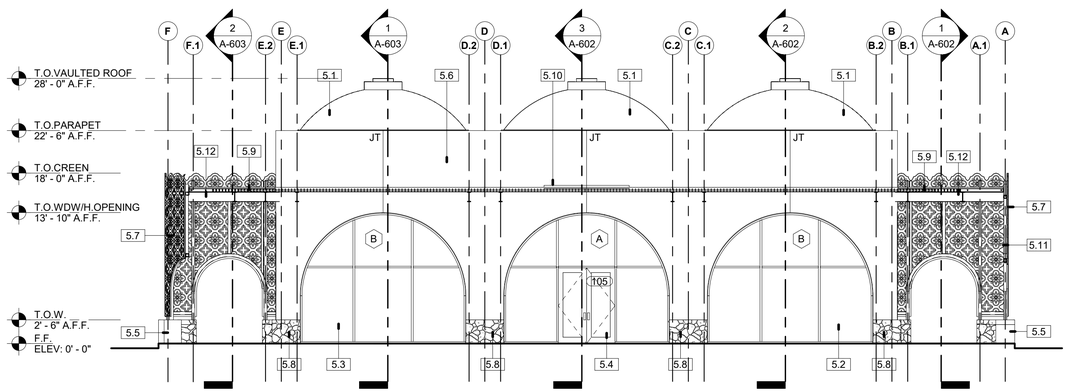

2 NORTH ELEVATION B

1/8" = 1'-0"

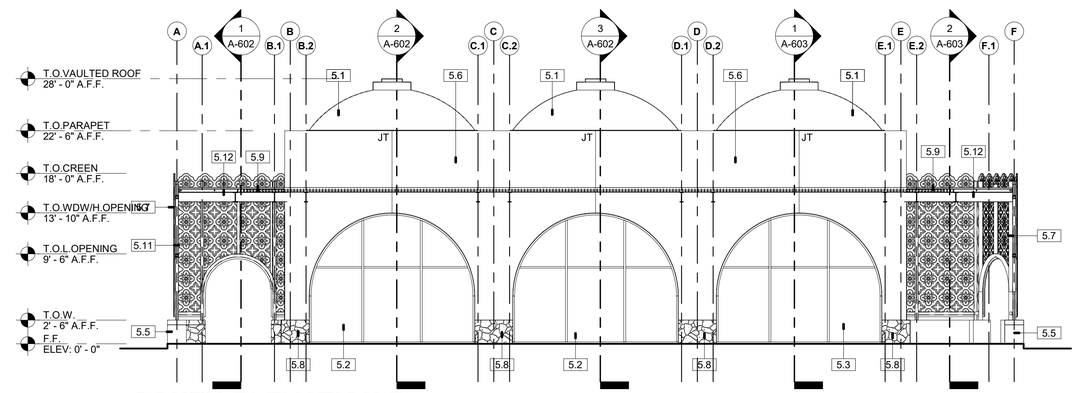

3 SOUTH ELEVATION B

1/8" = 1'-0"

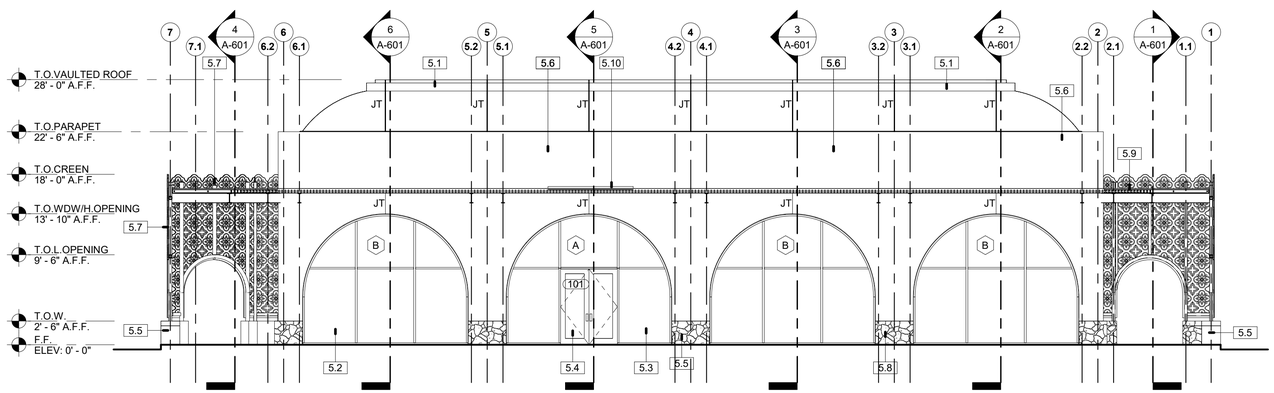

4 WEST ELEVATION B

1/8" = 1'-0"

KEYNOTE LEGEND

5.1	PAINTED FIBER GLASS VAULTED ROOF SHAPES, SECTIONAL AND ON ROOF SUPPORTS
5.2	ALUMINUM STOREFRONT SYSTEM
5.3	GLAZING AS SCHEDULED
5.4	DOOR AS SCHEDULED
5.5	4" STONE VENEER BASE WALL
5.6	STUCCO WALL, SEE DETAIL 3/A-202
5.7	ALUMINUM PANEL SCREEN WALLS WITH CUSTOM CUTOUT PATTERN, PTD. SEE 01/A-402
5.8	STONE VENEER WAINSCOT, SEE DETAIL 2/A-202
5.9	SECTIONAL ALUMINUM TRELLIS SYSTEM, PAINTED.
5.10	ALUMINUM SHEET PLATE & COUNTER FLASHING OVER ENTRANCE, PTD.
5.11	STEEL COLUMN, PAINTED. RE. STRUCT.
5.12	STEEL BEAM, PAINTED. RE. STRUCT.

ISSUE/REVISIONS

#	DESCRIPTION	DATE

EXTERIOR ELEVATIONS

DUNAWAY
118 Broadway Suite-201, San Antonio, Texas 78205
Tel. 210.287.0348
(TX REG. F-1141)

muñoz
723 S. Flores • San Antonio, Texas 78204
210.349.1163 • www.munoz-co.com

WORLD HERITAGE CENTER
SAN ANTONIO, TEXAS

INTERIM REVIEW DOCUMENTS

THE SCHEMATIC DESIGN DOCUMENTS DEPICTED THEREIN ARE INCOMPLETE AND MAY NOT BE USED FOR REGULATORY APPROVAL, PERMIT OR CONSTRUCTION.

GEOF EDWARDS
TEXAS REGISTRATION #18803

12.01.2021

JOB NO.	A19021.00
DESIGNED BY:	Author
DRAWN BY:	Author
CHECKED BY:	Checker
DATE:	12/01/21
SHEET:	A-502

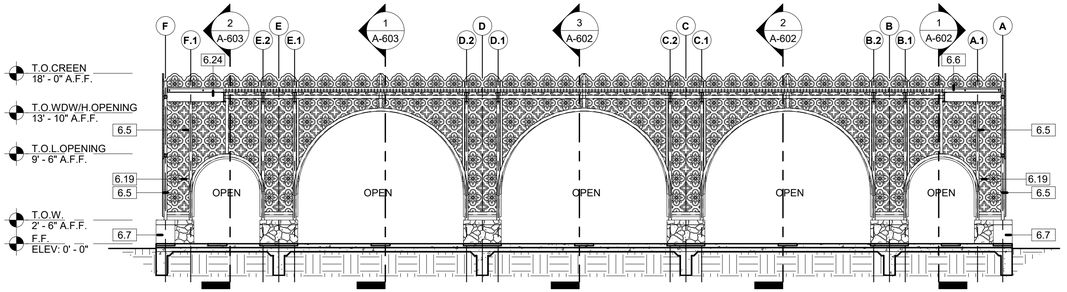

1 BUILDING SECTION

1/8" = 1'-0"

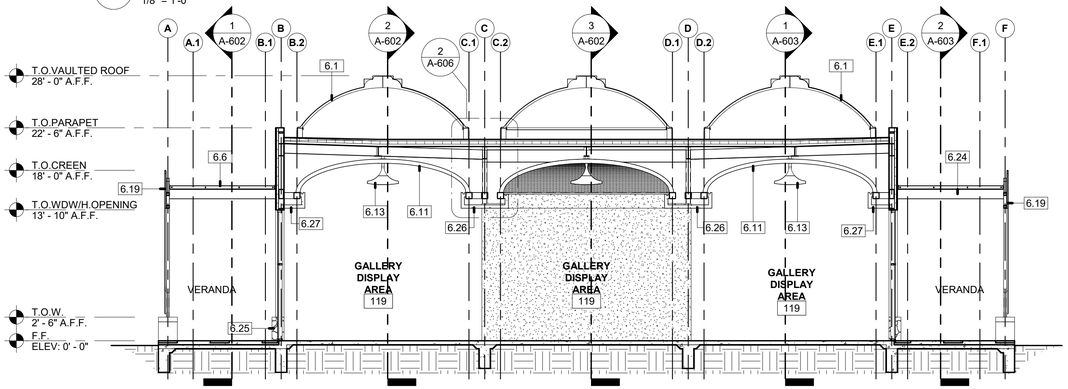

2 BUILDING SECTION

1/8" = 1'-0"

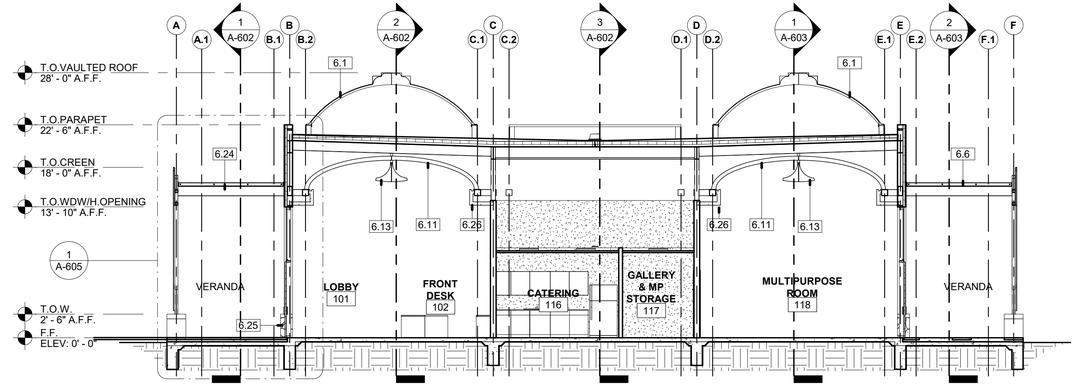

5 BUILDING SECTION

1/8" = 1'-0"

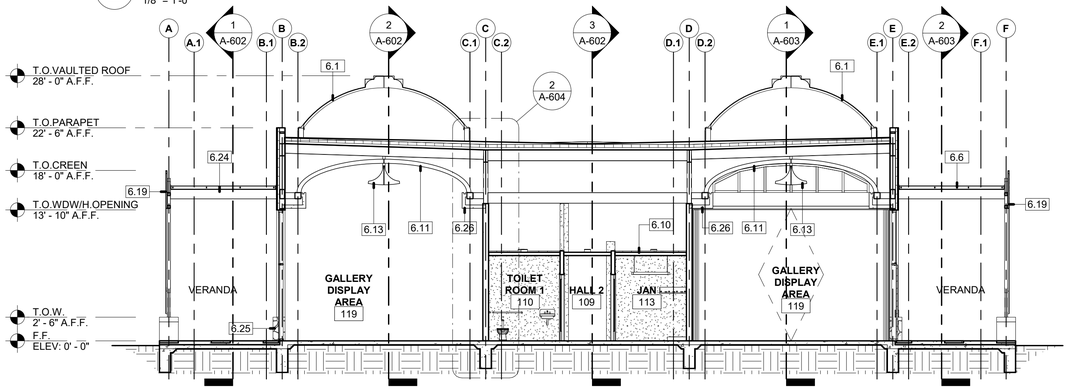

3 BUILDING SECTION

1/8" = 1'-0"

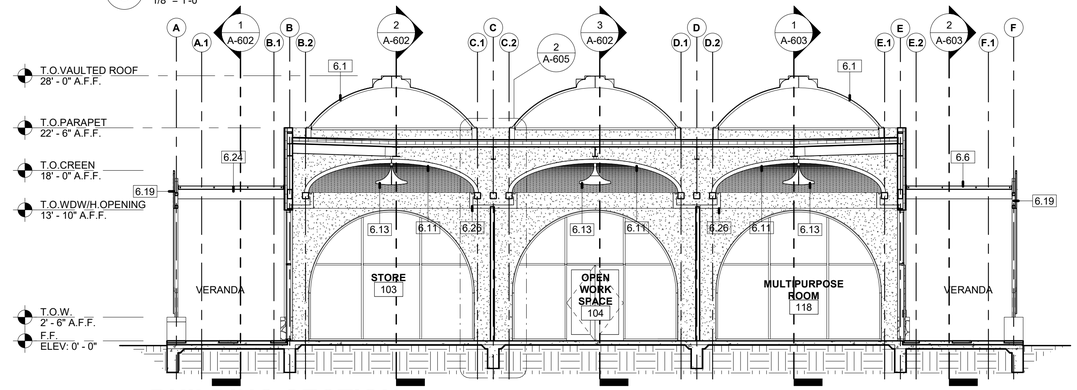

6 BUILDING SECTION

1/8" = 1'-0"

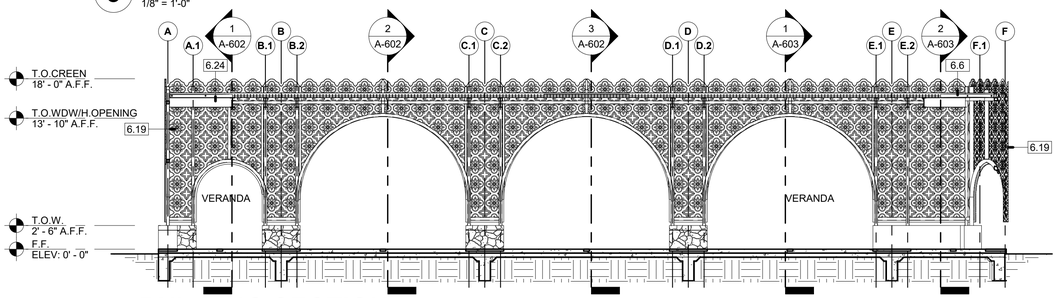

4 BUILDING SECTION

1/8" = 1'-0"

KEYNOTE LEGEND

6.1	PAINTED FIBER GLASS VAULTED ROOF SHAPES, SECTIONAL AND ON ROOF SUPPORTS
6.5	STEEL COLUMN, PAINTED. ALL ARCHITECTURAL STEEL TO BE SMOOTHED AND CLEANED PRIOR TO PAINTING.
6.6	SECTIONAL ALUMINUM TRELLIS SYSTEM, PAINTED.
6.7	4" STONE VENEER BASE WALL
6.10	SUSPENDED ACOUSTIC CEILING
6.11	1" BRICK VENEER BOVEDA CEILING
6.13	CUSTOM PENDANT LIGHT DIFUSER
6.19	ALUMINUM PANEL SCREEN WALLS WITH CUSTOM CUTOUT PATTERN, PTD. SEE 01/A-402
6.24	STEEL BEAM, PAINTED, RE. STRUCT.
6.25	STONE VENEER WAINSCOT, SEE DETAIL 2/A-202
6.26	GYP. BD. FURR DOWN WITH ACOUSTICAL TREATMENT AS SPEC.
6.27	MANUAL MECHOSHADE AT ALL EXT. GLASS

ISSUE/REVISIONS

#	DESCRIPTION	DATE

DUNAWAY
118 Broadway Suite 401, San Antonio, Texas 78205
Tel. 210.287.0348
(TX REG. F-1145)

muñoz
723 S. Flores • San Antonio, Texas 78204
210.349.1163 • www.munoz-co.com

BUILDING SECTIONS

WORLD HERITAGE CENTER
SAN ANTONIO, TEXAS

INTERIM REVIEW DOCUMENTS

THE SCHEMATIC DESIGN DOCUMENTS DEPICTED THEREIN ARE INCOMPLETE AND MAY NOT BE USED FOR REGULATORY APPROVAL, PERMIT OR CONSTRUCTION.

GEOF EDWARDS
TEXAS REGISTRATION #18803

12.01.2021

JOB NO.	A19021.00
DESIGNED BY:	-
DRAWN BY:	-
CHECKED BY:	-
DATE:	06.23.2021
SHEET:	A-601

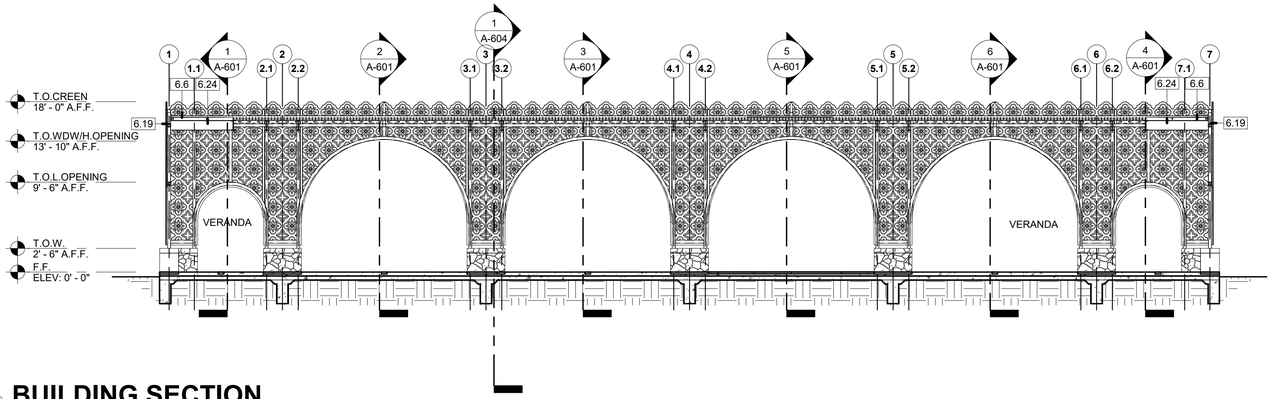

1 BUILDING SECTION

1/8" = 1'-0"

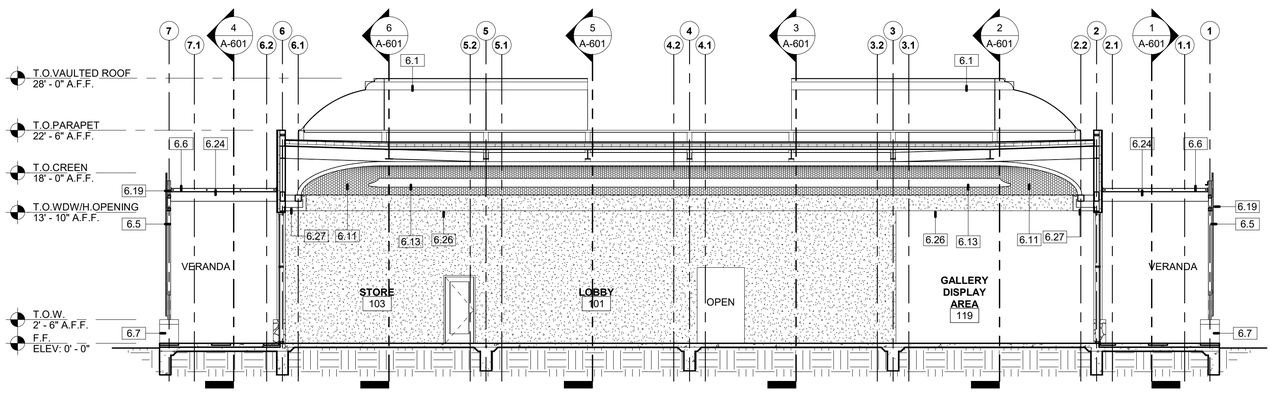

2 BUILDING SECTION

1/8" = 1'-0"

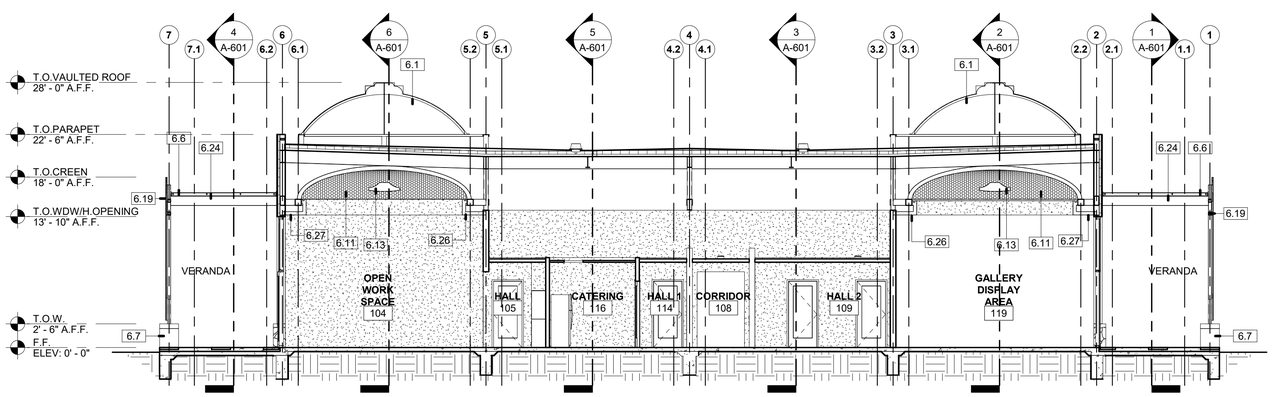

3 BUILDING SECTION

1/8" = 1'-0"

KEYNOTE LEGEND

6.1	PAINTED FIBER GLASS VAULTED ROOF SHAPES, SECTIONAL AND ON ROOF SUPPORTS
6.5	STEEL COLUMN, PAINTED. ALL ARCHITECTURAL STEEL TO BE SMOOTHED AND CLEANED PRIOR TO PAINTING.
6.6	SECTIONAL ALUMINUM TRELLIS SYSTEM, PAINTED.
6.7	4" STONE VENEER BASE WALL
6.11	1" BRICK VENEER BOVEDA CEILING
6.13	CUSTOM PENDANT LIGHT DIFUSER
6.19	ALUMINUM PANEL SCREEN WALLS WITH CUSTOM CUTOUT PATTERN, PTD. SEE 01/A-402
6.24	STEEL BEAM, PAINTED, RE. STRUCT.
6.26	GYP. BD. FURR DOWN WITH ACOUSTICAL TREATMENT AS SPEC.
6.27	MANUAL MECHOSHADE AT ALL EXT. GLASS

ISSUE/REVISIONS

#	DESCRIPTION	DATE

DUNAWAY
118 Broadway Suite 201, San Antonio, Texas 78205
Tel. 210.287.0348
(TX REG. F-1114)

muñoz
723 S. Flores • San Antonio, Texas 78204
210.349.1163 • www.munoz-co.com

BUILDING SECTIONS

WORLD HERITAGE CENTER
SAN ANTONIO, TEXAS

INTERIM REVIEW DOCUMENTS

THE SCHEMATIC DESIGN DOCUMENTS DEPICTED THEREIN ARE INCOMPLETE AND MAY NOT BE USED FOR REGULATORY APPROVAL, PERMIT OR CONSTRUCTION.

GEOF EDWARDS
TEXAS REGISTRATION #18803

12.01.2021

JOB NO.	A19021.00
DESIGNED BY:	-
DRAWN BY:	-
CHECKED BY:	-
DATE:	12/01/21
SHEET:	A-602

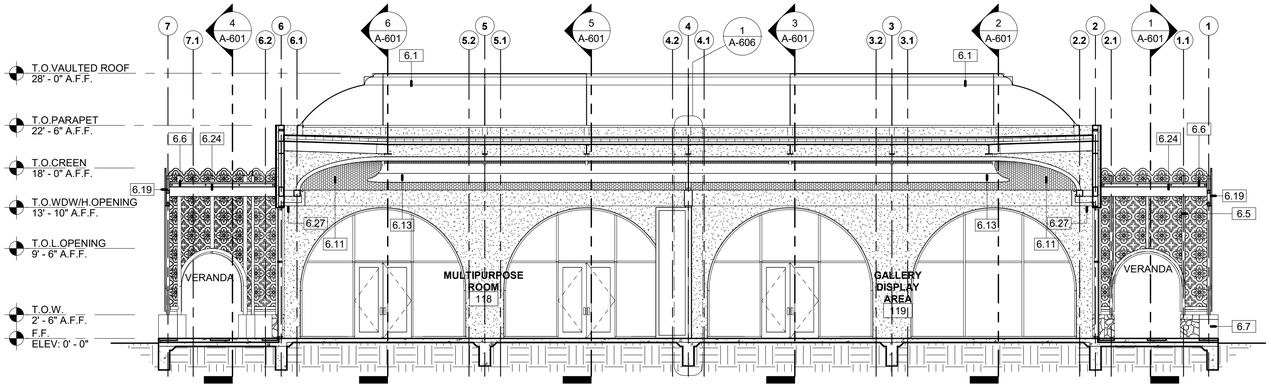

1 BUILDING SECTION

1/8" = 1'-0"

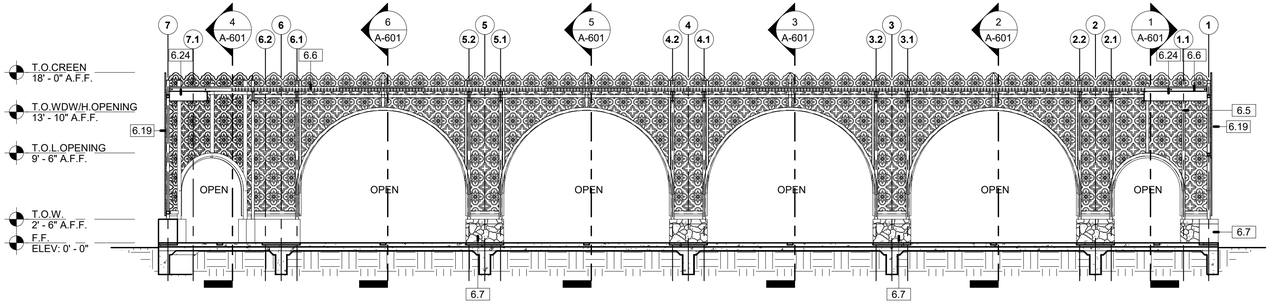

2 BUILDING SECTION

1/8" = 1'-0"

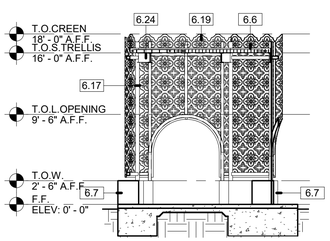

3 BUILDING SECTION

1/8" = 1'-0"

KEYNOTE LEGEND

6.1	PAINTED FIBER GLASS VAULTED ROOF SHAPES, SECTIONAL AND ON ROOF SUPPORTS
6.5	STEEL COLUMN, PAINTED. ALL ARCHITECTURAL STEEL TO BE SMOOTHED AND CLEANED PRIOR TO PAINTING.
6.6	SECTIONAL ALUMINUM TRELLIS SYSTEM, PAINTED.
6.7	4" STONE VENEER BASE WALL
6.11	1" BRICK VENEER BOVEDA CEILING
6.13	CUSTOM PENDANT LIGHT DIFUSER
6.17	STEEL STRUCTURE - REF. TO STRUCT.
6.19	ALUMINUM PANEL SCREEN WALLS WITH CUSTOM CUTOUT PATTERN, PTD. SEE 01/A-402
6.24	STEEL BEAM, PAINTED, RE. STRUCT.
6.27	MANUAL MECHOSHADE AT ALL EXT. GLASS

ISSUE/REVISIONS

#	DESCRIPTION	DATE

BUILDING SECTIONS

DUNAWAY
118 Broadway Suite 401, San Antonio, Texas 78205
Tel: 210.287.0348
(TX REG. F-1114)

muñoz
723 S. Flores • San Antonio, Texas 78204
210.349.1163 • www.munoz-co.com

WORLD HERITAGE CENTER
SAN ANTONIO, TEXAS

INTERIM REVIEW DOCUMENTS

THE SCHEMATIC DESIGN DOCUMENTS DEPICTED THEREIN ARE INCOMPLETE AND MAY NOT BE USED FOR REGULATORY APPROVAL, PERMIT OR CONSTRUCTION.

GEOF EDWARDS
TEXAS REGISTRATION #18803

12.01.2021

JOB NO.	A19021.00
DESIGNED BY:	-
DRAWN BY:	-
CHECKED BY:	-
DATE:	12/01/21
SHEET:	A-603

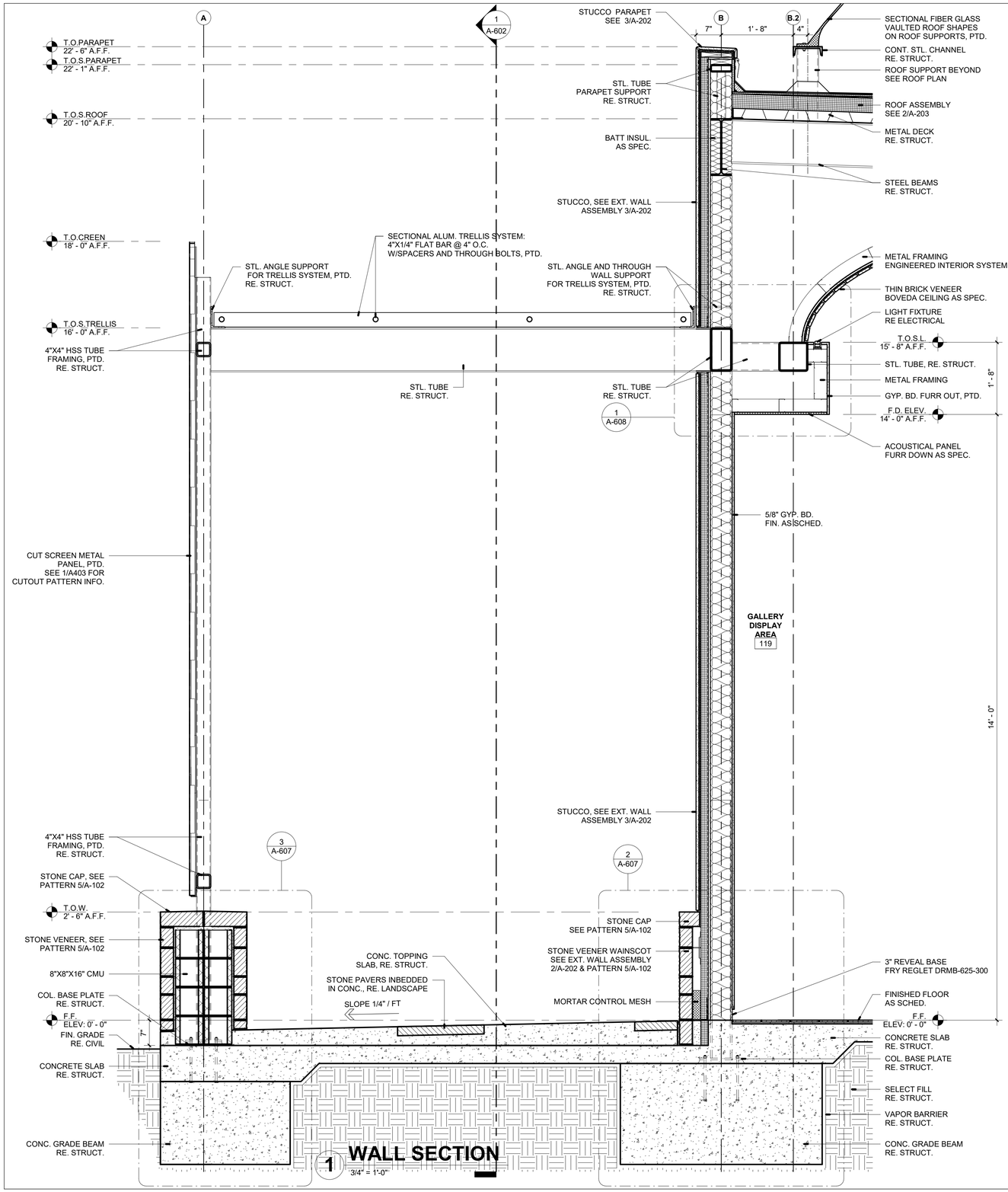

1 **WALL SECTION**
3/4" = 1'-0"

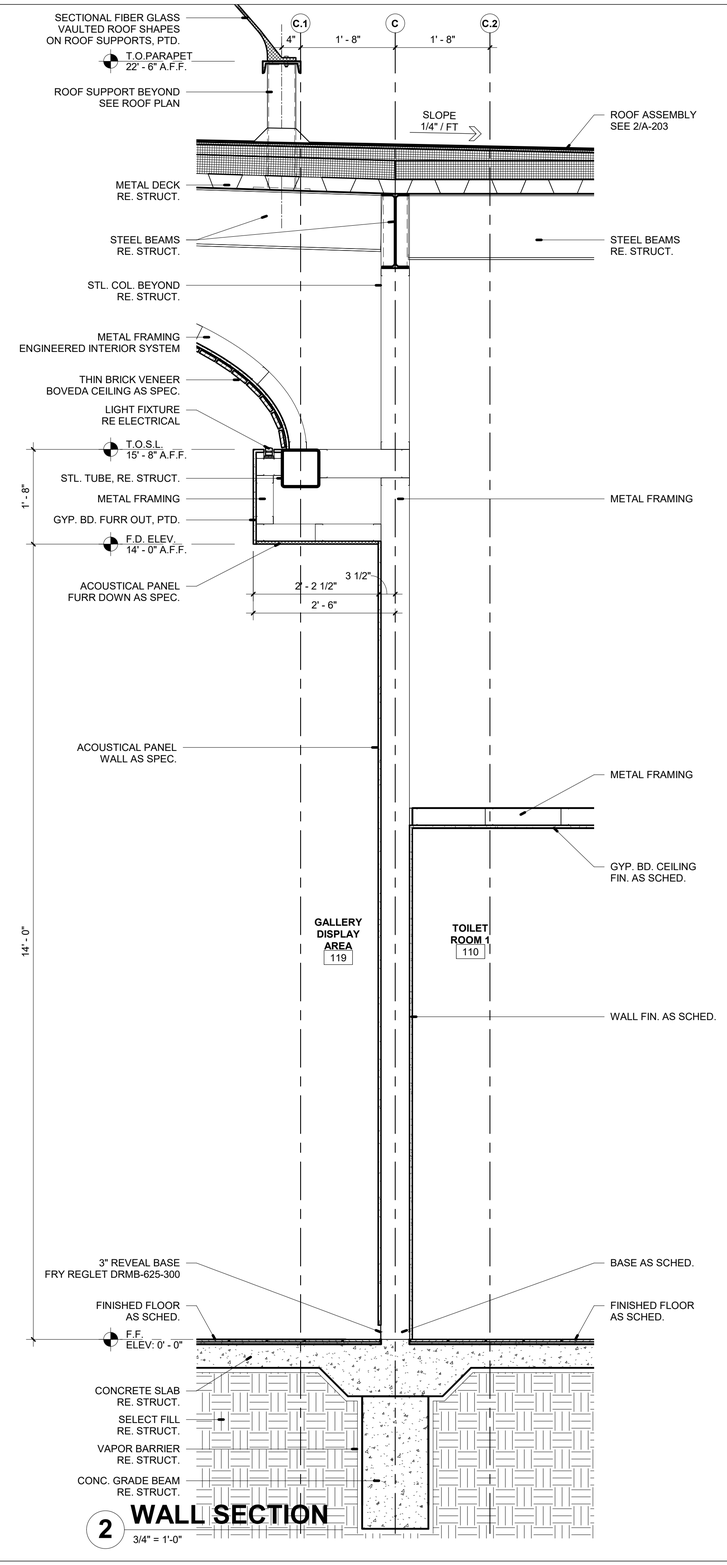

2 **WALL SECTION**
3/4" = 1'-0"

#	DESCRIPTION	DATE

ISSUE/REVISIONS

WALL SECTIONS

DUNAWAY
118 Broadway Suite 201, San Antonio, Texas 78205
Tel. 210.287.0348
(TX REG. F-1114)

muñoz
723 S. Flores • San Antonio, Texas 78204
210.349.1163 • www.munoz-co.com

WORLD HERITAGE CENTER
SAN ANTONIO, TEXAS

INTERIM REVIEW DOCUMENTS

THE SCHEMATIC DESIGN DOCUMENTS DEPICTED THEREIN ARE INCOMPLETE AND MAY NOT BE USED FOR REGULATORY APPROVAL, PERMIT OR CONSTRUCTION.

GEOF EDWARDS
TEXAS REGISTRATION #18803

12.01.2021

JOB NO.	A19021.00
DESIGNED BY:	-
DRAWN BY:	-
CHECKED BY:	-
DATE:	12/01/21
SHEET:	A-604

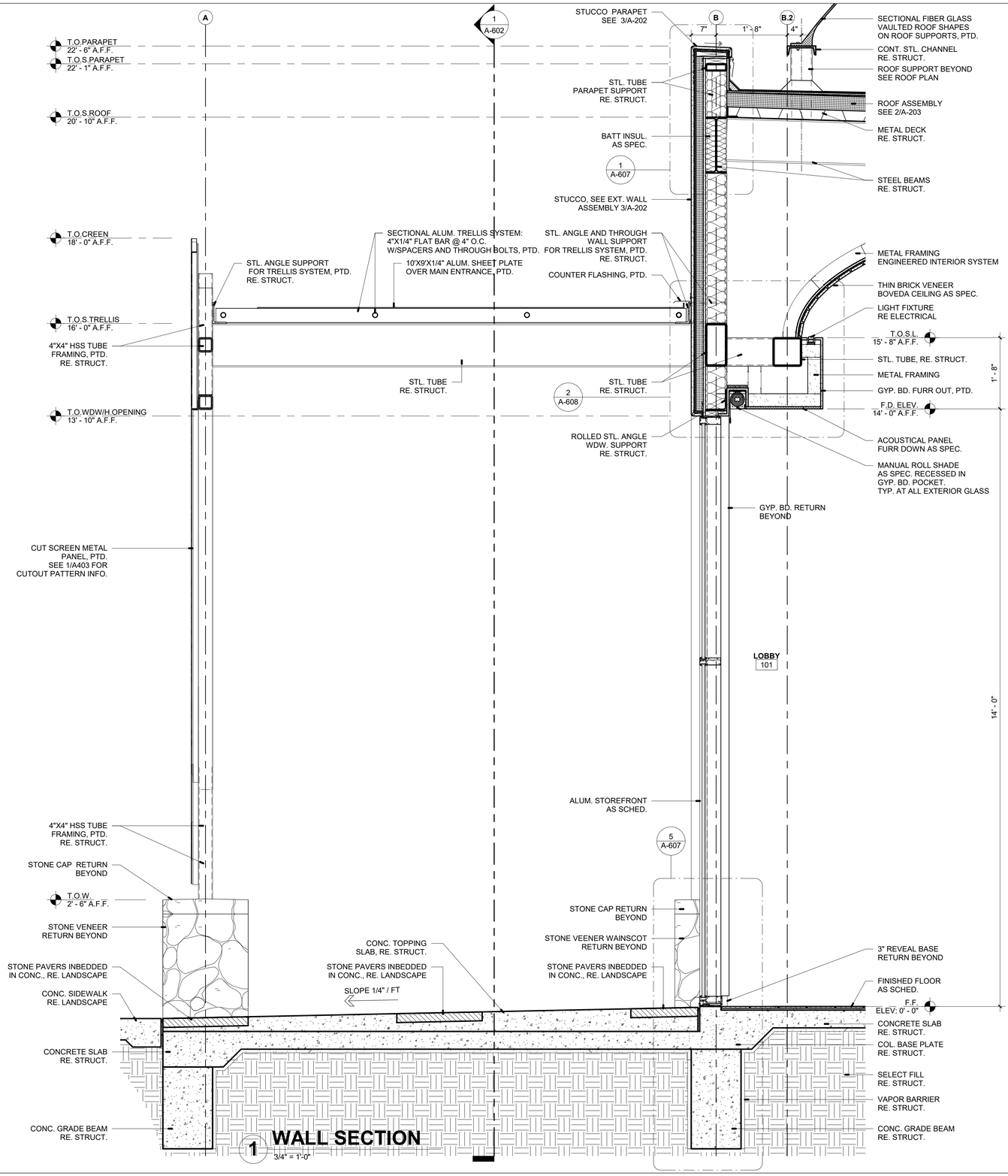

1 WALL SECTION
3/4" = 1'-0"

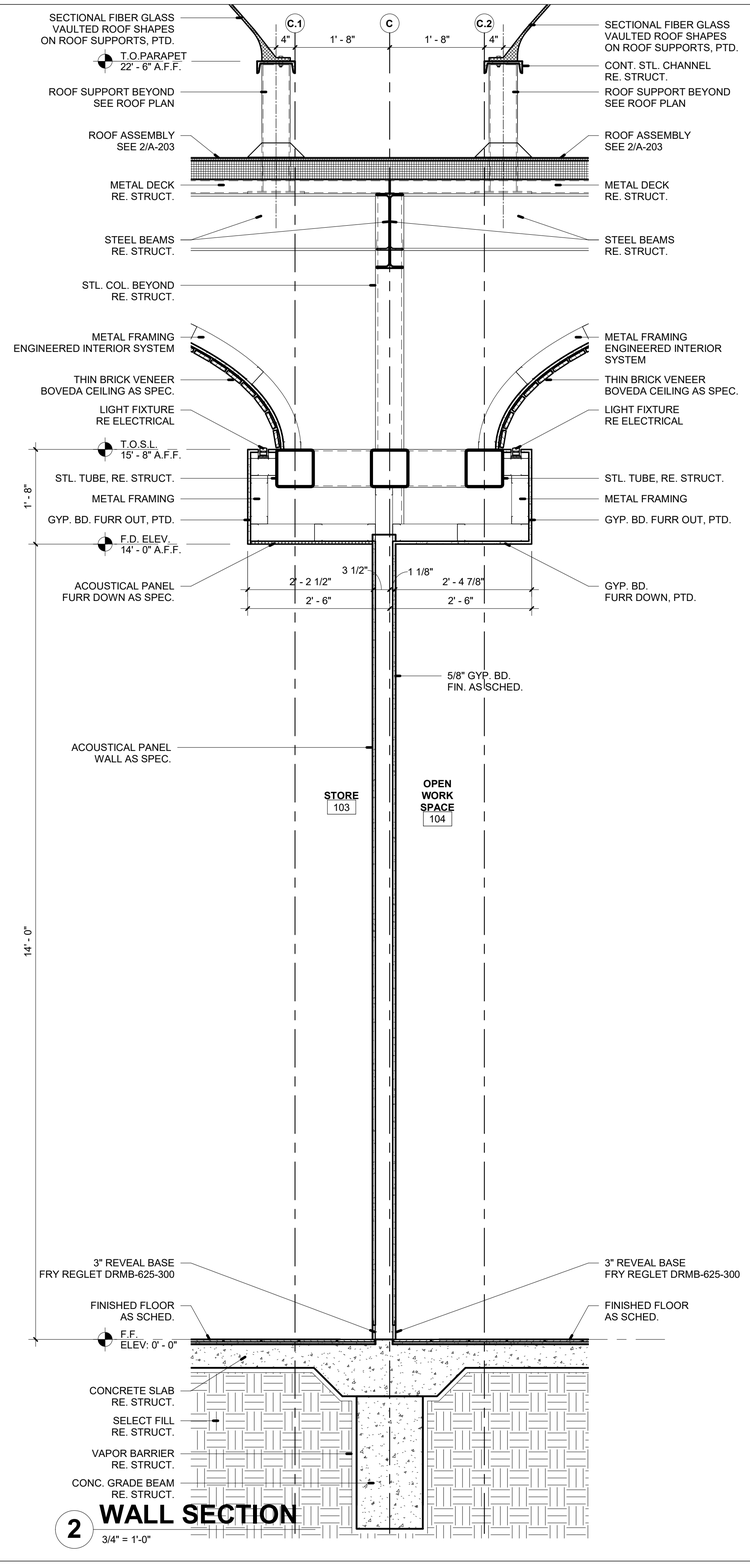

2 WALL SECTION
3/4" = 1'-0"

#	DESCRIPTION	DATE

ISSUE/REVISIONS

WALL SECTIONS

DUNAWAY
118 Broadway Suite-201, San Antonio, Texas 78205
Tel: 210.287.0348
Fax: 210.287.0349
(TX REG. F-1144)

muñoz
723 S. Flores • San Antonio, Texas 78204
210.349.1163 • www.munoz-co.com

WORLD HERITAGE CENTER
SAN ANTONIO, TEXAS

INTERIM REVIEW DOCUMENTS

THE SCHEMATIC DESIGN DOCUMENTS DEPICTED THEREIN ARE INCOMPLETE AND MAY NOT BE USED FOR REGULATORY APPROVAL, PERMIT OR CONSTRUCTION.

GEOF EDWARDS
TEXAS REGISTRATION #18803

12.01.2021

JOB NO.	A19021.00
DESIGNED BY:	Author
DRAWN BY:	Author
CHECKED BY:	Checker
DATE:	12/01/21
SHEET:	A-605

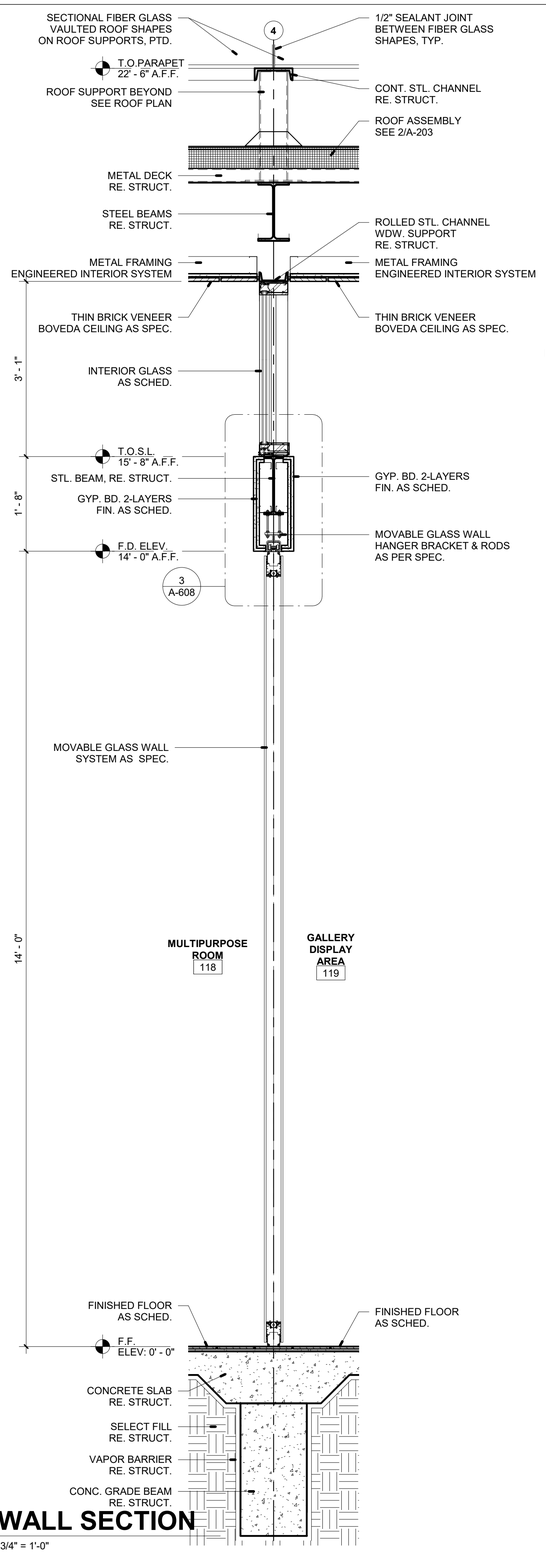

1 **WALL SECTION**
3/4" = 1'-0"

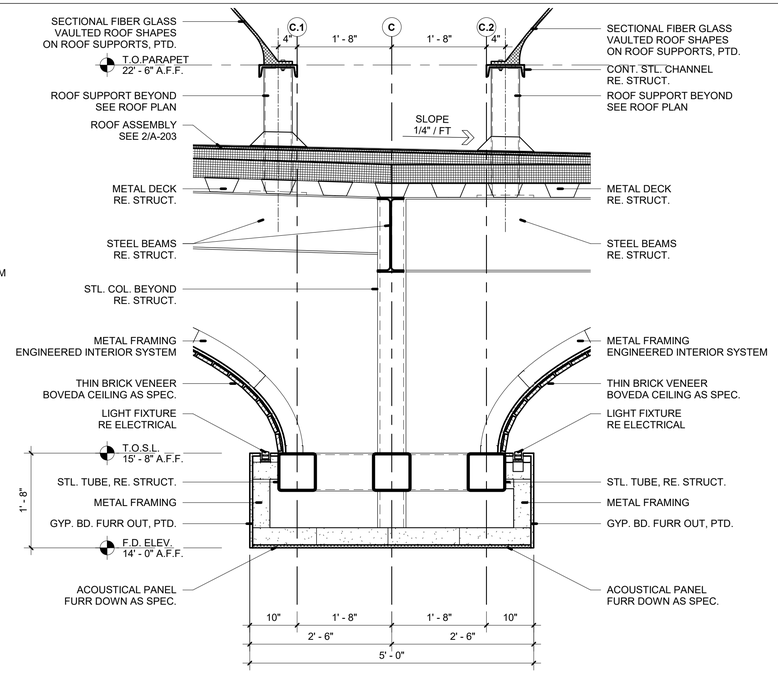

2 **WALL SECTION**
3/4" = 1'-0"

#	DESCRIPTION	DATE

ISSUE/REVISIONS

WALL SECTIONS

DUNAWAY
118 Broadway Suite-401, San Antonio, Texas 78205
Tel. 210.287.0348
(TX REG. F-1144)

muñoz
723 S. Flores • San Antonio, Texas 78204
210.349.1163 • www.munoz-co.com

WORLD HERITAGE CENTER
SAN ANTONIO, TEXAS

INTERIM REVIEW DOCUMENTS

THE SCHEMATIC DESIGN DOCUMENTS DEPICTED THEREIN ARE INCOMPLETE AND MAY NOT BE USED FOR REGULATORY APPROVAL, PERMIT OR CONSTRUCTION.

GEOF EDWARDS
TEXAS REGISTRATION #18803

12.01.2021

JOB NO.	A19021.00
DESIGNED BY:	Author
DRAWN BY:	Author
CHECKED BY:	Checker
DATE:	12/01/21
SHEET:	A-606

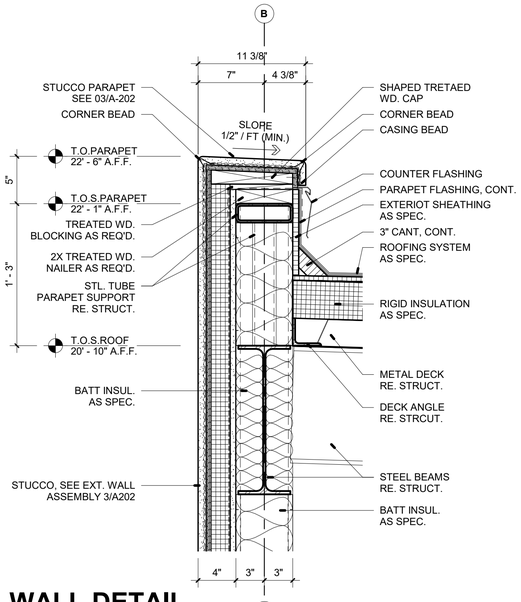

1 WALL DETAIL

1 1/2" = 1'-0"

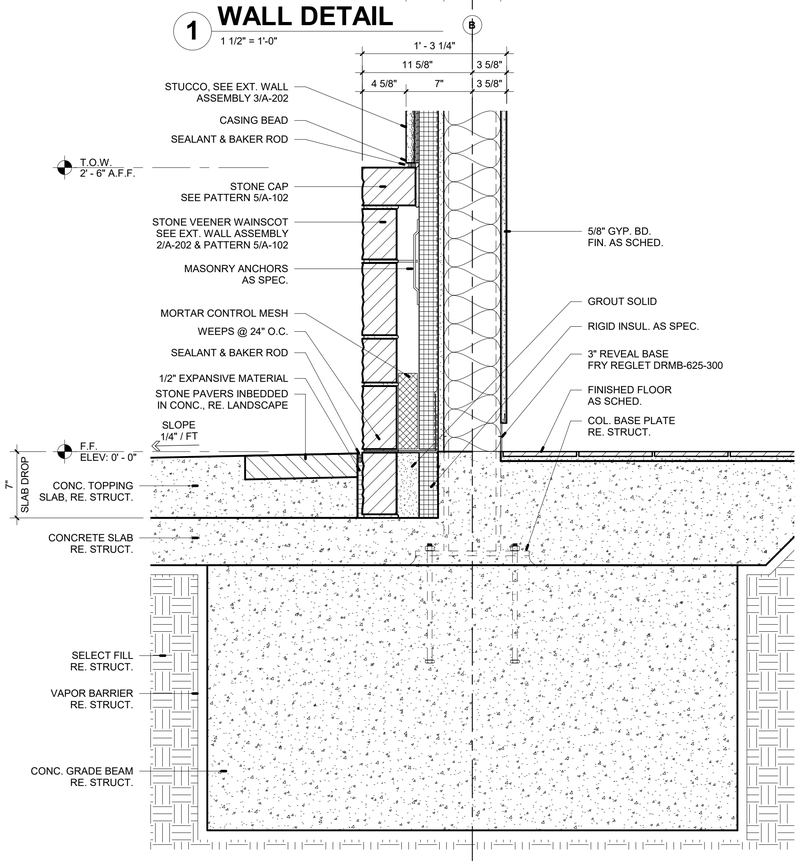

2 WALL DETAIL

1 1/2" = 1'-0"

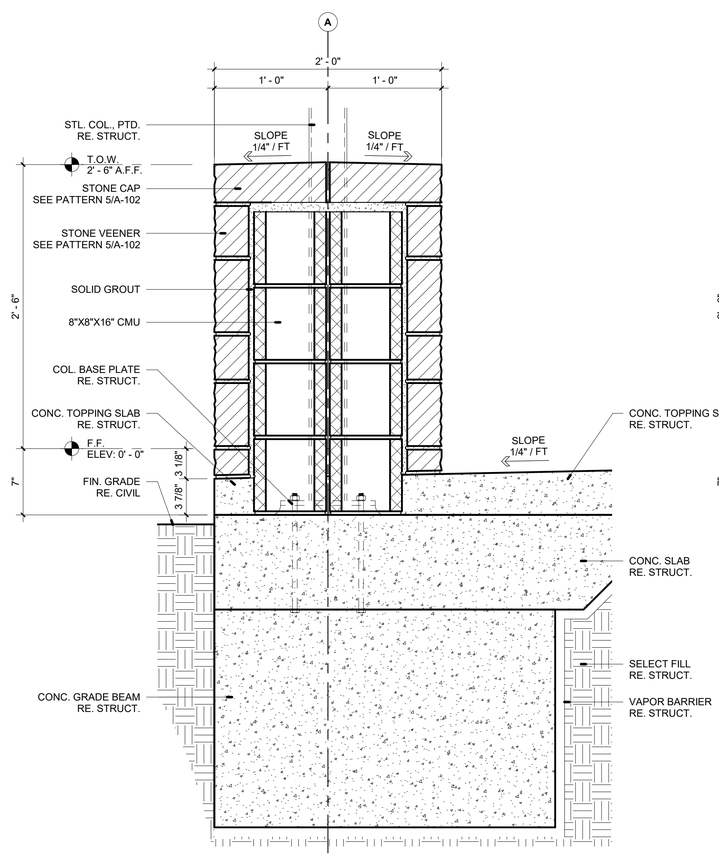

3 WALL DETAIL

1 1/2" = 1'-0"

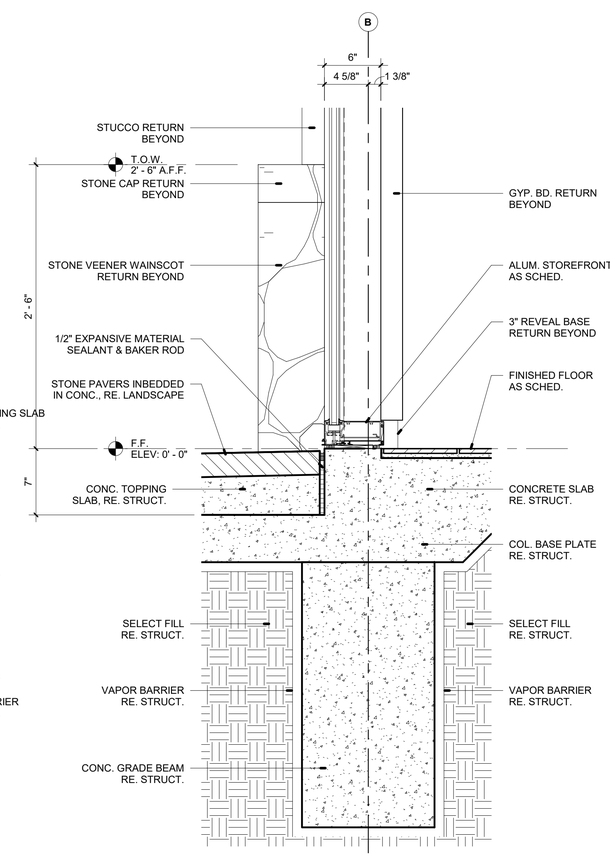

5 WALL DETAIL

1 1/2" = 1'-0"

ISSUE/REVISIONS

#	DESCRIPTION	DATE

WALL DETAILS

WORLD HERITAGE CENTER
SAN ANTONIO, TEXAS

DUNAWAY
118 Broadway Suite-401, San Antonio, Texas 78205
Tel. 210.287.0348
(TX REG. F-1141)

muñoz
723 S. Flores • San Antonio, Texas 78204
210.349.1163 • www.munoz-co.com

INTERIM REVIEW DOCUMENTS

THE SCHEMATIC DESIGN DOCUMENTS DEPICTED THEREIN ARE INCOMPLETE AND MAY NOT BE USED FOR REGULATORY APPROVAL, PERMIT OR CONSTRUCTION.

GEOF EDWARDS
TEXAS REGISTRATION #18803

12.01.2021

JOB NO.	A19021.00
DESIGNED BY:	Author
DRAWN BY:	Author
CHECKED BY:	Checker
DATE:	12/01/21
SHEET:	A-607

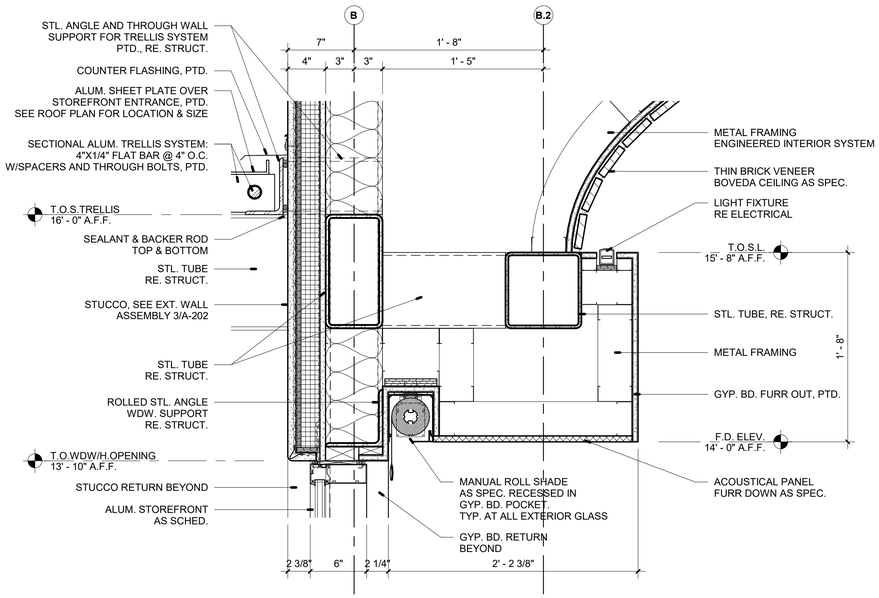

2 WALL DETAIL

1 1/2" = 1'-0"

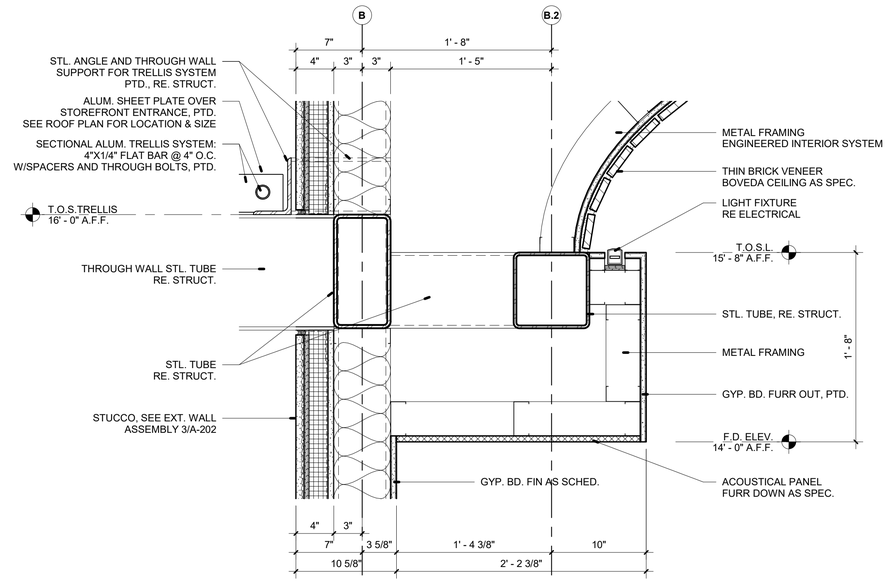

1 WALL DETAIL

1 1/2" = 1'-0"

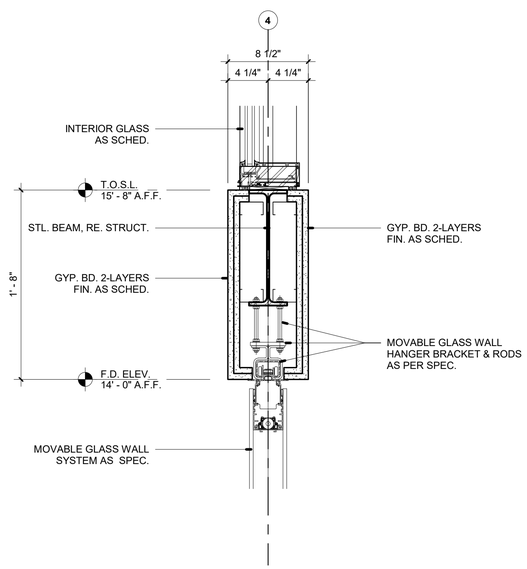

3 WALL DETAIL

1 1/2" = 1'-0"

ISSUE/REVISIONS

#	DESCRIPTION	DATE

WALL DETAILS

WORLD HERITAGE CENTER
SAN ANTONIO, TEXAS

DUNAWAY
118 Broadway Suite-201, San Antonio, Texas 78205
Tel. 210.287.0348
(TX REG. F-1144)

muñoz
723 S. Flores • San Antonio, Texas 78204
210.349.1163 • www.munoz-co.com

INTERIM REVIEW DOCUMENTS

THE SCHEMATIC DESIGN DOCUMENTS DEPICTED THEREIN ARE INCOMPLETE AND MAY NOT BE USED FOR REGULATORY APPROVAL, PERMIT OR CONSTRUCTION.

GEOF EDWARDS
TEXAS REGISTRATION #18803

12.01.2021

JOB NO.	**A19021.00**
DESIGNED BY:	**Author**
DRAWN BY:	**Author**
CHECKED BY:	**Checker**
DATE:	**12/01/21**
SHEET:	**A-608**

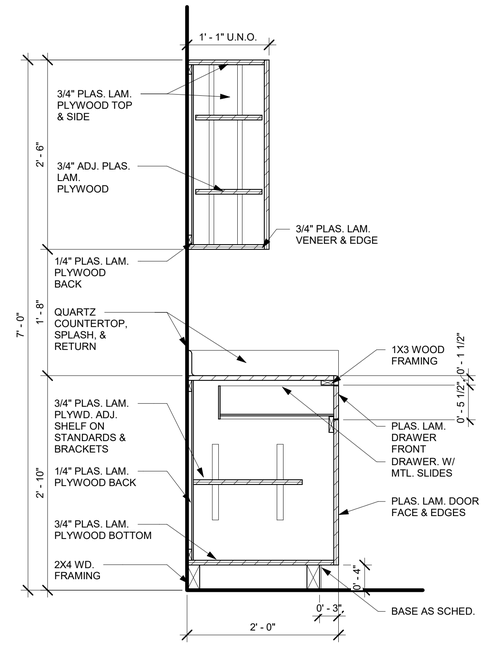

1 TYP. BASE & WALL CABINET

1" = 1'-0"

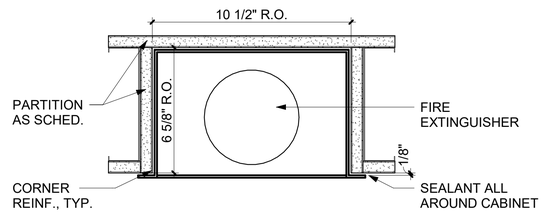

NOTES:
1. CABINET TO BE MOUNTED 5'-0" A.F.F. TO TOP OF CABINET
2. VERIFY CABINET ROUGH OPENING WITH CABINET MANUFACTURER

2 FULLY RECESSED FIRE EXTINGUISHER CABINET

3" = 1'-0"

ISSUE/REVISIONS

#	DESCRIPTION	DATE

MISC. DETAILS

WORLD HERITAGE CENTER
SAN ANTONIO, TEXAS

DUNAWAY
118 Broadway Suite-701, San Antonio, Texas 78205
Tel. 210.287.0348
(TX REG. F-1114)

muñoz
723 S. Flores • San Antonio, Texas 78204
210.349.1163 • www.munoz-co.com

INTERIM REVIEW DOCUMENTS

THE SCHEMATIC DESIGN DOCUMENTS DEPICTED THEREIN ARE INCOMPLETE AND MAY NOT BE USED FOR REGULATORY APPROVAL, PERMIT OR CONSTRUCTION.

GEOF EDWARDS
TEXAS REGISTRATION #18803

12.01.2021

JOB NO.	A19021.00
DESIGNED BY:	Author
DRAWN BY:	Author
CHECKED BY:	Checker
DATE:	12/01/21
SHEET:	A-701

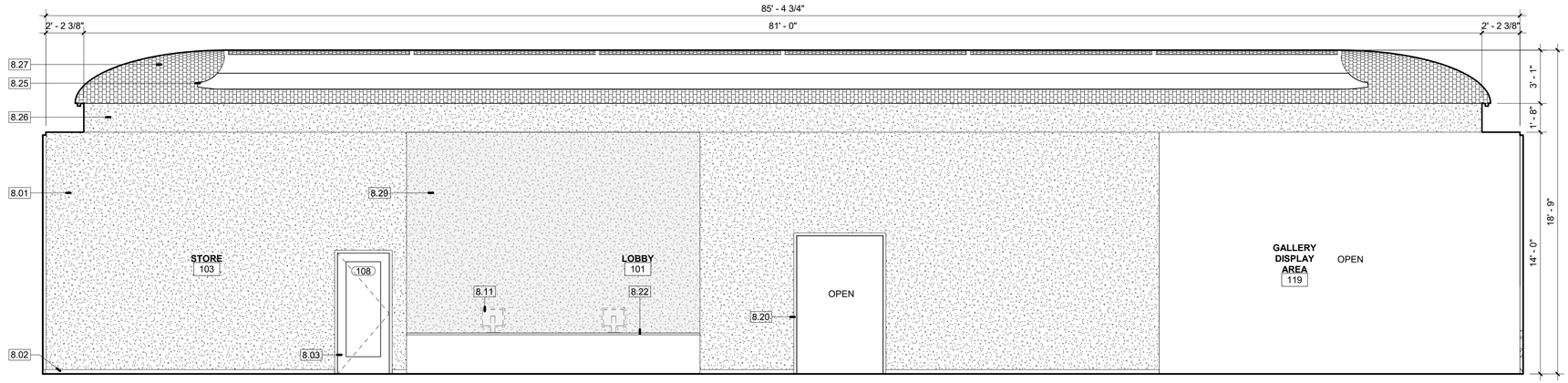

1 GALLERY W - EAST

1/4" = 1'-0"

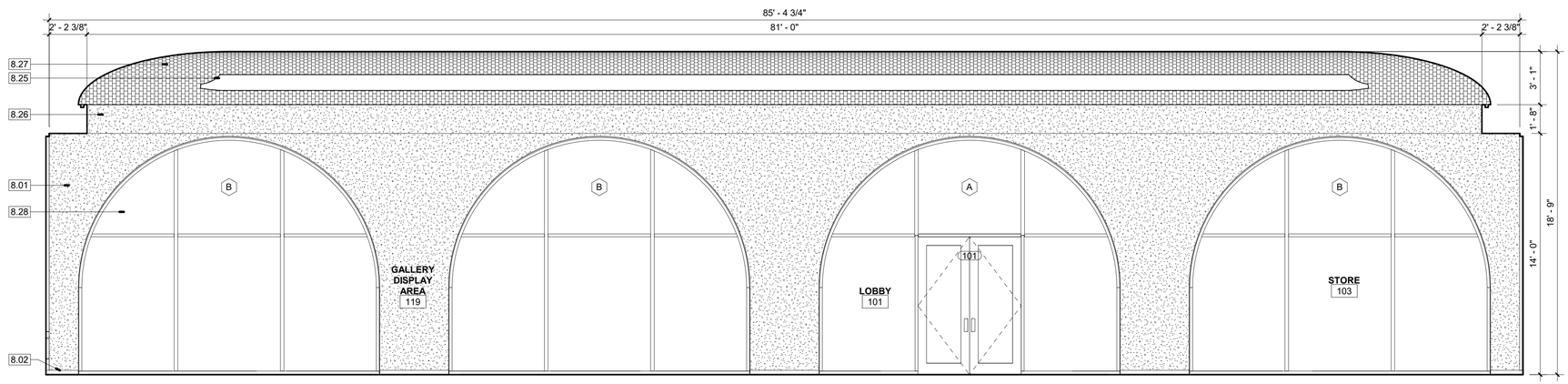

2 GALLERY W - WEST

1/4" = 1'-0"

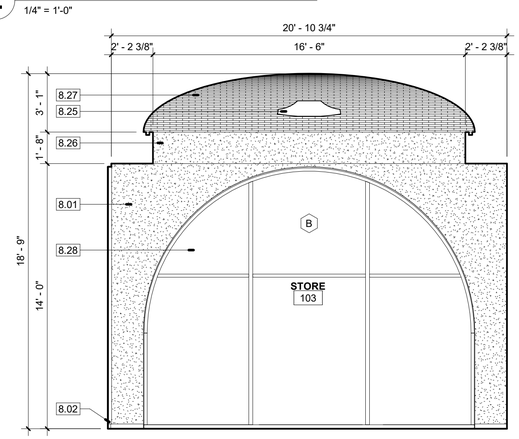

3 STORE - NORTH

1/4" = 1'-0"

KEYNOTE LEGEND

8.01	WALL FINISH AS SCHED.
8.02	BASE AS SCHED.
8.03	DOOR AS SCHED.
8.11	COMPUTER STATIONS N.I.C.
8.20	CASED OPENING, SEE 07/A-402
8.22	CUSTOM RECEPTION DESK, SOLID SURFACE TOP W/LED UNDERLIGHTING, 24" WOOD VENEER BASE CABINETS & DRAWERS W/TWO ADJUSTABLE SHELVES, ALL DOORS AND DRAWERS TO BE LOCKABLE
8.25	CUSTOM PENDANT LIGHT DIFUSER
8.26	GYP. BD. FURR OUT, PTD.
8.27	1" BRICK VENEER BOVEDA CEILING
8.28	WINDOW AS SCHED.
8.29	WALL PANELS AS SPEC.

ISSUE/REVISIONS

#	DESCRIPTION	DATE

DUNAWAY
118 Broadway Suite 201, San Antonio, Texas 78205
Tel: 210.287.0348
(TX REG. F-1144)

muñoz
723 S. Flores • San Antonio, Texas 78204
210.349.1163 • www.munoz-co.com

INTERIOR ELEVATIONS

WORLD HERITAGE CENTER
SAN ANTONIO, TEXAS

INTERIM REVIEW DOCUMENTS

THE SCHEMATIC DESIGN DOCUMENTS DEPICTED THEREIN ARE INCOMPLETE AND MAY NOT BE USED FOR REGULATORY APPROVAL, PERMIT OR CONSTRUCTION.

GEOF EDWARDS
TEXAS REGISTRATION #18803

12.01.2021

JOB NO.	A19021.00
DESIGNED BY:	Author
DRAWN BY:	Author
CHECKED BY:	Checker
DATE:	12/01/21
SHEET:	A-801

KEYNOTE LEGEND

8.01	WALL FINISH AS SCHED.
8.02	BASE AS SCHED.
8.03	DOOR AS SCHED.
8.05	INTERIOR FIXED GLASS AS SCHED.
8.07	GYP. BD. FURR DOWN WITH ACOUSTICAL TREATMENT AS SPEC., PTD.
8.16	FOLDABLE GLASS WALL AS SPEC.
8.20	CASED OPENING, SEE 07/A-402
8.24	LIGHT FIXTURE, RE. ELECTRICAL
8.25	CUSTOM PENDANT LIGHT DIFUSER
8.26	GYP. BD. FURR OUT, PTD.
8.27	1" BRICK VENEER BOVEDA CEILING
8.28	WINDOW AS SCHED.

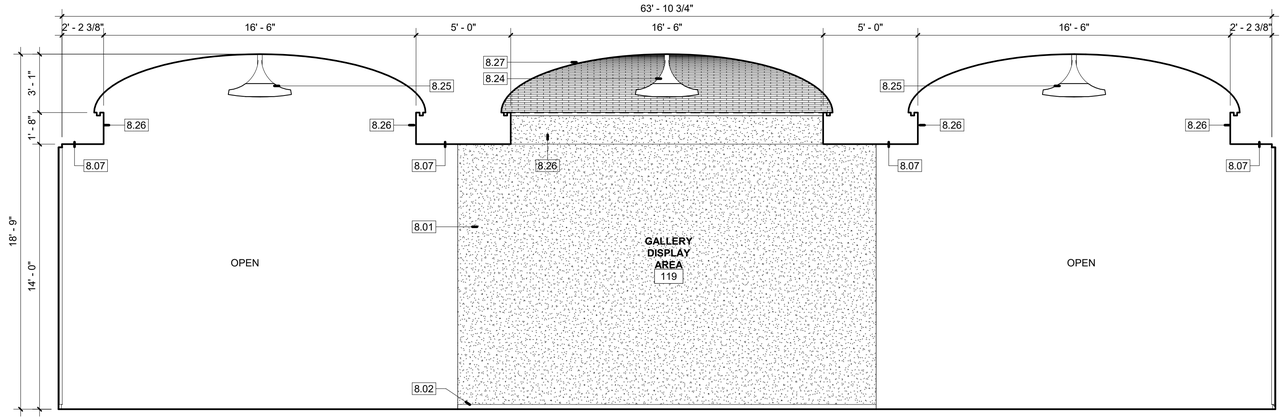

1 GALLERY S - NORTH

1/4" = 1'-0"

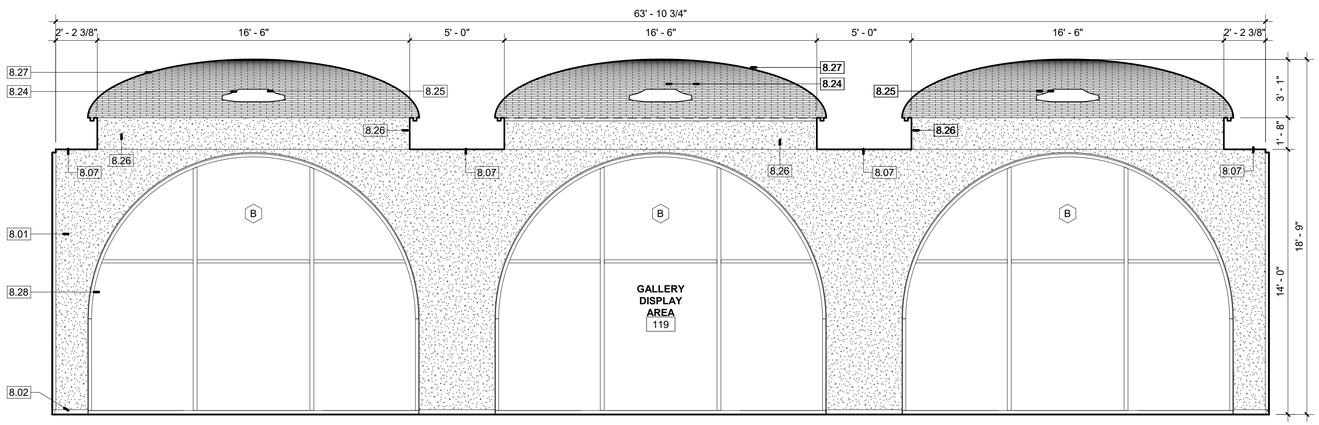

2 GALLERY S - SOUTH

1/4" = 1'-0"

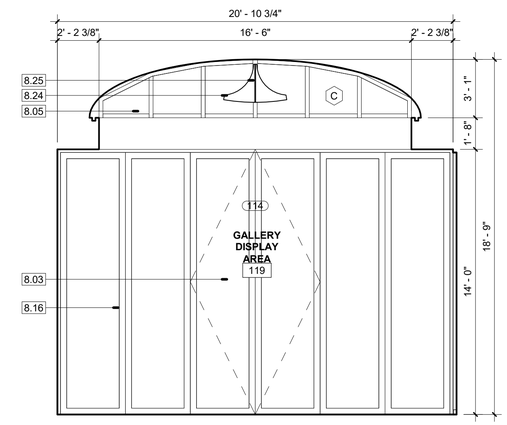

3 GALLERY E - NORTH

1/4" = 1'-0"

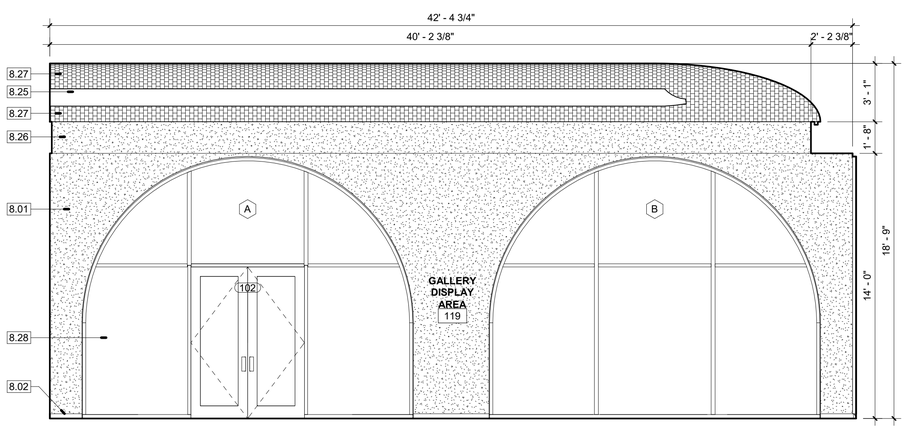

4 GALLERY E - EAST

1/4" = 1'-0"

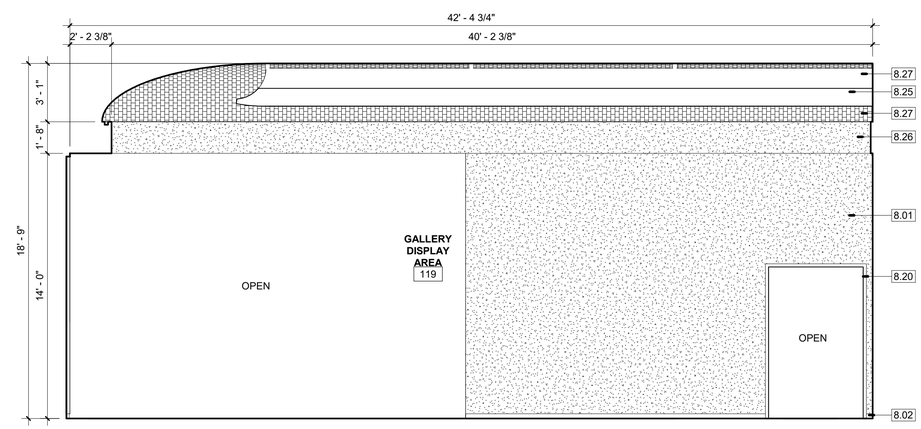

5 GALLERY E - WEST

1/4" = 1'-0"

ISSUE/REVISIONS		
#	DESCRIPTION	DATE

INTERIOR ELEVATIONS

WORLD HERITAGE CENTER
SAN ANTONIO, TEXAS

DUNAWAY
118 Broadway Suite-201, San Antonio, Texas 78205
Tel: 210.287.0348
(TX REG. F-1144)

muñoz
723 S. Flores • San Antonio, Texas 78204
210.349.1163 • www.munoz-co.com

INTERIM REVIEW DOCUMENTS

THE SCHEMATIC DESIGN DOCUMENTS DEPICTED THEREIN ARE INCOMPLETE AND MAY NOT BE USED FOR REGULATORY APPROVAL, PERMIT OR CONSTRUCTION.

GEOF EDWARDS
TEXAS REGISTRATION #18803

12.01.2021

JOB NO.	A19021.00
DESIGNED BY:	Author
DRAWN BY:	Author
CHECKED BY:	Checker
DATE:	12/01/21
SHEET:	A-802

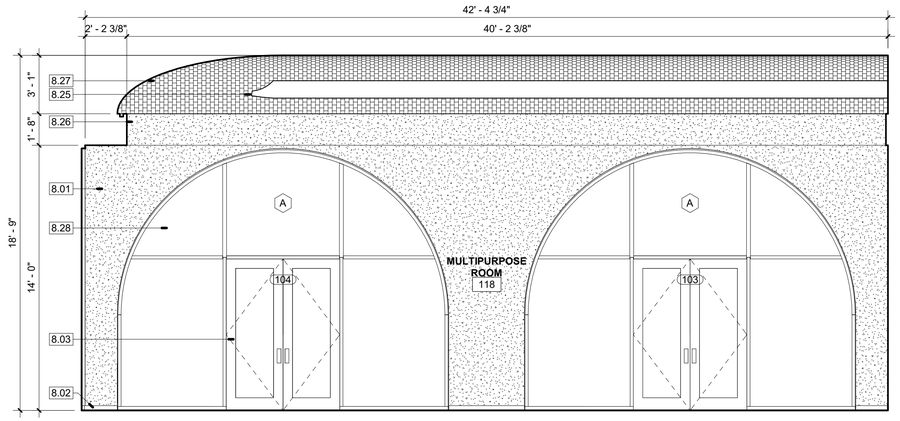

1 MULTIPURPOSE - EAST

1/4" = 1'-0"

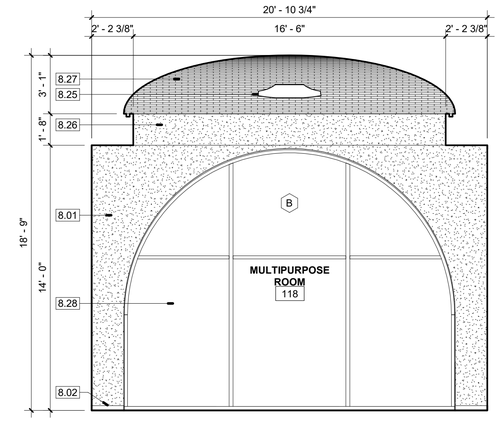

2 MULTIPURPOSE - NORTH

1/4" = 1'-0"

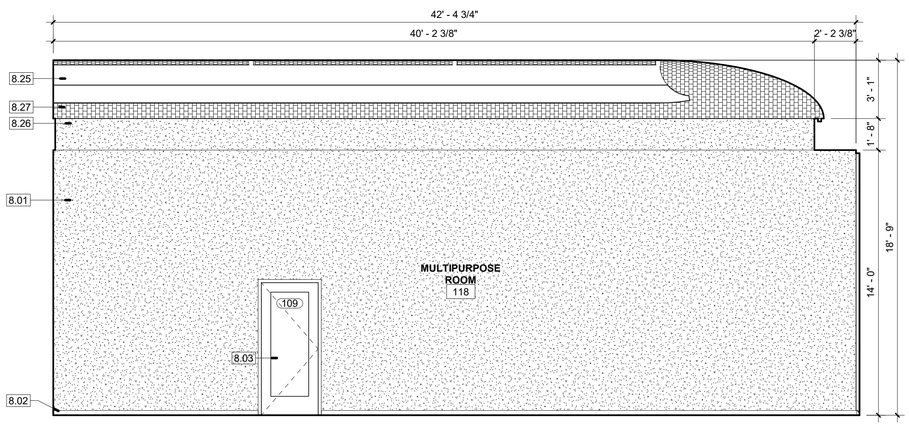

3 MULTIPURPOSE - WEST

1/4" = 1'-0"

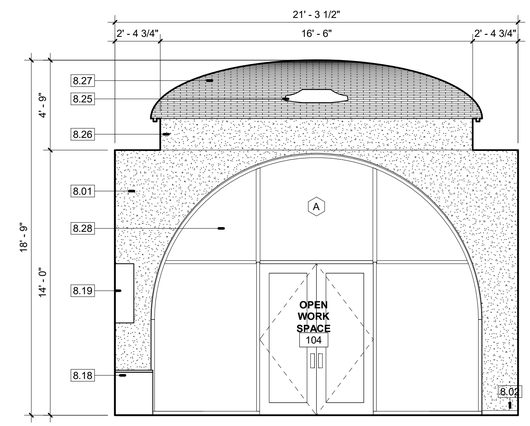

4 OPEN WORK SPACE - NORTH

1/4" = 1'-0"

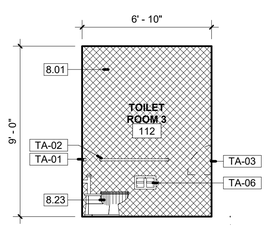

5 TOILET ROOM - EAST

1/4" = 1'-0"

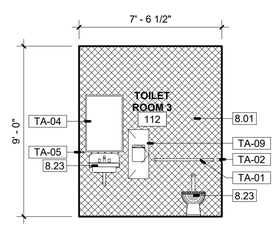

6 TOILET ROOM - NORTH

1/4" = 1'-0"

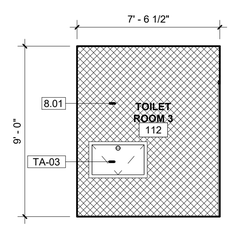

7 TOILET ROOM - SOUTH

1/4" = 1'-0"

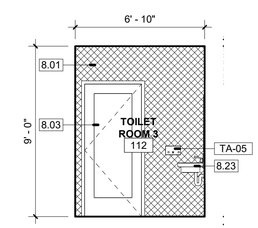

8 TOILET ROOM - WEST

1/4" = 1'-0"

KEYNOTE LEGEND

8.01	WALL FINISH AS SCHED.
8.02	BASE AS SCHED.
8.03	DOOR AS SCHED.
8.18	24" WOOD VENEER BASE CABINETS & DRAWERS W/ONE ADJUSTABLE SHELF & SOLID SURFACE COUNTERTOP
8.19	12" WOOD VENEER UPPER CABINETS W/TWO ADJUSTABLE SHELVES
8.23	PLUMBING FIXTURE, RE. PLUMBING
8.25	CUSTOM PENDANT LIGHT DIFUSER
8.26	GYP. BD. FURR OUT, PTD.
8.27	1" BRICK VENEER BOVEDA CEILING
8.28	WINDOW AS SCHED.
TA-01	GRAB BAR AS SCHED.
TA-02	GRAB BAR AS SCHED.
TA-03	BABY CHANGING STATION AS SCHED.
TA-04	MIRROR AS SCHED.
TA-05	SOAP DISPENSER AS SCHED.
TA-06	TISSUE DISPENSER AS SCHED.
TA-09	TOWEL DISPENSER/WASTE RECEPTICAL AS SCHED.

ISSUE/REVISIONS

#	DESCRIPTION	DATE

INTERIOR ELEVATIONS

WORLD HERITAGE CENTER
SAN ANTONIO, TEXAS

DUNAWAY
118 Broadway Suite 201, San Antonio, Texas 78205
Tel: 210.287.0348
(TX REG. F-1114)

muñoz
723 S. Flores • San Antonio, Texas 78204
210.349.1163 • www.munoz-co.com

INTERIM REVIEW DOCUMENTS

THE SCHEMATIC DESIGN DOCUMENTS DEPICTED THEREIN ARE INCOMPLETE AND MAY NOT BE USED FOR REGULATORY APPROVAL, PERMIT OR CONSTRUCTION.

GEOF EDWARDS
TEXAS REGISTRATION #18803

12.01.2021

JOB NO.	A19021.00
DESIGNED BY:	Author
DRAWN BY:	Author
CHECKED BY:	Checker
DATE:	12/01/21
SHEET:	A-803

GENERAL NOTES

1. THE STRUCTURAL DRAWINGS DEPICT THE STRUCTURE IN ITS FINAL CONSTRUCTED CONFIGURATION. NEITHER CONSTRUCTION MEANS AND METHODS NOR CONSTRUCTION SAFETY ARE PART OF THE STRUCTURAL ENGINEER'S EXPERTISE OR SCOPE OF WORK. THE GENERAL CONTRACTOR AND SUBCONTRACTORS ARE FULLY RESPONSIBLE FOR THE MEANS AND METHODS USED TO CONSTRUCT THE STRUCTURE AND FOR FULL COMPLIANCE WITH ALL JOB SAFETY RELATED REGULATIONS AND CONDITIONS AT THE SITE. LIMITED SITE VISITS, IF ANY, BY THE STRUCTURAL ENGINEER ARE SOLELY TO OBSERVE COMPLETED PARTS OF THE STRUCTURE. THE STRUCTURAL ENGINEER IS NEITHER QUALIFIED TO OBSERVE NOR COMMENT ON CONSTRUCTION MEANS AND METHODS AND JOB SITE SAFETY. ADDITIONAL SHORING NOT INDICATED ON THE CONTRACT DOCUMENTS IS THE SOLE RESPONSIBILITY OF THE GENERAL CONTRACTOR.

2. THE GENERAL CONTRACTOR SHALL INCLUDE A STRUCTURAL CONTINGENCY IN THEIR BID TO THE OWNER. THIS CONTINGENCY SHALL EQUAL 5% OF THE INSTALLED COST OF THE CORE AND SHELL STRUCTURE. ANY REMAINING CONTINGENCY SHALL BE REFUNDED TO THE OWNER UPON PROJECT COMPLETION. UNIT COST INCREASES RELATED TO DEEP FOUNDATION SYSTEMS SHALL BE A SEPARATE COST ITEM AS SPECIFIED IN FOUNDATION NOTES.

3. PRINCIPAL OPENINGS ARE SHOWN ON THE DRAWINGS. SEE ARCHITECTURAL, MECHANICAL, PLUMBING, AND ELECTRICAL DRAWINGS FOR OPENINGS, SLEEVES, CURBS, INSERTS, DEPRESSIONS, ETC., NOT SHOWN.

4. MECHANICAL ROOFTOP UNIT WEIGHTS SHOWN ON FRAMING PLANS INCLUDE CURB WEIGHTS PROVIDED BY THE MECHANICAL ENGINEER. DUNAWAY SHALL BE NOTIFIED IF FINAL ROOFTOP UNIT WEIGHTS, INCLUDING CURB WEIGHTS, ARE GREATER THAN THE WEIGHTS SHOWN ON FRAMING PLANS.

5. ALL DETAILS ARE TYPICAL UNLESS NOTED OTHERWISE. DETAILS SHALL APPLY TO ALL SIMILAR AND LIKE CONDITIONS.

6. THE GENERAL CONTRACTOR SHALL SUBMIT ELECTRONIC SHOP DRAWINGS TO THE ENGINEER FOR REVIEW OF THE FOLLOWING ITEMS. SEE SPECIFICATIONS WHERE APPLICABLE FOR FURTHER REQUIREMENTS:

   CONCRETE MIX DESIGNS FOR EACH CLASS OF CONCRETE INCLUDING TEST DATA
   CONCRETE REINFORCING
   ANCHOR BOLT AND EMBEDDED ITEMS (PLATES, ANGLES, BOLTS, ETC.)
   STRUCTURAL STEEL AND ERECTION DRAWINGS
   MISCELLANEOUS STEEL
   ROOF METAL DECK

7. THE GENERAL CONTRACTOR SHALL SUBMIT ELECTRONIC SHOP DRAWINGS AND CALCULATIONS SEALED BY A LICENSED ENGINEER TO THE ENGINEER OF RECORD AND LOCAL JURISDICTION FOR REVIEW OF THE FOLLOWING DEFERRED SUBMITTALS:

   ALUMINUM TRELLIS
   STEEL CONNECTIONS
   LIGHT GAUGE COLD-FORMED METAL STUDS, ERECTION DRAWINGS WITH CALCULATIONS, INCLUDING DESIGN CRITERIA, MEMBER SIZES, AND CONNECTIONS
   EXTERIOR WINDOW WALL SYSTEM

8. THE OMISSION FROM THE SHOP DRAWINGS OF ANY MATERIALS REQUIRED BY THE CONTRACT DOCUMENTS TO BE FURNISHED SHALL NOT RELIEVE THE CONTRACTOR OF THE RESPONSIBILITY OF FURNISHING AND INSTALLING SUCH MATERIALS, REGARDLESS OF WHETHER THE SHOP DRAWINGS HAVE BEEN REVIEWED AND APPROVED.

9. ALL SHOP DRAWINGS MUST BE REVIEWED AND APPROVED BY THE GENERAL CONTRACTOR PRIOR TO THE SUBMITTAL TO THE ENGINEER. THE USE OF ELECTRONIC FILES OR REPRODUCTIONS OF THESE CONTRACT DOCUMENTS BY ANY CONTRACTOR, SUBCONTRACTOR, ERECTOR, FABRICATOR, OR MATERIAL SUPPLIER IN LIEU OF PREPARATION OF SHOP DRAWINGS SIGNIFIES THEIR ACCEPTANCE OF ALL INFORMATION SHOWN HEREON AS CORRECT, AND OBLIGATES THEMSELVES TO ANY JOB EXPENSE, REAL OR IMPLIED, ARISING DUE TO ANY ERRORS OR OMISSIONS THAT MAY OCCUR HEREON.

10. GRADE SUPPORTED SLAB:

    THE CONTRACTOR IS CAUTIONED AGAINST LOADING THE SLAB ON GRADE WITH CRANES, CONCRETE TRUCKS AND ALL OTHER HEAVILY LOADED VEHICLES DURING CONSTRUCTION. THE SLAB HAS NOT BEEN DESIGNED FOR CRANE LOADS AND MAY REQUIRE AN INCREASE IN THE SLAB THICKNESS AND/OR REINFORCEMENT. IF A HEAVY VEHICLE IS TO BE UTILIZED ON THE SLAB, THE CONTRACTOR IS REQUIRED TO SUBMIT CALCULATIONS SIGNED AND SEALED BY A LICENSED ENGINEER IN THE STATE WHERE THE PROJECT IS LOCATED VERIFYING THE ADEQUACY OF THE SLAB AND SUBGRADE.

    THE GROUND FLOOR SLAB IS A GRADE SUPPORTED SLAB FOLLOWING THE DESIGN RECOMMENDATIONS SHOWN IN THE GEOTECHNICAL REPORT FOR A PVR OF 1 INCH. IT IS NOT STRUCTURALLY ISOLATED FROM THE SUBGRADE AND HAS NOT BEEN DESIGNED TO RESIST ANY EXTERNAL UPWARD OR DOWNWARD LOADS. IT IS INTENDED TO BE ENTIRELY SUPPORTED BY THE PREPARED SUBGRADE BELOW THE SLAB.

BUILDING CODE	
BUILDING CODE	INTERNATIONAL BUILDING CODE 2018
RISK CATEGORY	II

LIVE LOADS	
NONE	N/A PSF
PARTITIONS	15 PSF
FIRST FLOOR	100 PSF
STAIRS AND EXITS	100 PSF + 300 LB CONCENTRATED LOAD AT TREAD MIDSPAN
ROOF LIVE LOAD	20 PSF
MECHANICAL ZONE	50 PSF

SNOW LOADS	
GROUND SNOW LOAD	5 PSF
FLAT ROOF SNOW LOAD	9.2 PSF
SNOW EXPOSURE FACTOR, Ce	1.2
SNOW LOAD IMPORTANCE FACTOR, Is	1
THERMAL FACTOR	1

RAIN INTENSITY	
RAIN INTENSITY	4.25 IN/HR

SPREAD FOOTING DESIGN CRITERIA	
BEARING CAPACITY	2000 PSF
BEARING ELEVATION	-3' - 0"
SOIL REQUIREMENTS	[8] FEET OF SELECT FILL

WIND LOAD CRITERIA	
ULTIMATE WIND SPEED	108 MPH
NOMINAL WIND SPEED	83.7 MPH
IMPORTANCE FACTOR, Iw	1
EXPOSURE CATEGORY	B
ENCLOSURE CLASSIFICATION	ENCLOSED BUILDING
INTERNAL PRESSURE COEFFICIENT, Gcpi	+/- 0.18
MEAN ROOF HEIGHT	21.5 FT

COMPONENTS AND CLADDING PARAPET PRESSURES (PSF)*

AREA	EFFECTIVE WIND AREA (SQ. FT.)				
	10	20	50	100	500
CASE A, ZONE 2	59	55	50	47	38
CASE A, ZONE 3	59	55	50	47	38
CASE B, INTERIOR ZONE	-38	-36	-33	-32	-27
CASE B, CORNER ZONE	-43	-40	-37	-34	-27

COMPONENTS AND CLADDING ROOF PRESSURES (PSF)*

AREA	EFFECTIVE WIND AREA (SQ. FT.)				
	10	20	50	100	500
NEGATIVE ZONE 1	-34	-32	-29	-27	-21
NEGATIVE ZONE 1'	-20	-20	-20	-20	-16
NEGATIVE ZONE 2	-45	-42	-38	-35	-29
NEGATIVE ZONE 3	-45	-42	-38	-35	-29
POSITIVE ZONE 1 & 1'	16	16	16	16	16
POSITIVE ZONES 2 & 3	21	20	19	18	16
OVERHANG ZONE 1&1'	-31	-30	-29	-29	-18
OVERHANG ZONE 2	-41	-38	-33	-29	-20
OVERHANG ZONE 3	-41	-38	-33	-29	-20

COMPONENTS AND CLADDING WALL PRESSURES (PSF)*

AREA	EFFECTIVE WIND AREA (SQ. FT.)				
	10	20	50	100	500
NEGATIVE ZONE 4	-23	-22	-21	-20	-18
NEGATIVE ZONE 5	-29	-27	-24	-22	-18
POSITIVE ZONE 4 & 5	21	21	19	18	16

*WIND LOADS SHOWN ARE ULTIMATE LOADS WITHOUT LOAD FACTORS FROM RELEVANT IBC LOAD COMBINATIONS. A DEAD LOAD OF 5 PSF MAY BE USED IN THE CALCULATION OF NET UPLIFT FOR THE JOISTS AND DECK.

LINEAR INTERPORLATION IS ALLOWED FOR EFFECTIVE AREAS BETWEEN THOSE PROVIDED.

SEISMIC LOAD CRITERIA	
IMPORTANCE FACTOR, Ie	1
0.2 SEC SPECTRAL ACCELERATION, Ss	0.051
1.0 SEC SPECTRAL ACCELERATION, S1	0.022
SPECTRAL RESPONSE COEFFICIENT, Sds	0.05
SPECTRAL RESPONSE COEFFICIENT, Sd1	0.04
SITE CLASS CATEGORY	D
SEISMIC DESIGN CATEGORY	A
SEISMIC FORCE RESISTING SYSTEM	STEEL ORDINARY CONCENTRICALLY BRACED FRAMES
DESIGN BASE SHEAR, V	5 K
SEISMIC RESPONSE COEFFICIENT, Cs	0.01
RESPONSE MODIFICATION FACTOR, R	3.25
ANALYSIS PROCEDURE	EQUIVALENT LATERAL FORCE PROCEDURE

ARCHITECTURAL BARRIER ACT	
GRAB BAR	250 LBS IN ANY DIRECTION
TUB OR SHOWER SEAT	250 LBS IN ANY DIRECTION
FASTENERS AND MOUNTING DEVICES	250 LBS IN ANY DIRECTION
HANDRAILS AND GUARDRAILS	200 LBS OR 50 PLF IN ANY DIRECTION
VEHICLE BARRIER LOAD	6000 LB CONCENTRATED LOAD APPLIED HORIZONTALLY AND LOCATED AT ANY ELEVATION BETWEEN 1'-6" AND 2'-3" ABOVE FINISHED FLOOR. THE LOAD SHALL BE APPLIED ON AN AREA NOT TO EEXCEED 12"x12" AND LOCATED SO AS TO PRODUCE THE MAXIMUM LOAD EFFECTS

PIPE LOADS WITH WATER

PIPE DIAMETER (IN)	WEIGHT (PLF)	MAX SPACING OF HANGERS (FT)
4	16	10
6	32	10
8	50	5
10	75	5
12	100	5

SITE DRAINAGE

1. GRADE THE SITE TO PROVIDE POSITIVE DRAINAGE AWAY FROM ALL BUILDINGS AND SLABS. WATER SHALL NOT BE ALLOWED TO POND ADJACENT TO THE BUILDING FOUNDATIONS OR SLABS.

2. DOWNSPOUTS FROM ROOF DRAINS AND GUTTERS SHALL BE COLLECTED AND PIPED AWAY FROM THE BUILDING. WHEN WATER IS NOT PIPED AWAY FROM THE BUILDING, DOWNSPOUTS SHALL DUMP ONTO A CAST IN PLACE 4" THICK X 3'-0" WIDE CONCRETE SWALE REINFORCED WITH #4 AT 12" ON CENTER EACH WAY AND EXTENDING 10'-0" OUT FROM THE BUILDING.

3. TREES AND VEGETATION SHALL NOT BE ALLOWED WITHIN A DISTANCE EQUAL TO THREE QUARTERS THEIR ULTIMATE HEIGHT AWAY FROM THE BUILDING.

4. IRRIGATE VEGETATION AND SOILS ADJACENT TO BUILDING (NO MORE THAN 15 MINUTES THREE TIMES A WEEK) ON AN AS NEEDED BASIS TO MAINTAIN UNIFORM SOIL MOISTURE CONDITIONS AROUND THE PERIMETER OF THE BUILDING FOLLOWING CONSTRUCTION.

EARTHWORK AND FOUNDATIONS

1. FOUNDATION DETAILING SHOWN ON THE DRAWINGS IS BASED ON A FOUNDATION DESIGN SPECIFIED IN THE SOIL REPORT BY ARIAS GEOPROFESSIONALS, INC., REPORT NO. 2019-823, DATED NOVEMBER 04, 2020 ALONG WITH SUPPLEMENT 1, DATED MAY 28, 2021. THE RECOMMENDATIONS CONTAINED IN THE GEOTECHNICAL REPORT SHALL NOT SUPERSEDE THE REQUIREMENTS SHOWN IN THE CONTRACT DOCUMENTS OR IN THE SPECIFICATIONS WHEN THE REQUIREMENTS SHOWN ON THE CONTRACT DOCUMENTS ARE MORE STRINGENT THAN THOSE SHOWN IN THE GEOTECHNICAL REPORT. THE CONTRACTOR IS REQUIRED TO SECURE A COPY OF THE GEOTECHNICAL REPORT FROM THE OWNER AND TO HAVE A COPY ON THE JOB SITE AT ALL TIMES FOR THEIR USE AND REFERENCE.

2. SITE PREPARATION FOR THE BUILDING PAD SHALL CONSIST OF THE REMOVAL OF EXISTING PAVEMENT, VEGETATION, ORGANIC MATTER AND ANY ADDITIONAL MATERIAL AS NECESSARY TO PROVIDE THE REQUIRED AMOUNT OF FILL UNDER THE BUILDING AND EXTENDING OUT A MINIMUM OF 5'-0" BEYOND THE PERIMETER OF THE BUILDING.

3. THE EXPOSED SUBGRADE SHALL BE PROOFROLLED, SCARIFIED, MOISTURE CONDITIONED AND RECOMPACTED PER THE GEOTECHNICAL REPORT REQUIREMENTS. PROVIDE FIELD DENSITY TESTS ON THE SUBGRADE TO CONFORM WITH THE GEOTECHNICAL REPORT REQUIREMENTS.

4. SELECT FILL MATERIAL FOR THE BUILDING PAD SHALL BE IN ACCORDANCE WITH THE GEOTECHNICAL REPORT REQUIREMENTS. ON-SITE OR ALTERNATE FILL MATERIAL MAY BE SUITABLE FOR USE UNDER THE BUILDING PAD WITH APPROVAL BY THE GEOTECHNICAL ENGINEER. SELECT FILL SHALL BE MOISTURE CONDITIONED AND COMPACTED PER THE GEOTECHNICAL REPORT REQUIREMENTS. PROVIDE FIELD DENSITY AND ATTERBERG TESTS ON THE SELECT FILL TO CONFORM WITH THE GEOTECHNICAL REPORT REQUIREMENTS.

5. FOUNDATION DETAILING SHOWN ON THE DRAWINGS IS BASED ON A MINIMUM OF 6 FEET OF SOILS REMOVED/ REPLACED WITH IMPORTED SELECT FILL OR 8 FEET OF MOISTURE-CONDITIONED ON-SITE SOILS BENEATH THE FLOOR SLAB AND FOOTINGS AND EXTENDING 5'-0" BEYOND THE BUILDING PERIMETER. PROVIDE ADDITIONAL SELECT FILL MATERIAL AS REQUIRED TO BRING THE SLAB UP TO THE FINISH FLOOR ELEVATION SHOWN IN THE CONSTRUCTION DOCUMENTS.

6. IF THE BUILDING PAD HAS BEEN INSTALLED FOR MORE THAN TWO MONTHS PRIOR TO THE PLACEMENT OF THE VAPOR BARRIER, PROVIDE FIELD MOISTURE TESTS FOR THE FULL DEPTH OF THE PAD 96 HOURS PRIOR TO PLACEMENT OF THE WATER VAPOR BARRIER TO ENSURE THAT THE FILL MOISTURE CONTENT HAS BEEN MAINTAINED PRIOR TO CONCRETE PLACEMENT. MOISTURE CONTENTS SHALL BE TAKEN AT 12 INCH VERTICAL INTERVALS WITH A MINIMUM OF TWO TESTS PER BORING AT A RATE OF ONE (1)BORING FOR EVERY 2,500 SQUARE FEET OF PAD WITH A MAXIMUM OF TEN (10). THE MOISTURE CONTENT AND COMPACTION SHALL CONFORM TO THE REFERENCED GEOTECHNICAL REPORT.

7. CONTRACTOR SHALL MAINTAIN A CLEAN EXCAVATION THAT IS FREE OF PONDING WATER 100% OF THE TIME. CONTRACTOR SHALL PROVIDE PUMPS AS REQUIRED TO REMOVE ANY WATER AT ALL TIMES.

8. THE SITE SHALL BE GRADED TO PROVIDE POSITIVE DRAINAGE AWAY FROM THE BUILDING PAD DURING BUILDING PAD INSTALLATION AND WHEN THE BUILDING PAD AND BUILDING ARE COMPLETED.

9. ALL FOOTINGS SHALL BE CONSOLIDATED WITH A CONCRETE VIBRATOR AS PER THE REQUIREMENTS OF ACI 318 AND ACI 308R, LATEST EDITION.

10. FOOTINGS SHALL BE POURED IMMEDIATELY UPON COMPLETION OF EXCAVATION AND CLEANING OF FOOTING BEARING SURFACE. ALL SPOILS FROM THE FOOTING EXCAVATIONS SHALL BE REMOVED FROM THE BUILDING PAD.

11. ALL BACKFILL FOR BURIED PIPES AND CONDUIT WITHIN THE BUILDING PAD AND EXTENDING OUT A MINIMUM OF 5'-0" BEYOND THE BUILDING SHALL BE BACKFILLED WITH SELECT FILL BACKFILL. DO NOT USE SAND BACKFILL. A 1'-0" WIDE BENTONITE PLUG SHALL BE PROVIDED IN ALL UTILITY TRENCHES AT THE FACE OF THE BUILDING FOUNDATION. SEE TYPICAL FOUNDATION DETAILS FOR DETAIL AT PIPE BUILDING ENTRY.

12. PLUMBING AND UTILITY TRENCHES WITHIN THE BUILDING PAD SHALL HAVE PIPING BEDDED ON 6" MINIMUM OF DRY CEMENT STABILIZED SAND WITH 4" MINIMUM ALL AROUND. BACKFILL IN UTILITY TRENCHES SHALL CONSIST OF COMPACTED SELECT FILL. PROVIDE A 1'-0" WIDE BENTONITE PLUG FOR THE FULL DEPTH AND WIDTH OF THE UTILITY TRENCH TO A MINIMUM OF 1'-0" ABOVE THE BOTTOM OF THE FOUNDATION AT THE EXTERIOR FACE OF BUILDING FOUNDATIONS WHERE UTILITY TRENCHES ENTER THE BUILDING.

13. PROVIDE A MINIMUM SIX (6) INCH CLAY CAP FOR A MINIMUM OF 5'-0" AROUND THE PERIMETER OF THE BUILDING. THE CAP SHALL EXTEND AS REQUIRED TO COVER THE LIMITS OF THE EXCAVATION AND SELECT FILL BUILDING PAD MATERIALS.

CONCRETE

1. ALL CONCRETE REINFORCING BARS SHALL CONFORM TO ASTM A615, GRADE 60, EXCEPT WHERE NOTED. NO. 3 BARS SHALL CONFORM TO ASTM A615, GRADE 40. DEFORMED BAR ANCHORS SHALL CONFORM TO ASTM A496, GR 70. ALL WELDED WIRE FABRIC SHALL BE SMOOTH ROUND WIRE IN FLAT SHEETS (NOT ROLLED) AND CONFORM TO ASTM A185.

2. CONCRETE PERTAINING TO THE FOLLOWING ITEMS SHALL HAVE SAND AND CRUSHED CARBONATE AGGREGATE CONFORMING TO ASTM C33, TYPE I/II PORTLAND CEMENT CONFORMING TO ASTM C150 AND FLY ASH CONFORMING TO ASTM C618, CLASS 'C' OR 'F' UP TO 25 PERCENT REPLACEMENT BY MASS. CONCRETE MIX DESIGNS SHALL CONFORM TO ACI 318-11 TABLE 4.2.1, 4.3.1 AND 4.4.1 FOR ADDITIONAL REQUIREMENTS DUE TO FREEZING AND THAWING EXPOSURE CLASS ALONG WITH THE FOLLOWING DESIGNATED COMPRESSIVE STRENGTH (f'c) IN 28 DAYS:

CONCRETE MIX DESIGN REQUIREMENTS

MEMBER TYPE	STRENGTH (PSI)	MAXIMUM AGGREGATE	MAXIMUM W/C RATIO	AIR CONTENT
FOUNDATION				
SPREAD FOOTINGS	3500	1"	0.45	
GRADE BEAMS	3500	1"	0.45	
SLAB ON GRADE	3500	1"	0.45	

CONCRETE

CONCRETE SUPPLIER SHALL BE AWARE OF CEMENTS THAT CAN CAUSE DELAYED ETTRINGITE FORMATION IN THE CEMENT PASTE AND BE PREPARED TO SHOW THAT THE CEMENTS USED WILL NOT CAUSE THIS PROBLEM.

3. CONCRETE PROTECTION FOR REINFORCEMENT SHALL BE AS FOLLOWS; SEE SEC. 7.7 ACI 318, LATEST EDITION FOR CONDITIONS NOT NOTED.

   CONCRETE CAST AGAINST AND PERMANENTLY EXPOSED TO EARTH - 3"

   CONCRETE EXPOSED TO EARTH OR WEATHER:
   #6 THRU #18 BARS - 2"
   #5 BAR AND SMALLER - 1 1/2"

   CONCRETE NOT EXPOSED TO WEATHER OR IN CONTACT WITH GROUND:
   #14 & #18 BAR - 1 1/2"
   #11 BAR AND SMALLER - 3/4"

   BEAMS: PRIMARY REINFORCEMENT AND STIRRUPS - 1 1/2"

4. PROVIDE CHAIR SUPPORTS (AZTEC EZ CHAIR, WHC SERIES 'B' OR EQUAL) TO ADEQUATELY SUPPORT BARS FOR PROPER CLEARANCE AS RECOMMENDED BY THE AMERICAN CONCRETE INSTITUTE AND THE CONCRETE REINFORCING STEEL INSTITUTE. SLAB ON GRADE REINFORCEMENT SHALL BE SUPPORTED AT 45-INCH MAXIMUM INTERVALS OR EVERY THIRD BAR.

5. NO HORIZONTAL JOINTS WILL BE PERMITTED IN CONCRETE EXCEPT WHERE THEY NORMALLY OCCUR OR WHERE NOTED. VERTICAL JOINTS SHALL ONLY OCCUR AT LOCATIONS APPROVED BY THE STRUCTURAL ENGINEER.

6. DETAILING OF CONCRETE REINFORCEMENT AND ACCESSORIES SHALL BE IN ACCORDANCE WITH ACI PUBLICATION 315, LATEST EDITION. ALL HOOKED BARS SHOWN IN DETAILS SHALL HAVE STANDARD HOOKS UNLESS NOTED OTHERWISE.

7. REINFORCING BARS SHALL NOT BE WELDED WITHOUT APPROVAL OF THE STRUCTURAL ENGINEER.

8. ALL CONTINUOUS REINFORCEMENT SHALL BE SPLICED WITH A CLASS 'B' TENSION SPLICE, UNLESS NOTED OTHERWISE. PROVIDE TOP AND BOTTOM BARS (TWO 36" LEGS MINIMUM WITH 90 DEGREE BEND) TO MATCH SIZE AND SPACING OF CONTINUOUS REINFORCING AT CORNERS AND INTERSECTIONS, AND AT 18" ON CENTER VERTICALLY AT WALLS.

9. ALL MIXING, TRANSPORTING, PLACING AND CURING OF CONCRETE SHALL BE DONE IN ACCORDANCE WITH THE RECOMMENDATIONS OF THE AMERICAN CONCRETE INSTITUTE, ACI 301, LATEST EDITION.

10. ALL BASE PLATES AND ANCHOR RODS SHALL BE PROTECTED WITH 3" (MIN.) OF CONCRETE. ANCHOR RODS SHALL BE FABRICATED FROM FULL BODIED STEEL RODS CONFORMING TO ASTM F1554, GRADE 36, WASHERS CONFORMING TO ASTM F436 AND NUTS CONFORMING TO ASTM A194 OR A563 AND HAVING THE SAME DIAMETER AS THE BOLT DIAMETER AND USING CUT THREADS. ROLLED THREADS ARE NOT ACCEPTABLE. BOLTS SHALL BE SET USING RIGID TEMPLATES.

11. PROVIDE 2-#5x6'-0" AT RE-ENTRANT CORNERS OF SLAB ON GRADE.

12. ALL DOWELS, ANCHOR BOLTS, EMBEDDED STEEL, ELECTRICAL CONDUITS, PIPE SLEEVES, PIPING, WATERSTOPS, INSERTS, GROUNDS, AND ALL OTHER EMBEDDED ITEMS AND FORMED DETAILS SHALL BE IN PLACE BEFORE START OF CONCRETE PLACEMENT. FOR EMBEDDED ITEMS AND REQUIRED DETAILS, SEE MECHANICAL, ELECTRICAL, AND ARCHITECTURAL DRAWINGS. VERIFY SIZE AND LOCATIONS OF ALL OPENINGS.

ISSUE/REVISIONS

#	DESCRIPTION	DATE

DUNAWAY
118 Broadway Suite 201 San Antonio, Texas 78205
Tel: 210.267.5246
(TX REG. F-1114)

muñoz
1017 NORTH MAIN • SAN ANTONIO, TX 78212
0.210.349.1163 • F. 210.525.1038 • MUNOZ-CO.COM

GENERAL NOTES

WORLD HERITAGE CENTER
SAN ANTONIO, TX

THIS DOCUMENT IS RELEASED FOR THE PURPOSE OF INTERIM REVIEW UNDER THE AUTHORITY OF NOLAN P. WOYNER, PE 128820 ON DECEMBER 1, 2021 . IT IS NOT TO BE USED FOR CONSTRUCTION, BIDDING, OR PERMIT PURPOSES.

JOB NO.	5675
DESIGNED BY:	KK
DRAWN BY:	KK
CHECKED BY:	NW
DATE:	DECEMBER 1, 2021
SHEET:	S-000

STRUCTURAL STEEL

1. A NON-SHRINK GROUT SHALL BE USED UNDER ALL STEEL COLUMN BASE PLATES. GROUT SHALL CONFORM TO ASTM C1107 AND THE CORPS OF ENGINEERS SPECIFICATION CRD-C-621. GROUT SHALL HAVE A MINIMUM COMPRESSIVE STRENGTH OF 6000 PSI. 100 PERCENT OF VOID UNDER ALL BASE PLATES IS TO BE GROUTED. ALL BASE PLATES WITH A DIMENSION GREATER THAN 24" SHALL HAVE TWO 1" DIAMETER GROUT HOLES. IF THE SPACE UNDER A COLUMN BASE PLATE IS LESS THAN 1/4", A PRESSURE INJECTION SYSTEM SHALL BE USED.

2. ALL STRUCTURAL STEEL DESIGN, DETAILING, FABRICATION AND ERECTION SHALL CONFORM TO LOAD AND RESISTANCE FACTOR DESIGN (LRFD) ACCORDING TO THE LATEST EDITION AISC SPECIFICATION.

3. ALL WELDING SHALL CONFORM TO THE STANDARDS OF THE LATEST EDITION OF THE MANUAL OF STEEL CONSTRUCTION OF THE AMERICAN INSTITUTE OF STEEL CONSTRUCTION, AND THE AMERICAN WELDING SOCIETY ANSI/AWS D1.1 STRUCTURAL WELDING CODE-STEEL. WELDING OF REINFORCING BARS SHALL COMPLY TO THE AMERICAN WELDING SOCIETY AWS D1.4. SHORT CIRCUIT TRANSFER FOR THE GAS METAL ARC WELDING PROCESS IS NOT PERMITTED.

4. ELECTRODES FOR ALL FIELD AND SHOP WELDING SHALL BE CLASS E70XX. ELECTRODES FOR MOMENT CONNECTIONS SHALL BE CLASS E7018 WITH A CHARPY TOUGHNESS OF AT LEAST 20 T-LBS AT –20 DEGREES FAHRENHEIT.

5. ALL STRUCTURAL STEEL ROLLED W-SHAPES SHALL CONFORM TO ASTM A992, AND ALL ANGLES, BARS, CHANNELS AND PLATES SHALL CONFORM TO ASTM A36. ALL SQUARE AND RECTANGULAR HSS (Fy 50 KSI) AND ROUND HSS (Fy 46KSI) SHALL CONFORM TO ASTM A500 GRADE C. ROUND PIPES (Fy 36KSI) SHALL CONFORM TO ASTM A53 GR B.

6. ALL STRUCTURAL STEEL DETAILS AND CONNECTIONS SHALL CONFORM TO STANDARDS OF THE AISC. DOUBLE CONNECTIONS THROUGH COLUMN WEBS, BEAMS THAT FRAME OVER THE TOP OF COLUMNS, AND BEAM TO BEAM CONNECTIONS SHALL HAVE A BEAM ERECTION SEAT OR A STAGGERED CONNECTION WITH AT LEAST ONE INSTALLED BOLT REMAINING IN PLACE TO SUPPORT THE FIRST BEAM WHILE THE SECOND BEAM IS BEING ERECTED.

7. LRFD BEAM REACTIONS USED ARE SHOWN ON PLAN. SIMPLE SHEAR CONNECTIONS SHALL BE SELECTED FROM THE TABLES IN PART 10 OF THE LATEST EDITION OF THE MANUAL OF STEEL CONSTRUCTION OF THE AISC FOLLOWING LRFD DESIGN. TABLE 10—1 MAY BE USED FOR ALL-BOLTED DOUBLE ANGLE CONNECTIONS. TABLE 10-2 MAY BE USED FOR WELDED/BOLTED DOUBLE ANGLE CONNECTIONS. TABLE 10-3 MAY BE USED FOR ALL-WELDED DOUBLE ANGLE CONNECTIONS. TABLE 10-10a MAY BE USED FOR SINGLE-PLATE CONNECTIONS.
IF NO REACTION IS INDICATED, CONNECTIONS SHALL BE DESIGNED FOR ONE-HALF THE TOTAL ALLOWABLE UNIFORM LOAD GIVEN IN TABLE 3-6 THROUGH 3-9 IN PART 3 OF THE MANUAL OF STEEL CONSTRUCTION OF THE AISC. CONNECTIONS FOR COMPOSITE BEAMS SHALL HAVE THE STANDARD AISC CAPACITY INCREASED BY 35 PERCENT.

8. FOR CONNECTIONS THAT DO NOT APPLY TO SIMPLE SHEAR CONNECTIONS PER PART 10 OF THE AISC, THE STRUCTURAL STEEL CONNECTIONS FOR ALL CONNECTIONS NOT FULLY DETAILED ON DRAWINGS SHALL BE DESIGNED BY THE LICENSED PROFESSIONAL STRUCTURAL ENGINEER WORKING FOR THE FABRICATOR.
DESIGN CRITERIA: LRFD
LOAD DATA:
BRACING CONNECTIONS: SEE REACTIONS SHOWN ON DRAWINGS
AT LEAST 10 DAYS PRIOR TO SUBMITTAL OF THE SHOP AND ERECTION DRAWINGS, PROVIDE SAMPLE SUBSTANTIATING CONNECTION INFORMATION IN THE FORM OF SAMPLE CALCULATIONS FOR REVIEW AND COMMENT BY ENGINEER OF RECORD. AFTER REVIEW COMPLETED FOR SAMPLE CALCULATIONS, PROVIDE FINAL CALCULATIONS WITH THE SHOP AND ERECTION DRAWINGS. CALCULATIONS SHALL BE SIGNED AND SEALED BY THE LICENSED PROFESSIONAL ENGINEER IN THE STATE OF TEXAS IN RESPONSIBLE CHARGE OF THE CONNECTION DESIGN. THE OWNER'S DESIGNATED REPRESENTATIVE FOR DESIGN IS THE FINAL AUTHORITY IN THE EVENT OF A DISAGREEMENT BETWEEN PARTIES REGARDING THE DESIGN OF CONNECTIONS PER AISC 303 SECTION 4.4.

9. ALL MISCELLANEOUS WELDS (FIELD OR SHOP) SHALL BE MINIMUM SIZE FILLET ALL AROUND IN ACCORDANCE WITH AISC. WELDING OF CONTINUOUS MEMBERS SHALL BE A MINIMUM OF 2 INCHES OF 3/16 INCH FILLET STITCH WELDS AT 12 INCHES O.C., STAGGERED EACH SIDE, UNLESS NOTED OTHERWISE. COLUMN BASE PLATES, CAP PLATES AND STIFFENER PLATES SHALL BE WELDED ALL AROUND.

10. PROVIDE ALL NECESSARY HOLES IN MISCELLANEOUS STRUCTURAL STEEL MEMBERS FOR ATTACHMENT OF NON-STRUCTURAL ITEMS (IE: WINDOW HEAD ANCHORS, CAST STONE ATTACHMENT, ETC), SEE ARCHITECTURAL DRAWINGS FOR REQUIREMENTS.

11. SPLICING OF STRUCTURAL STEEL MEMBERS WHERE NOT DETAILED IS PROHIBITED WITHOUT PRIOR APPROVAL OF THE STRUCTURAL ENGINEER.

12. ALL CONNECTION BOLTS FOR STRUCTURAL STEEL MEMBERS SHALL CONFORM TO ASTM A325 EXCEPT WHERE NOTED OTHERWISE. MINIMUM SIZE SHALL BE 3/4 INCH DIAMETER UNLESS NOTED OTHERWISE. BOLTS SHALL BE TWIST OFF TYPE TENSION CONTROLLED BOLTS CONFORMING TO ASTM F1852 WITH HARDENED WASHERS UNDER THE NUT. HEX HEAD NUTS SHALL CONFORM TO ASTM A563 AND WASHERS SHALL CONFORM TO ASTM F436.

13. SHOP BOLTED CONNECTIONS ARE PERMISSIBLE IF SUFFICIENT BOLT CLEARANCE IS AVAILABLE FOR TIGHTENING OF HIGH STRENGTH BOLTS. CLEARANCES SHALL BE IN ACCORDANCE WITH TABLE 7-16 AND 7-17 OF THE LATEST EDITION OF THE MANUAL OF STEEL CONSTRUCTION OF THE AISC. ALL STEEL MEMBERS AND ASSEMBLIES SHALL BE SHOP FABRICATED TO THE GREATEST EXTENT POSSIBLE. TRUSSES SHALL BE PREASSEMBLED, AND FIELD SPLICES FOR SHIPPING SHALL BE APPROVED BY THE ENGINEER OF RECORD. THE STEEL FABRICATOR AND THE STEEL ERECTOR SHALL COORDINATE THE SHOP FABRICATION, SHIPPING AND ERECTION OF ALL STRUCTURAL MEMBERS AND ASSEMBLIES.

14. ALL STEEL LINTEL ANGLES ARE DESIGNED TO FULLY SUPPORT THE MASONRY VENEER WITH SOME NORMAL DEFLECTION DURING INSTALLATION. MASONRY SHALL BE INSTALLED WITHOUT SHORING THE SUPPORT ANGLE DURING CONSTRUCTION. SHORING THE MASONRY DURING CONSTRUCTION CAN RESULT IN HORIZONTAL BED JOINT CRACKING WHEN THE SHORES ARE REMOVED.

15. FOR STEEL BEAMS SHOWN ON THE DRAWINGS THAT DO NOT MEET THE MINIMUM SIZE REQUIRED BY THE U.L. DESIGN NUMBER, WHICH IS SELECTED BY THE ARCHITECT, THE THICKNESS OF THE SPRAYED FIRE PROTECTION MATERIAL SHALL BE INCREASED. INCREASED THICKNESS OF SPRAYED FIRE PROTECTION MATERIAL SHALL BE AS REQUIRED BY THE FORMULA SHOWN IN THE U.L. FIRE RESISTANCE DIRECTORY LATEST EDITION UNDER ADJUSTMENT OF SPRAYED PROTECTION MATERIAL THICKNESS FOR RESTRAINED BEAM RATINGS FOR VARIOUS BEAM SIZES.

16. FOR STEEL COLUMNS SHOWN ON THE DRAWINGS THAT DO NOT MEET THE MINIMUM SIZE REQUIRED BY THE U.L. DESIGN NUMBER, WHICH IS SELECTED BY THE ARCHITECT, THE THICKNESS OF THE SPRAYED FIRE PROTECTION MATERIAL SHALL BE INCREASED. INCREASED THICKNESS OF SPRAYED FIRE PROTECTION MATERIAL SHALL BE AS REQUIRED BY THE FORMULA SHOWN IN THE U.L. FIRE RESISTANCE DIRECTORY LATEST EDITION.

STRUCTURAL STEEL

17. SOME U.L. RATINGS, WHICH ARE SELECTED BY THE ARCHITECT, REQUIRE SPECIAL MEMBER SIZES FOR THE DESIGN AND FABRICATION OF OPEN WEB STEEL JOISTS. THE JOIST MANUFACTURER SHALL DESIGN ALL JOISTS TO MEET THE REQUIREMENTS SPECIFIED IN THE LATEST EDITION OF THE U.L. FIRE RESISTANCE DIRECTORY.

18. ALL STRUCTURAL STEEL WHICH IS OUTSIDE THE BUILDING ENVELOPE SHALL BE HOT DIPPED GALVANIZED. ZINC COATING SHALL MEET THE REQUIREMENTS OF ASTM 123-73, WITH A MINIMUM COATING CLASS OF G60 UNLESS SPECIFIED OTHERWISE BY ARCHITECT AND SHALL BE APPLIED AFTER FABRICATION. ALL FIELD WELDS SHALL BE GROUND SMOOTH AND TOUCHED UP WITH A ZINC RICH PAINT.

19. STEEL FABRICATOR SHALL PROVIDE ALL SAFETY CABLE HOLES AND/OR ERECTION PLATES ATTACHED TO THE COLUMN. PROVIDE AN L3x3x1/4 DECK SUPPORT ANGLE ON ALL SIDES OF THE COLUMN.

20. THE GENERAL CONTRACTOR AND SUBCONTRACTOR'S SHALL COMPLY TO OSHA 29 CFR 1926 SUBPART R, SAFETY STANDARDS FOR STEEL ERECTION.

21. AS SCOPE AND PERFORMANCE DOCUMENTS, THE DRAWINGS AND SPECIFICATIONS DO NOT INDICATE OR DESCRIBE ALL OF THE WORK REQUIRED FOR THE PERFORMANCE AND COMPLETION OF THIS WORK. THE CONTRACTOR SHALL BE SOLELY RESPONSIBLE FOR THE FABRICATION AND INSTALLATION OF ALL MISCELLANEOUS METAL ITEMS INDICATED, DESCRIBED, OR IMPLIED ON THE STRUCTURAL AND/OR THE ARCHITECTURAL DRAWINGS. MISCELLANEOUS STEEL ITEMS, WITHIN AN ASSEMBLY AND NOT ATTACHED TO THE STRUCTURE, ARE THE RESPONSIBILITY OF THE GENERAL CONTRACTOR AND SUBCONTRACTORS WHETHER THEY ARE SHOWN OR NOT SHOWN ON THE ARCHITECTURAL OR STRUCTURAL DRAWINGS. SUCH ASSEMBLIES INCLUDE BUT ARE NOT LIMITED TO, EXTERIOR AND INTERIOR WALLS, CEILINGS, PARTITIONS, SHELVES AND CABINETS, AND ALL OTHER SIMILAR ASSEMBLIES. ANY MISCELLANEOUS METAL ITEMS INDICATED ON THE ARCHITECTURAL DRAWINGS WITHOUT SIZES AND NOT SHOWN ON STRUCTURAL DRAWINGS SHALL BE A MINIMUM OF L4x4x1/2", C7x9.8, 3/8" PLATE OR HSS4x4x3/8" UNLESS OTHERWISE APPROVED BY THE STRUCTURAL ENGINEER.

METAL ROOF DECK

1. ROOF SYSTEM OVER STEEL FRAMING SHALL BE RIGID INSULATION BOARD ON 3" DEEP, TYPE NL GALVANIZED DECK (CONFORMING TO ASTM A924, WITH MINIMUM COATING CLASS OF G60 AS DEFINED IN ASTM A653) MANUFACTURED FROM COLD ROLLED STEEL AND CONFORMING TO ASTM A653 OR ASTM A611 WITH FY=50KSI. SEE 10/S-004 FOR ADDITIONAL DECK INFORMATION AND ATTACHMENT PATTERN.

2. PROPERTIES AND ALLOWABLE STRESSES OF STEEL ROOF DECKS SHALL BE BASE ON THE AISI "NORTH AMERICAN SPECIFICATION FOR THE DESIGN OF COLD-FORMED STEEL STRUCTURAL MEMBERS"

3. STEEL DECK SHALL ALWAYS BE INSTALLED WITH DIRECTION OF FLUTES PERPENDICULAR TO SUPPORTING STEEL FRAMING MEMBERS. DECK SHALL BE CUT TO INSURE A MINIMUM OF TWO SPANS.

SOILS
(TABLE 1705.6)

	VERIFICATION AND INSPECTION	INSPECTION FREQUENCY	
		CONTINUOUS	PERIODIC
1.	VERIFY MATERIALS BELOW SHALLOW FOUNDATIONS ARE ADEQUATE TO ACHIEVE THE DESIGN BEARING CAPACITY.		X
2.	VERIFY EXCAVATIONS ARE EXTENDED TO PROPER DEPTH AND HAVE REACHED PROPER MATERIAL.		X
3.	PERFORM CLASSIFICATION AND TESTING OF COMPACTED FILL MATERIALS.		X
4.	VERIFY USE OF PROPER MATERIALS, DENSITIES AND LIFT THICKNESSES DURING PLACEMENT AND COMPACTION OF COMPACTED FILL.	X	
5.	PRIOR TO PLACEMENT OF COMPACTED FILL, INSPECT SUBGRADE AND VERIFY THAT SITE HAS BEEN PREPARED PROPERLY.		X

CONCRETE CONSTRUCTION
(TABLE 1705.3)

	VERIFICATION AND INSPECTION	INSPECTION FREQUENCY	
		CONTINUOUS	PERIODIC
1.	INSPECT REINFORCEMENT, INCLUDING PRESTRESSING TENDONS, AND VERIFY PLACEMENT.		X
2.	REINFORCING BAR WELDING:		
a.	VERIFY WELDABILITY OF REINFORCING BARS OTHER THAN ASTM A 706		X
b.	INSPECT SINGLE-PASS FILLET WELDS, MAXIMUM 5/16"		X
c.	INSPECT ALL OTHER WELDS	X	
3.	INSPECT ANCHORS CAST IN CONCRETE		X
4.	INSPECT ANCHORS POST-INSTALLED IN HARDENED CONCRETE MEMBERS.		
a.	ADHESIVE ANCHORS INSTALLED IN HORIZONTALLY OR UPWARDLY INCLINED ORIENTATIONS TO RESIST SUSTAINED TENSION LOADS.	X	
b.	MECHANICAL ANCHORS AND ADHESIVE ANCHORS NOT DEFINED IN 4.a.		X
5.	VERIFYING USE OF REQUIRED DESIGN MIX.		X
6.	PRIOR TO CONCRETE PLACEMENT, FABRICATE SPECIMENS FOR STRENGTH TESTS, PERFORM SLUMP AND AIR CONTENT TESTS, AND DETERMINE THE TEMPERATURE OF THE CONCRETE	X	
8.	VERIFY MAINTENANCE OF SPECIFIED CURING TEMPERATURE AND TECHNIQUES.		X

STRUCTURAL STEEL CONSTRUCTION
(AISC 360)

	VERIFICATION AND INSPECTION	INSPECTION FREQUENCY	
		CONTINUOUS	PERIODIC
1.	INSPECTION TASKS PRIOR TO WELDING (TABLE N5.4-1)		
a.	WELDER QUALIFICATION RECORDS AND CONTINUITY RECORDS	X	
b.	WELDING PROCEDURE SPECIFICATIONS (WPS) AVAILABLE	X	
c.	MANUFACTURER CERTIFICATIONS FOR WELDING CONSUMABLES AVAILABLE	X	
d.	MATERIAL IDENTIFICATION (TYPE/GRADE)		X
e.	WELDER IDENTIFICATION SYSTEM		X
f.	FIT-UP GROOVE WELDS (INCLUDING JOINT GEOMETRY)		
	1) JOINT PREPARATION		X
	2) DIMENSIONS (ALIGNMENT, ROOT OPENING, ROOT FACE, BEVEL)		X
	3) CLEANLINESS (CONDITION OF STEEL SURFACES)		X
	4) TACKING (TACK WELD QUALITY AND LOCATION)		X
	5) BACKING TYPE AND FIT (IF APPLICABLE)		X
g.	FIT-UP of CJP GROOVE WELDS OF HSS T-, Y- AND K-JOINTS WITHOUT BACKING (INCLUDING JOINT GEOMETRY)		
	1) JOINT PREPARATIONS	X	
	2) DIMENSIONS (ALIGNMENT, ROOT OPENING, ROOT FACE, BEVEL)	X	
	3) CLEANLINESS (CONDITION OF STEEL SURFACES)	X	
	4) TACKING (TACK WELD QUALITY AND LOCATION)	X	
	5) BACKING TYPE AND FIT (IF APPLICABLE)	X	
h.	CONFIGURATION AND FINISH OF ACCESS HOLES		X
i.	FIT-UP OF FILLET WELDS		
	1) DIMENSIONS (ALIGNMENT, GAPS AT ROOT)		X
	2) CLEANLINESS (CONDITION OF STEEL SURFACES)		X
	3) TACKING (TACK WELD QUALITY AND LOCATION)		X
j.	CHECK WELDING EQUIPMENT		X

STRUCTURAL STEEL CONSTRUCTION
(AISC 360)

	VERIFICATION AND INSPECTION	INSPECTION FREQUENCY	
		CONTINUOUS	PERIODIC
2.	INSPECTION TASKS DURING WELDING (TABLE N5.4-2)		
a.	CONTROL AND HANDLING OF WELDING CONSUMABLES		
	1) PACKAGING		X
	2) EXPOSURE CONTROL		X
b.	NO WELDING OVER CRACKED TACK WELDS		X
c.	ENVIRONMENTAL CONDITIONS		
	1) WIND SPEED WITHIN LIMITS		X
	2) PRECIPITATION AND TEMPERATURE		X
d.	WPS FOLLOWED		
	1) SETTINGS ON WELDING EQUIPMENT		X
	2) TRAVEL SPEED		X
	3) SELECTED WELDING MATERIALS		X
	4) SHIELDING GAS TYPE/FLOW RATE		X
	5) PREHEAT APPLIED		X
	6) INTERPASS TEMPERATURE MAINTAINED (MIN/MAX)		X
	7) PROPER POSITION (F,V,H,OH)		X
e.	WELDING TECHNIQUES		
	1) INTERPASS AND FINAL CLEANING		X
	2) EACH PASS WITHIN PROFILE LIMITATIONS		X
	3) EACH PASS MEETS QUALITY REQUIREMENTS		X
f.	PLACEMENT AND INSTALLATION OF STEEL HEADED STUD ANCHORS	X	
3.	INSPECTION TASKS AFTER WELDING (TABLE N5.4-3)		
a.	WELDS CLEANED		X
b.	SIZE, LENGTH AND LOCATION OF WELDS	X	
c.	WELDS MEET VISUAL ACCEPTANCE CRITERIA		
	1) CRACK PROHIBITION	X	
	2) WELD/BASE-METAL FUSION	X	
	3) CRATER CROSS SECTION	X	
	4) WELD PROFILES	X	
	5) WELD SIZE	X	
	6) UNDERCUT	X	
	7) POROSITY	X	
d.	ARC STRIKES	X	
e.	K-AREA	X	
f.	BACKING REMOVED AND WELD TABS REMOVED (IF REQUIRED)	X	
g.	REPAIR ACTIVITIES	X	
h.	DOCUMENT ACCEPTANCE OR REJECTION OF WELDED JOINT OR MEMBER	X	
i.	NO PROHIBITED WELDS HAVE BEEN ADDED WITHOUT THE APPROVAL OF THE EOR		X
4.	INSPECTION TASKS PRIOR TO BOLTING (TABLE N5.6-1)		
a.	MANUFACTURER'S CERTIFICATION AVAILABLE FOR FASTENER MATERIALS	X	
b.	FASTENERS MARKED IN ACCORDANCE WITH ASTM REQUIREMENTS		X
c.	PROPER FASTENERS SELECTED FOR JOINT DETAIL (GRADE, TYPE, BOLT LENGTH IF THREADS ARE TO BE EXCLUDED FROM SHEAR PLANE)		X
d.	PROPER BOLTING PROCEDURE SELECTED FOR JOINT DETAIL		X
e.	CONNECTING ELEMENTS, INCLUDING APPROPRIATE FAYING SURFACE CONDITION AND HOLE PREPARATION, IF SPECIFIED, MEET APPLICABLE REQUIREMENTS		X
f.	PRE-INSTALLATION VERIFICATION TESTING BY INSTALLATION PERSONNEL OBSERVED AND DOCUMENTED FOR FASTENER ASSEMBLIES AND METHODS USED		X
g.	PROPER STORAGE PROVIDED FOR BOLTS, NUTS, WASHERS, AND OTHER FASTENER COMPONENTS		X
5.	INSPECTION TASKS DURING BOLTING (TABLE N5.6-2)		
a.	FASTENER ASSEMBLIES PLACED IN ALL HOLES AND WASHERS AND NUTS ARE POSITIONED AS REQUIRED		X
b.	JOINT BROUGHT TO THE SNUG-TIGHT CONDITION PRIOR TO PRETENSIONING OPERATIONS		X
c.	FASTENER COMPONENT NOT TURNED BY THE WRENCH PREVENTED FROM ROTATING		X
d.	FASTENERS ARE PRETENSIONED IN ACCORDANCE WITH RCSC SPECIFICATION, PROGRESSING SYSTEMATICALLY FROM THE MOST RIGID POINT TOWARD THE FREE EDGES		X
6.	INSPECTION TASKS AFTER BOLTING		
a.	DOCUMENT ACCEPTANCE OR REJECTION OF BOLTED CONNECTIONS	X	
7.	OTHER STEEL INSPECTIONS (SECTION N5.7)		
a.	VERIFICATION AND DOCUMENTATION OF DIAMETER, GRADE, TYPE AND LENGTH OF ANCHOR RODS AND OTHER EMBEDMENTS SUPPORTING STRUCTURAL STEEL	X	
b.	VERIFICATION OF THE FABRICATED STEEL OR ERECTED STEEL FRAME TO COMPLY WITH DETAILS SHOWN ON CONSTRUCTION DOCUMENTS		X

ISSUE/REVISIONS

#	DESCRIPTION	DATE

DUNAWAY
118 Broadway Suite 201 San Antonio, Texas 78205
Tel: 210.267.5246
(TX REG. F-1114)

MUÑOZ
1017 NORTH MAIN • SAN ANTONIO, TX 78212
0.210.349.1163 • F. 210.525.1038 • MUNOZ-CO.COM

GENERAL NOTES

WORLD HERITAGE CENTER
SAN ANTONIO, TX

THIS DOCUMENT IS RELEASED FOR THE PURPOSE OF INTERIM REVIEW UNDER THE AUTHORITY OF NOLAN P. WOYNER, PE 128820 ON DECEMBER 1, 2021 . IT IS NOT TO BE USED FOR CONSTRUCTION, BIDDING, OR PERMIT PURPOSES.

JOB NO. 5675
DESIGNED BY: KK
DRAWN BY: KK
CHECKED BY: NW
DATE: DECEMBER 1, 2021
SHEET: **S-001**

DEVELOPMENT LENGTHS OF STANDARD HOOKS IN TENSION GRADE 60 REINFORCEMENT/NORMAL WEIGHT CONCRETE									
BAR SIZE	F'c=3000		F'c=4000		F'c=5000		F'c=6000		BAR SIZE
	L_{hb}	$0.7L_{hb}$	L_{hb}	$0.7L_{hb}$	L_{hb}	$0.7L_{hb}$	L_{hb}	$0.7L_{hb}$	
#3	9	6	8	5	7	5	6	5	#3
#4	11	8	10	7	9	6	8	6	#4
#5	14	10	12	9	11	8	10	7	#5
#6	17	12	15	10	13	9	12	9	#6
#7	20	14	17	12	15	11	14	10	#7
#8	22	16	19	14	17	12	16	11	#8
#9	25	18	22	15	20	14	18	13	#9
#10	28	20	25	17	22	16	20	14	#10
#11	31	22	27	19	24	17	22	16	#11

90° HOOKS **180° HOOKS**

NOTES:

1. $L_{dh} = L_{hb}$ UNLESS CONDITIONS OF ITEM 2 ARE SATISFIED
2. $L_{dh} = 0.7\ L_{hb}$ FOR #11 BARS AND SMALLER WHEN SIDE COVER (NORMAL TO PLANE OR HOOK) IS NOT LESS THAN 2 1/2 INCHES AND 90° HOOKS AND COVER ON BAR EXTENSION BEYOND HOOK IS NOT LESS THAN 2 INCHES.
3. HOOKS ARE NOT CONSIDERED EFFECTIVE FOR DEVELOPING BARS IN COMPRESSION.
4. Ldh SHALL BE MULTIPLIED BY 1.2 FOR EPOXY-COATED HOOKED BARS.

12 DEVELOPMENT LENGTHS OF STANDARD HOOKS IN TENSION
SCALE: 3/4" = 1'-0"

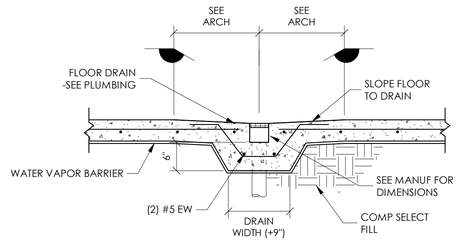

NOTE: VERIFY LOCATION WITH PLUMBING DRAWINGS

9 FLOOR DRAIN DETAIL
SCALE: 3/4" = 1'-0"

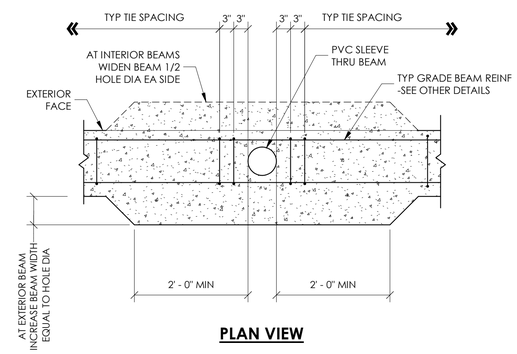

NOTE: TYPICAL VERTICAL HOLE THROUGH GRADE BEAM LARGER THAN 4" DIA

PLAN VIEW

6 GRADE BEAM PENETRATION DETAIL
SCALE: 3/4" = 1'-0"

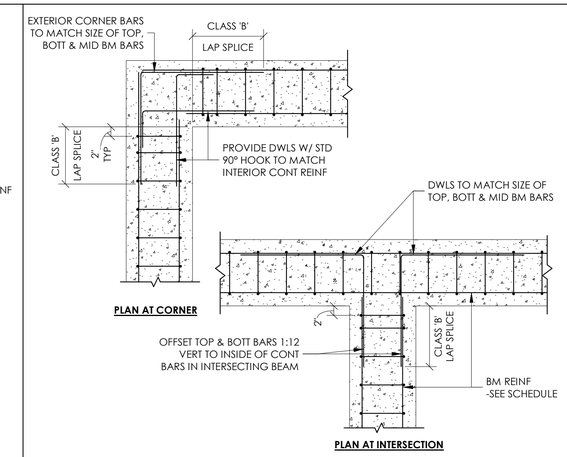

3 TYPICAL CORNER BAR DETAIL
SCALE: 3/4" = 1'-0"

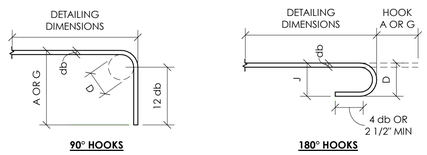

90° HOOKS **180° HOOKS**

RECOMENDED END HOOKS, ALL GRADES

BAR SIZE	FINISHED BEND DIAMETER, D (IN)	180° HOOKS		90° HOOKS
		A OR G, (IN)	J, (IN)	A OR G, (IN)
#3	2 1/4	5	3	6
#4	3	6	4	8
#5	3 3/4	7	5	10
#6	4 1/2	8	6	12
#7	5 1/4	10	7	14
#8	6	11	8	16
#9	9 1/2	15	11 3/4	19
#10	10 3/4	17	13 1/4	22
#11	12	19	14 3/4	24
#14	18 1/4	27	21 3/4	31
#18	24	36	28 1/2	41

D= INSIDE DIAMETER OF BEND

11 END HOOK SCHEDULE
SCALE: 3/4" = 1'-0"

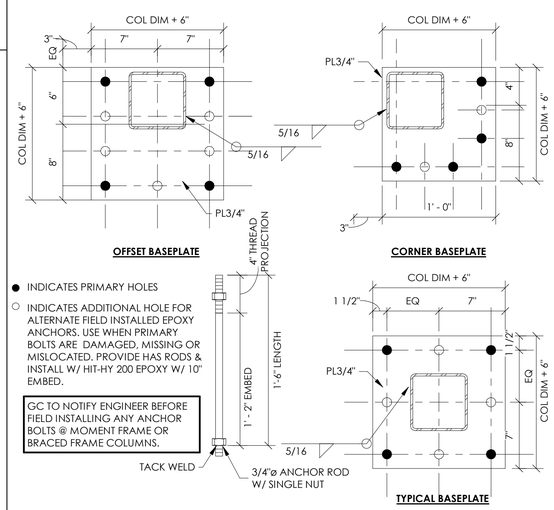

- ● INDICATES PRIMARY HOLES
- ○ INDICATES ADDITIONAL HOLE FOR ALTERNATE FIELD INSTALLED EPOXY ANCHORS. USE WHEN PRIMARY BOLTS ARE DAMAGED, MISSING OR MISLOCATED. PROVIDE HAS RODS & INSTALL W/ HIT-HY 200 EPOXY W/ 10" EMBED.

GC TO NOTIFY ENGINEER BEFORE FIELD INSTALLING ANY ANCHOR BOLTS @ MOMENT FRAME OR BRACED FRAME COLUMNS.

8 TYPICAL TUBE COLUMN BASEPLATE DETAIL
SCALE: 1 1/2" = 1'-0"

NOTE: TYPICAL HORIZONTAL HOLE THROUGH GRADE BEAM LARGER THAN 4" DIA

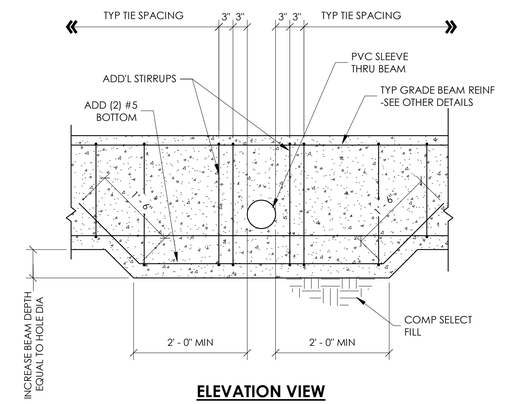

ELEVATION VIEW

5 GRADE BEAM PENETRATION DETAIL
SCALE: 3/4" = 1'-0"

NOTES:

1. JOINTS MAY NOT OCCUR IN THE FIRST SPAN OF A BEAM LINE OR IN ANY SPAN WHICH IS LESS THAN 8 FEET.
2. LOCATE JOINTS IN MIDDLE THIRD OF BEAM SPAN BETWEEN SUPPORTS.

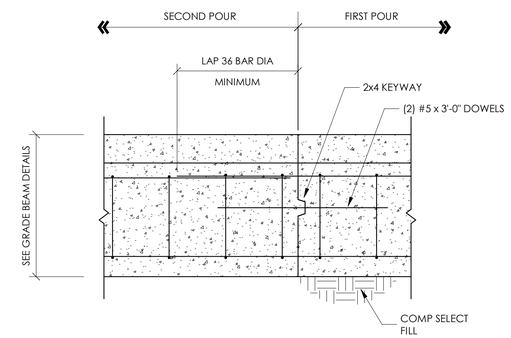

ELEVATION VIEW

2 GRADE BEAM CONSTRUCTION JOINT
SCALE: 3/4" = 1'-0"

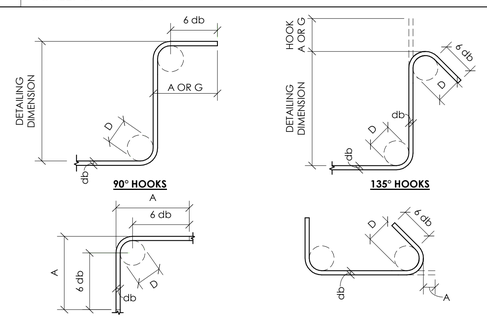

90° HOOKS **135° HOOKS**

CORNER TIE HOOK **CROSS TIE**

STIRRUP & TIE HOOK SCHEDULE

BAR SIZE	D (IN)	90° HOOKS A OR G, (IN)	135° HOOKS A OR G (IN)
#3	1 1/2	4	4
#4	2	4 1/2	4 1/2
#5	2 1/2	6	5 1/2

D= INSIDE DIAMETER OF BEND

10 STIRRUP AND TIE HOOK SCHEDULE
SCALE: 3/4" = 1'-0"

NOTE:
CONCRETE IN BLOCKOUT SHALL BE REINFORCED TO BE EQUIVALENT TO SPECIFIED PROJECT SLAB REINFORCING BUT MAXIMUM SPACING SHALL NOT EXCEED 12"

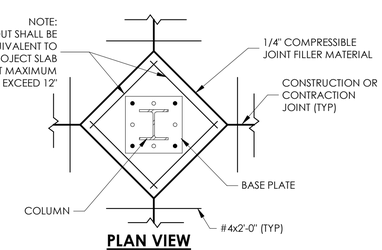

PLAN VIEW

NOTES:

1. GENERAL CONTRACTOR TO COORDINATE REQUIRED SIZE OF BLOCKOUT FOR STRUCTURAL STEEL COLUMN. SUBMIT THE DESIRED BLOCKOUT SIZE TO ARCHITECT FOR APROVAL.
2. PROVIDE 3" MINIMUM CONCRETE COVER ALL AROUND COLUMN AND BASE PLATE.

BASE PLATE SIZE	BLOCK OUT SIZE
10"	1'-8" x 1'-8"
12"	1'-10" x 1'-10"

7 COLUMN BLOCK OUT SCHEDULE
SCALE: 3/4" = 1'-0"

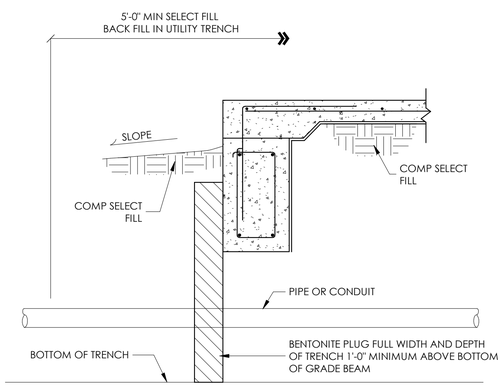

4 PIPE ENTRY DETAIL
SCALE: 3/4" = 1'-0"

CONTRACTION JOINT MAY BE SAWCUT TO 1/4 OF THE SLAB DEPTH NO MORE THAN **6 HOURS** AFTER SLAB PLACEMENT

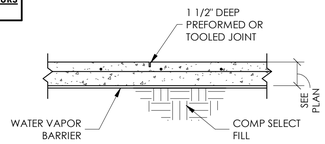

SLAB CONTRACTION JOINT

NOTE: SEE PLAN FOR LOCATION OR SPACE AT 15'x 15' MAXIMUM IN EACH DIRECTION. IF LOCATION IS NOT SHOWN ON PLAN, CONTRACTOR SHALL SUBMIT JOINT LAYOUT TO THE ARCHITECT FOR APPROVAL.

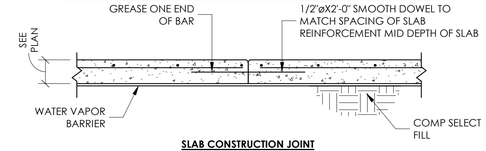

SLAB CONSTRUCTION JOINT

NOTE: AT CONTRACTOR'S OPTION, CONSTRUCTION JOINT MAY BE USED IN LIEU OF CONTRACTION JOINT. LOCATIONS SHALL BE PROPOSED BY THE CONTRACTOR AND APPROVED BY THE ARCHITECT.

1 SLAB JOINT DETAIL
SCALE: 3/4" = 1'-0"

#	DESCRIPTION	DATE

ISSUE/REVISIONS

TYPICAL FOUNDATION DETAILS

WORLD HERITAGE CENTER
SAN ANTONIO, TX

DUNAWAY
118 Broadway Suite 201, San Antonio, Texas 78205
O 210.297.2408
(TX REG. F-1145)

muñoz
1017 NORTH MAIN • SAN ANTONIO, TX 78212
O 210.349.1165 • F 210.525.1038 • MUNOZ-CO.COM

THIS DOCUMENT IS RELEASED FOR THE PURPOSE OF INTERIM REVIEW UNDER THE AUTHORITY OF NOLAN P. WOYNER, PE 128820 ON DECEMBER 1, 2021 . IT IS NOT TO BE USED FOR CONSTRUCTION, BIDDING, OR PERMIT PURPOSES.

JOB NO.	5675
DESIGNED BY:	KK
DRAWN BY:	KK
CHECKED BY:	NW
DATE:	DECEMBER 1, 2021
SHEET:	S-002

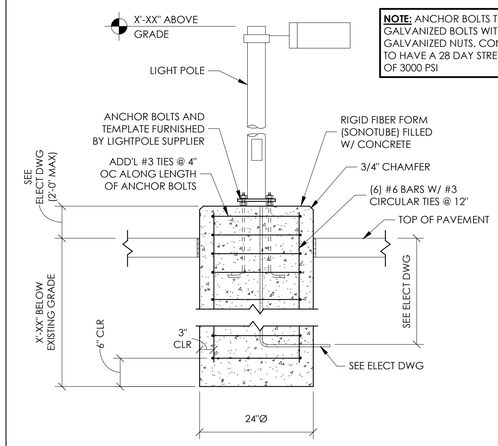

NOTE: ANCHOR BOLTS TO BE GALVANIZED BOLTS WITH GALVANIZED NUTS. CONCRETE TO HAVE A 28 DAY STRENGTH OF 3000 PSI

3 LIGHTPOLE FOUNDATION DETAIL
SCALE: 3/4" = 1'-0"

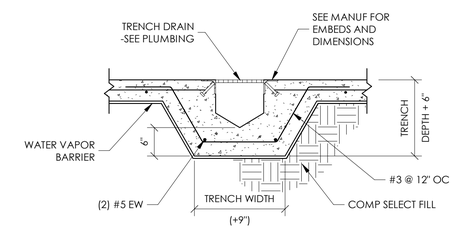

NOTE: VERIFY LOCATION WITH PLUMBING DRAWINGS

2 TRENCH DRAIN DETAIL
SCALE: 3/4" = 1'-0"

TENSION DEVELOPMENT LENGTHS AND TENSION LAP SPLICE LENGTHS
GRADE 60 REINFORCEMENT/NORMAL WEIGHT CONCRETE

BAR SIZE	F'_c=3000		F'_c=4000		F'_c=5000		F'_c=6000		BAR SIZE
	CLASS A 1.0 L_d	CLASS B 1.3 L_d	CLASS A 1.0 L_d	CLASS B 1.3 L_d	CLASS A 1.0 L_d	CLASS B 1.3 L_d	CLASS A 1.0 L_d	CLASS B 1.3 L_d	
#3	17	22	15	19	13	17	12	16	#3
#4	22	29	19	25	17	22	16	20	#4
#5	28	36	24	31	22	28	20	25	#5
#6	33	43	29	37	26	33	24	31	#6
#7	48	63	42	54	37	49	34	44	#7
#8	55	72	48	62	43	55	39	51	#8
#9	62	81	54	70	48	63	44	57	#9
#10	70	91	61	79	54	70	49	64	#10
#11	78	101	67	87	60	78	55	71	#11

NOTES:

1. L_d= TENSION DEVELOPMENT LENGTH.
2. ALL SPLICES ARE IN INCHES.
3. AT SPLICES FOR TOP BARS, MULTIPLY SPLICE LENGTHS (OR L_d/2 AS NOTED IN BEAM SCHEDULE) BY 1.30. A TOP BAR IS DEFINED AS HAVING A MINIMUM OF 12" OF FRESH CONCRETE BELOW BAR.
4. FOR EPOXY COATED BARS, MULTIPLY SPLICE LENGTHS BY 1.5. THE PRODUCT OF THE TOP BAR MULTIPLIER AND EPOXY COATED BAR MULTIPLIER NEED NOT BE MORE THAN 1.7.
5. WHEN LAP SPLICING BARS OF DIFFERENT SIZES, THE LENGTH IS DETERMINED BY THE SMALLER BAR, BUT NOT TO BE LESS THAN THE CLASS A SPLICE LENGTH OF THE LARGER BAR.
6. FOR DEVELOPMENT LENGTHS AND SPLICES IN SLABS AND WALL WHERE CLEAR COVER TO REINFORCING IS LESS THAN d_b OR CLEAR SPACING IS LESS THAN $2d_b$, VALUES LISTED SHALL BE MULTIPLIED BY 1.5.

1 TENSION DEVELOPMENT AND SPLICE LENGTHS SCHEDULE
SCALE: 3/4" = 1'-0"

ISSUE/REVISIONS

#	DESCRIPTION	DATE

TYPICAL FOUNDATION DETAILS

WORLD HERITAGE CENTER
SAN ANTONIO, TX

DUNAWAY
118 Broadway Suite 201, San Antonio, Texas 78205
Tel. 210.297.2408
(TX REG. F-1145)

muñoz
1017 NORTH MAIN • SAN ANTONIO, TX 78212
O.210.349.1165 • F.210.525.1038 • MUNOZ.CO.COM

THIS DOCUMENT IS RELEASED FOR THE PURPOSE OF INTERIM REVIEW UNDER THE AUTHORITY OF NOLAN P. WOYNER, PE 128820 ON DECEMBER 1, 2021 . IT IS NOT TO BE USED FOR CONSTRUCTION, BIDDING, OR PERMIT PURPOSES.

JOB NO.	5675
DESIGNED BY:	Author
DRAWN BY:	Author
CHECKED BY:	Checker
DATE:	DECEMBER 1, 2021
SHEET:	S-003

DESIGN CRITERIA:

INTERNATIONAL BUILDING CODE 2018
WIND VELOCITY = 108 MPH (3-SEC)
EXPOSURE = B

NOTES:

1. VERIFY SIZE OF FRAME W/ MECH CONTRACTOR
2. VERIFY UNIT LOCATION ON SITE PRIOR TO FRAME FABRICATION
3. CONTRACTOR TO VERIFY UNIT WEIGHT WITH WEIGHT SHOWN ON PLAN

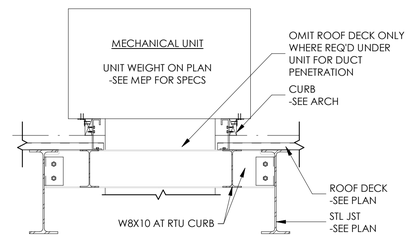

CROSS SECTION

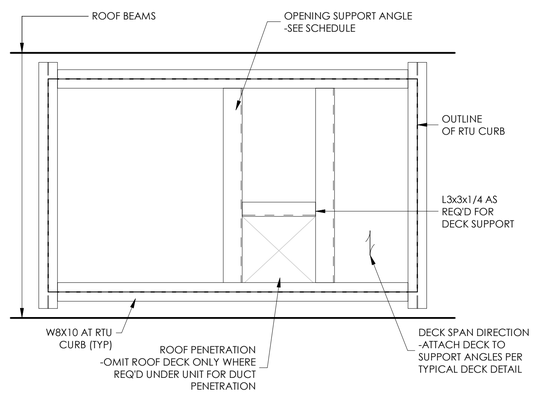

UNIT PARALLEL TO FRAMING

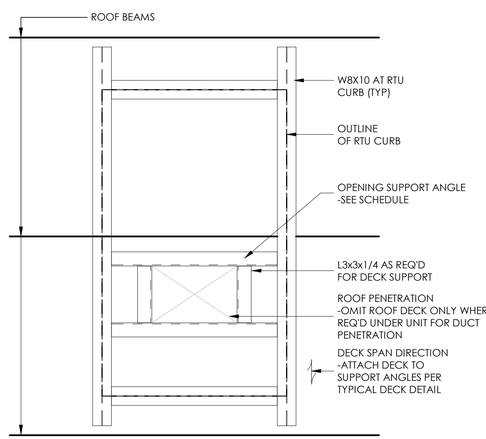

UNIT PERPENDICULAR TO FRAMING

OPENING SUPPORT ANGLE SCHEDULE	
MAX SPAN	OPENING SUPPORT ANGLE
6' -6"	L4X4X1/4
10' -0"	L5X5X5/16
12' -0"	L6X6X5/16

7 TYPICAL SUPPORT AT MECHANICAL UNIT DETAIL

SCALE: 3/4" = 1'-0"

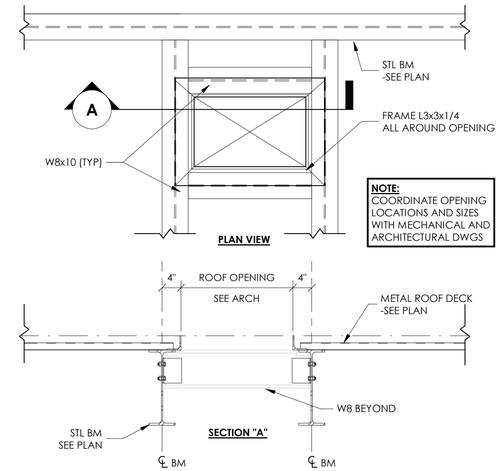

NOTE:
COORDINATE OPENING LOCATIONS AND SIZES WITH MECHANICAL AND ARCHITECTURAL DWGS

6 TYPICAL ROOF OPENING DETAIL

SCALE: 3/4" = 1'-0"

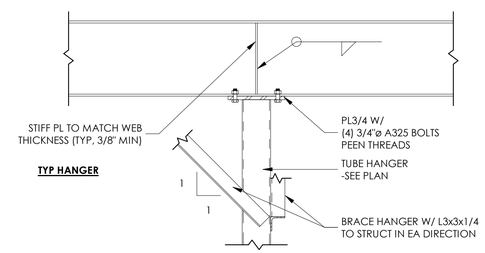

5 TYPICAL HANGER DETAIL

SCALE: 3/4" = 1'-0"

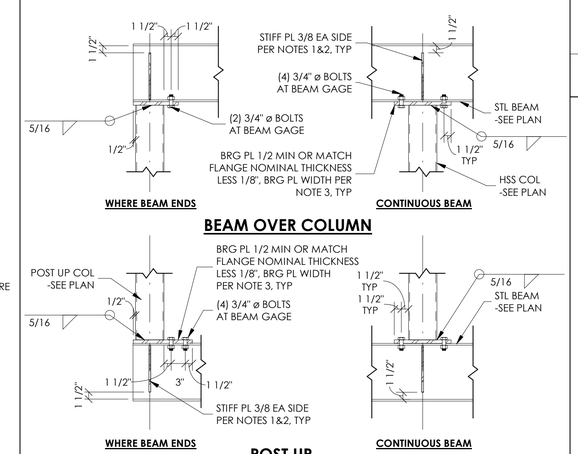

NOTES:
1. CHAMFER CORNERS AS REQUIRED AT BEAM "K" REGION.
2. AT INTERSECTING BEAMS, USE FULL DEPTH SHEAR TAB PER TYPICAL CONNECTION DETAIL.
3. BEARING PLATE WIDTH = BEAM FLANGE WIDTH. IF COLUMN IS WIDER THAN BEAM FLANGE, BEARING PLATE WIDTH = COLUMN WIDTH + 1".

4 CONTINUOUS BEAM AND POST UP DETAIL

SCALE: 3/4" = 1'-0"

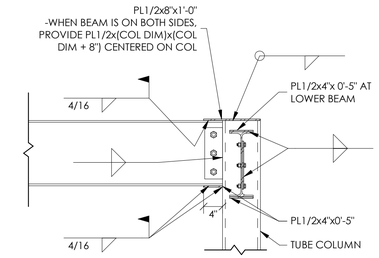

NOTE:
SEE 1/S-004 FOR REQ'D SHEAR PLATE AND BOLTS

3 BEAM TO COLUMN FLEXIBLE MOMENT CONNECTION DETAIL

SCALE: 3/4" = 1'-0"

NOTE:
WHERE HSS BEAM IS NOT CENTERED ON COLUMN, INCREASE ANGLE LENGTH AS REQUIRED.

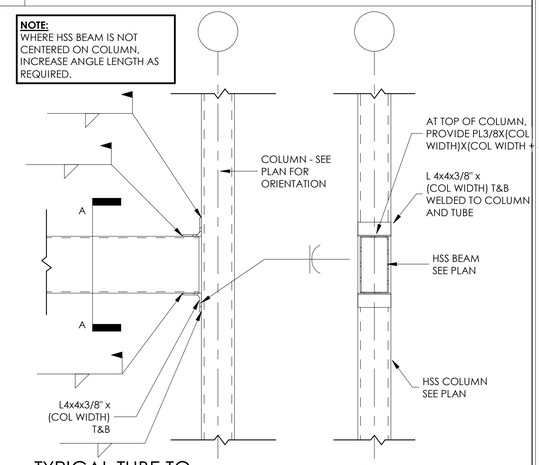

2 TYPICAL TUBE TO TUBE COLUMN CONNECTION DETAIL

SCALE: 3/4" = 1'-0"

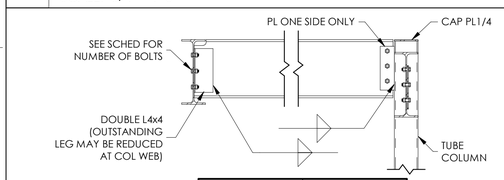

BEAM DEPTH	MIN. NO. 3/4"ø A325 BOLTS
8"	2
10"	2
12"	3
14"	3
16"	4
18"	5
21"	6
24"	6
27"	7
30"	8

NOTES:
1. PLATE THICKNESS SHALL BE 3/8" FOR CONNECTIONS UP TO 5 ROWS OF BOLTS.
2. PLATE THICKNESS SHALL BE 5/16" FOR CONNECTIONS WITH 6 ROWS OF BOLTS OR MORE.
3. SEE PLAN FOR LRFD BEAM REACTIONS. NUMBER OF BOLTS SHOWN IN TABLE ARE MINIMUMS. REFER TO STRUCTURAL STEEL NOTES FOR AISC CONNECTION DESIGN TABLES.

1 SIMPLE SHEAR CONNECTION DETAIL

SCALE: 3/4" = 1'-0"

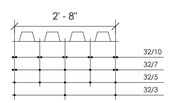

30NL-32 DECK

STEEL DECK ATTACHMENT PATTERNS

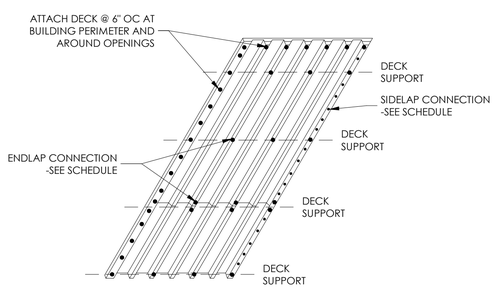

STEEL DECK ATTACHMENT DIAGRAM

ROOF DECK SCHEDULE							
DECK TYPE	GA	MIN Ix (in^4/ft)	END LAP CONNECTION [1]	END LAP PATTERN	SIDE LAP CONNECTION	NUMBER OF SIDELAPS	ALLOWABLE SHEAR (PLF)
3NL	20	0.886	5/8"ø PW	32/5	#10 SCREW	3	344
			HILTI X-HSN 24	32/5	S-SLC 01 M HWH	3	194

NOTE:
1. HILTI X-HSN 24 SHALL BE PROVIDED AT JOIST AND STEEL BEAMS WITH FLANGE THICKNESS LESS THAN 3/8". PROVIDE HILTI X-ENP-19-L15 AT STEEL BEAMS WITH FLANGE THICKNES 3/8" OR GREATER.
2. AT SPANDREL BEAMS OR DECK SUPPORT ANGLES, AND FOR A 10'-0" SQUARE AREA AT CORNERS, CONNECT DECK TO ALL SUPPORTS AT 6" OC.

10 TYPICAL STEEL ROOF DECK ATTACHMENT

SCALE: 1/2" = 1'-0"

#	ISSUE/REVISIONS DESCRIPTION	DATE

TYPICAL FRAMING DETAILS

WORLD HERITAGE CENTER
SAN ANTONIO, TX

DUNAWAY
118 Broadway Suite 201, San Antonio, Texas 78205
O: 210.297.2408
(TX REG. F-1145)

muñoz
1017 NORTH MAIN • SAN ANTONIO, TX 78212
O:210.349.1165 • F:210.525.1038 • MUNOZ.CO.COM

THIS DOCUMENT IS RELEASED FOR THE PURPOSE OF INTERIM REVIEW UNDER THE AUTHORITY OF NOLAN P. WOYNER, PE 128820 ON DECEMBER 1, 2021 , IT IS NOT TO BE USED FOR CONSTRUCTION, BIDDING, OR PERMIT PURPOSES.

JOB NO.	5675
DESIGNED BY:	KK
DRAWN BY:	KK
CHECKED BY:	NW
DATE:	DECEMBER 1, 2021
SHEET:	S-004

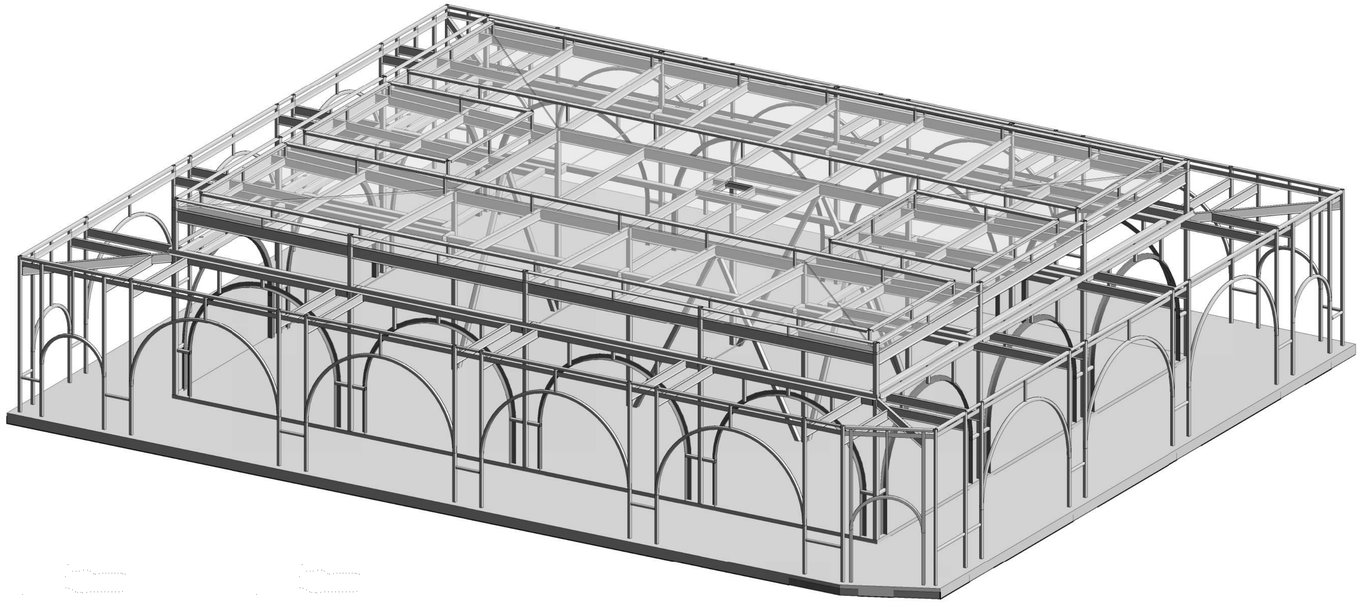

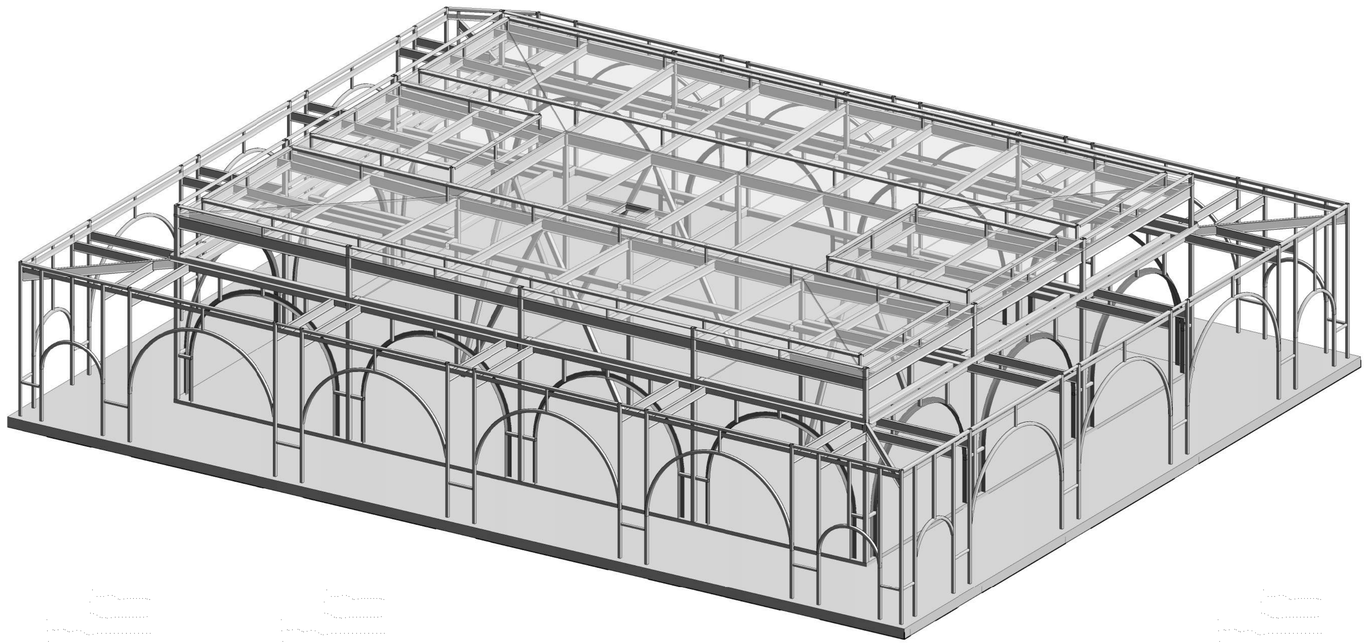

NOTE:
ISOMETRIC VIEWS ARE PROVIDED FOR ILLUSTRATIVE PURPOSES ONLY. STRUCTURAL PLAN SHEETS AND DETAILS GOVERN ANY DATA OBTAINED FROM ISOMETRIC VIEWS.

ISSUE/REVISIONS

#	DESCRIPTION	DATE

ISOMETRIC VIEW

DUNAWAY
118 Broadway Suite 201, San Antonio, Texas 78205
Tel: 210.287.2049
(TX REG. F-1114)

muñoz
1017 NORTH MAIN • SAN ANTONIO, TX 78212
O 210.349.1165 • F 210.525.1038 • MUNOZ.CO.COM

WORLD HERITAGE CENTER
SAN ANTONIO, TX

THIS DOCUMENT IS RELEASED FOR THE PURPOSE OF INTERIM REVIEW UNDER THE AUTHORITY OF NOLAN P. WOYNER, PE 128820 ON DECEMBER 1, 2021 . IT IS NOT TO BE USED FOR CONSTRUCTION, BIDDING, OR PERMIT PURPOSES.

JOB NO.	5675
DESIGNED BY:	KK
DRAWN BY:	KK
CHECKED BY:	NW
DATE:	DECEMBER 1, 2021
SHEET:	S-005

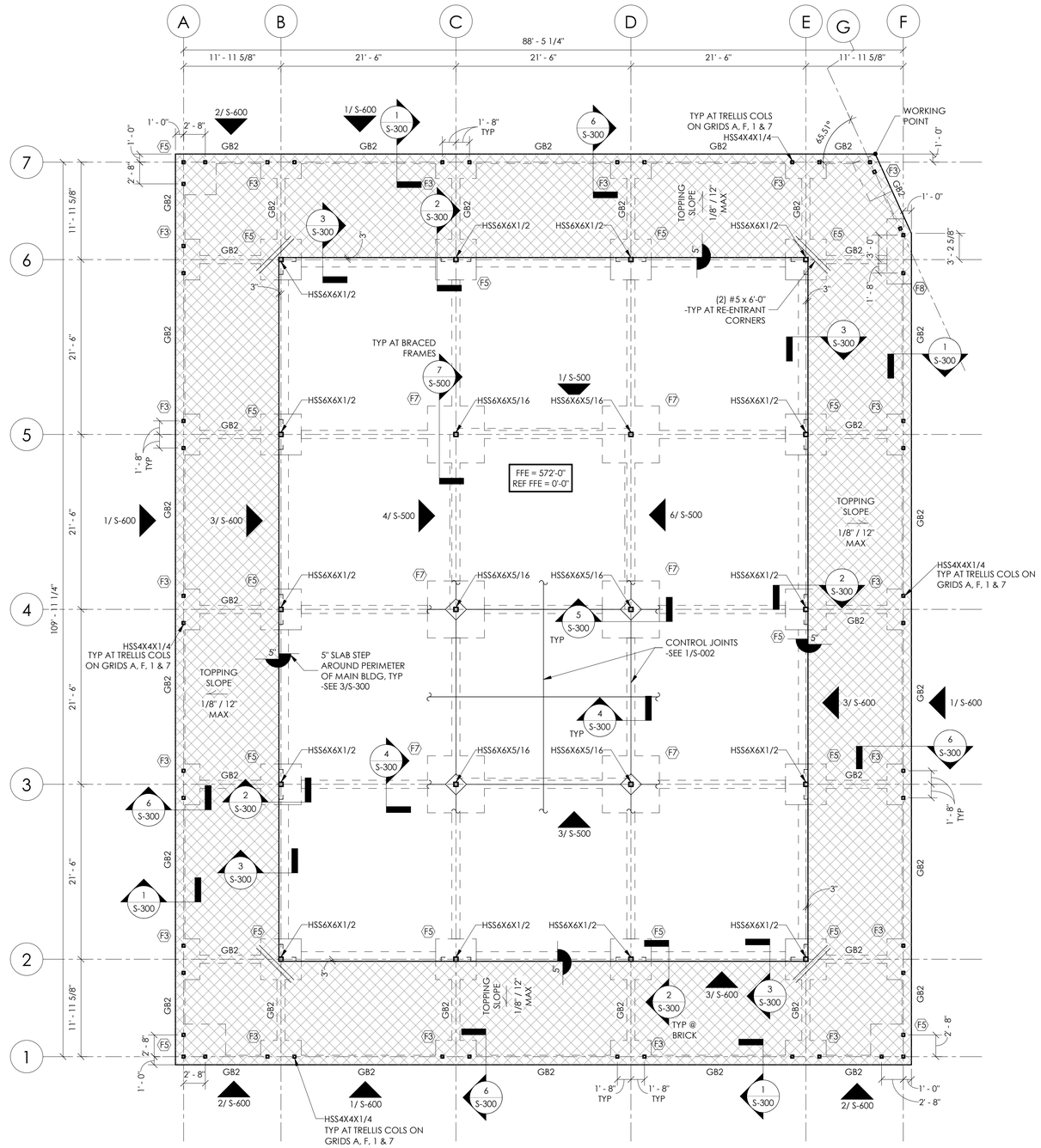

FOUNDATION PLAN
SCALE: 1/8" = 1'-0"

SLAB ON GRADE NOTE:
5" THICK CONCRETE SLAB ON GRADE W/ #3 @ 14" OC EA WAY ON 3" HIGH CHAIRS @ 42" OC EA WAY. PLACE SLAB ON 15 MIL PLASTIC WATER VAPOR BARRIER OVER COMPACTED SELECT FILL -SEE SOIL REPORT

SPREAD FOOTING SCHEDULE

MARK	LENGTH	WIDTH	THICKNESS	BTM REINFORCING
F3	5'-0"	3'-0"	2'-7" *	#5 @ 6" OC EA WAY
F5	5'-0"	5'-0"	2'-7"	(11) #5 EA WAY
F7	7'-0"	7'-0"	2'-2"	(13) #5 EA WAY
F8	8'-0"	3'-0"	2'-7" *	#5 @ 6" OC EA WAY

(*) BOTTOM OF EXTERIOR FOOTINGS SHALL BE 36" MIN BELOW FINAL ADJACENT GRADE PER FOUNDATION DETAILS

INDICATES TOPPING SLAB OVER STRUCTURAL SLAB PER ARCH

INDICATES VERTICAL BRACING SEE ELEVATIONS S-500 (X/S.X.X)

INDICATES FLOOR DRAIN -SEE 9/S-002 (FD)

PLAN LEGEND

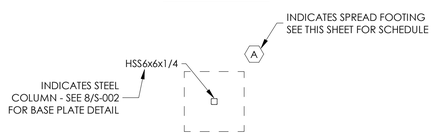

FOOTING LEGEND

ISSUE/REVISIONS

#	DESCRIPTION	DATE

DUNAWAY
118 Broadway Suite 201, San Antonio, Texas 78205
O 210.297.2408
(TX REG. F-1114)

muñoz
1017 NORTH MAIN • SAN ANTONIO, TX 78212
O.210.349.1165 • F.210.525.1038 • MUNOZ.CO.COM

FOUNDATION PLAN

WORLD HERITAGE CENTER
SAN ANTONIO, TX

THIS DOCUMENT IS RELEASED FOR THE PURPOSE OF INTERIM REVIEW UNDER THE AUTHORITY OF NOLAN P. WOYNER, PE 128820 ON DECEMBER 1, 2021 . IT IS NOT TO BE USED FOR CONSTRUCTION, BIDDING, OR PERMIT PURPOSES.

JOB NO.	5675
DESIGNED BY:	KK
DRAWN BY:	KK
CHECKED BY:	NW
DATE:	DECEMBER 1, 2021
SHEET:	S-100

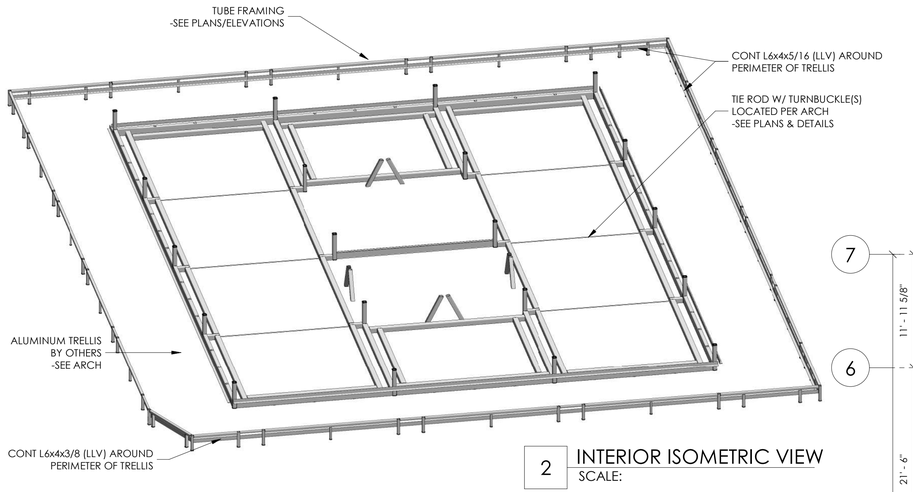

2 INTERIOR ISOMETRIC VIEW
SCALE:

NOTE:
ISOMETRIC VIEWS ARE PROVIDED FOR ILLUSTRATIVE PURPOSES ONLY. STRUCTURAL PLAN SHEETS AND DETAILS GOVERN ANY DATA OBTAINED FROM ISOMETRIC VIEWS.

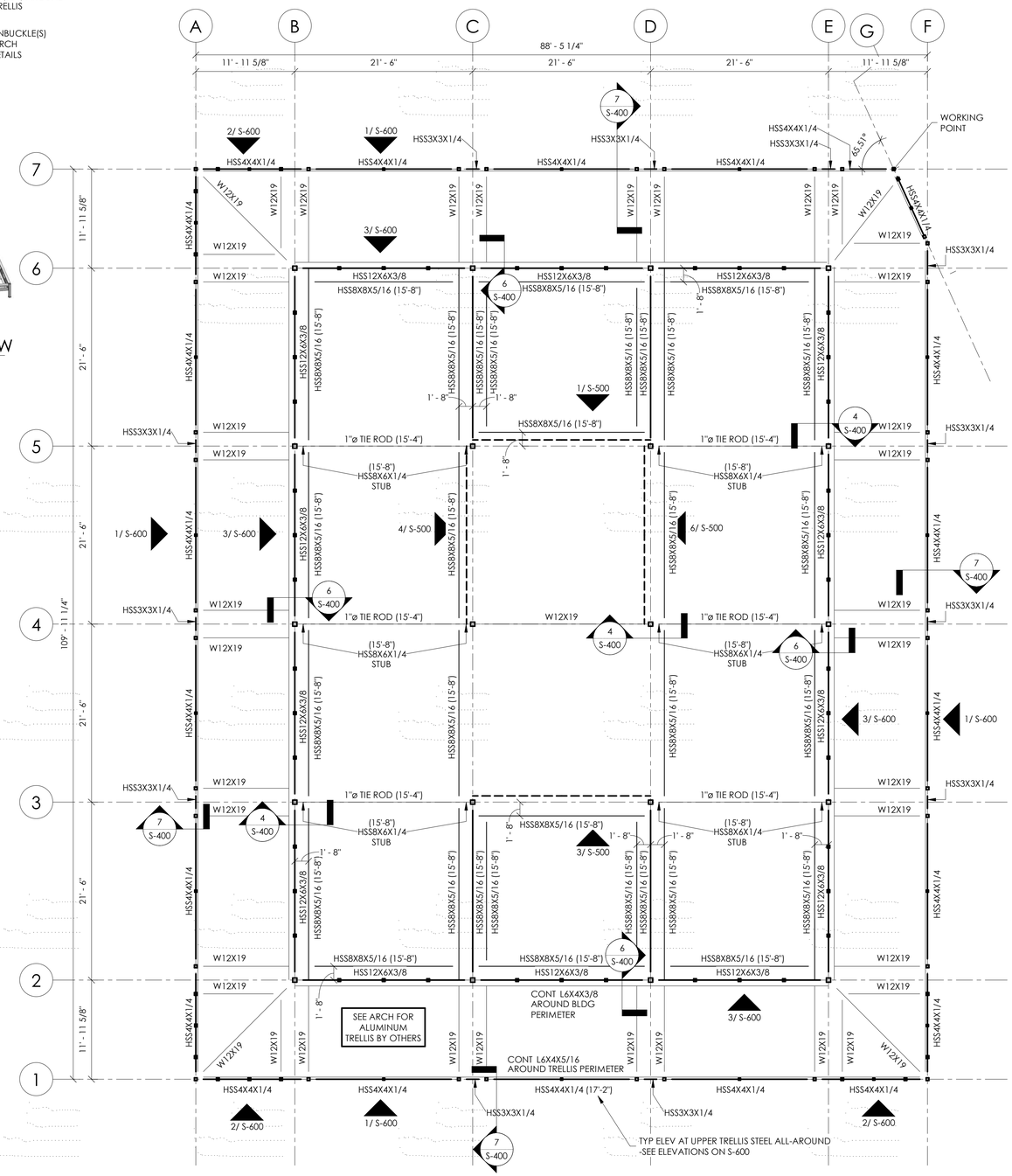

DOME SUPPORT & TRELLIS FRAMING PLAN
SCALE: 1/8" = 1'-0"

TOP OF STEEL NOTE:
TOP OF STEEL = 16'-0", TYP U.N.O. REFER TO FRAMING ELEVATIONS ON SHEET S-600 FOR ADDITIONAL INFORMATION.

X/S.X.X INDICATES VERTICAL BRACING -SEE ELEVATIONS S-500

PLAN LEGEND

INDICATES ELEVATION ABOVE REF FFE = 0'-0"

W16x31 (-1'-0")

BEAM LEGEND

#	DESCRIPTION	DATE

ISSUE/REVISIONS

DOME SUPPORT & TRELLIS PLAN

WORLD HERITAGE CENTER
SAN ANTONIO, TX

DUNAWAY
118 Broadway Suite 201, San Antonio, Texas 78205
P 210.297.2408
(TX REG. F-1114)

muñoz
1017 NORTH MAIN • SAN ANTONIO, TX 78212
O 210.349.1165 • F 210.525.1038 • MUNOZ-CO.COM

THIS DOCUMENT IS RELEASED FOR THE PURPOSE OF INTERIM REVIEW UNDER THE AUTHORITY OF NOLAN P. WOYNER, PE 128820 ON DECEMBER 1, 2021 . IT IS NOT TO BE USED FOR CONSTRUCTION, BIDDING, OR PERMIT PURPOSES.

JOB NO.	5675
DESIGNED BY:	Author
DRAWN BY:	Author
CHECKED BY:	Checker
DATE:	DECEMBER 1, 2021
SHEET:	S-200

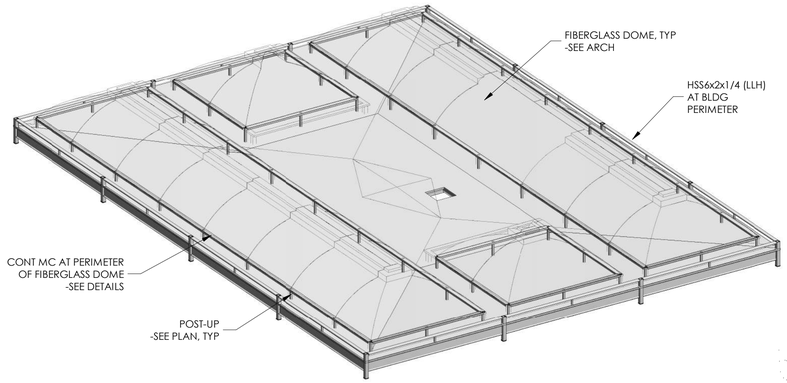

2 ROOF ISOMETRIC VIEW
SCALE:

NOTE:
ISOMETRIC VIEWS ARE PROVIDED FOR ILLUSTRATIVE PURPOSES ONLY. STRUCTURAL PLAN SHEETS AND DETAILS GOVERN ANY DATA OBTAINED FROM ISOMETRIC VIEWS.

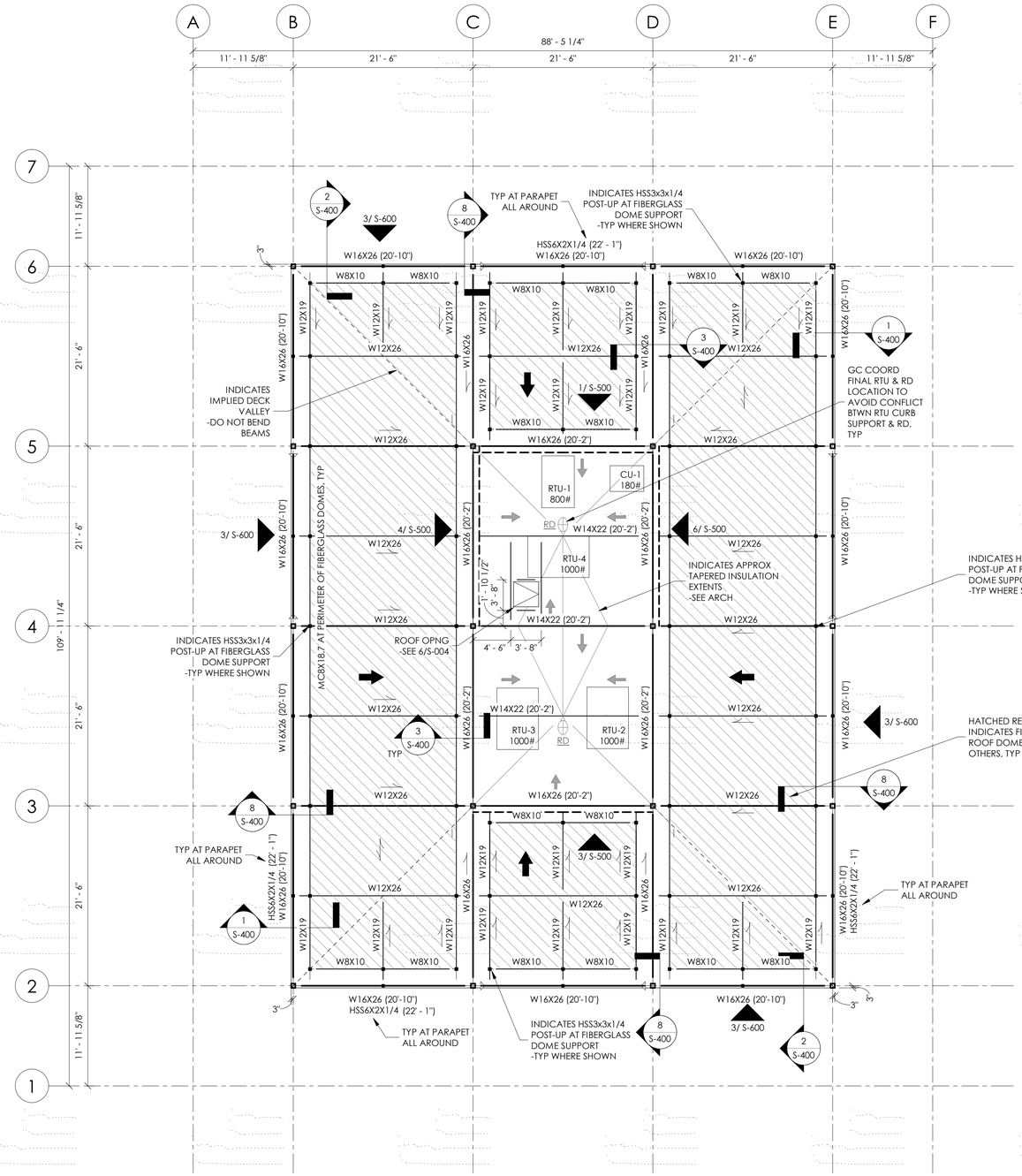

ROOF DECK:
RIGID INSULATION BOARD ON GALVANIZED 3" DEEP, 20 GA, TYPE 'NL' METAL DECK
-SEE 10/S-004

TOP OF STEEL NOTE:
TOP OF STEEL ELEVATION ABOVE REFERENCED FINISHED FLOOR ELEVATION IS SHOWN ON PLAN. TOP OF STEEL ELEVATION EQUALS BOTTOM OF DECK ELEVATION.

RD — INDICATES ROOF DRAIN

INDICATES ROOF DECK SPAN DIRECTION

INDICATES ROOF DECK SLOPE DIRECTION

X/S.X.X — INDICATES VERTICAL BRACING -SEE ELEVATIONS S-500

PLAN LEGEND

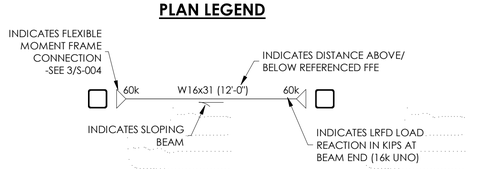

BEAM LEGEND

ROOF FRAMING PLAN
SCALE: 1/8" = 1'-0"

#	DESCRIPTION	DATE

ISSUE/REVISIONS

ROOF FRAMING PLAN

WORLD HERITAGE CENTER
SAN ANTONIO, TX

DUNAWAY
118 Broadway Suite 201, San Antonio, Texas 78205
O 210.297.2408
(TX REG. F-1145)

muñoz
1017 NORTH MAIN • SAN ANTONIO, TX 78212
O 210.349.1165 • F 210.525.1038 • MUNOZ-CO.COM

THIS DOCUMENT IS RELEASED FOR THE PURPOSE OF INTERIM REVIEW UNDER THE AUTHORITY OF NOLAN P. WOYNER, PE 128820 ON DECEMBER 1, 2021 . IT IS NOT TO BE USED FOR CONSTRUCTION, BIDDING, OR PERMIT PURPOSES.

JOB NO.	5675
DESIGNED BY:	KK
DRAWN BY:	KK
CHECKED BY:	NW
DATE:	DECEMBER 1, 2021
SHEET:	S-201

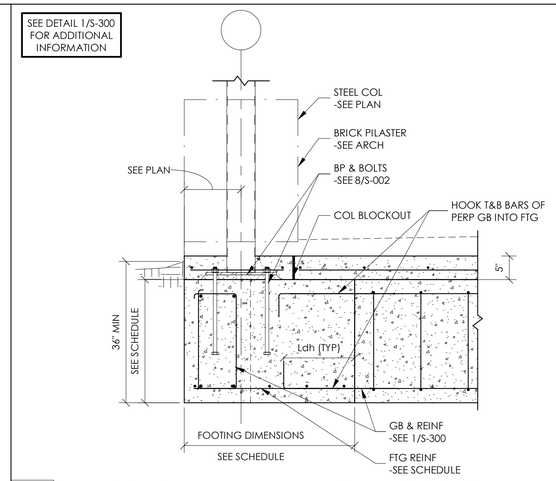

6 EXTERIOR GRADE BEAM DETAIL AT FOOTING
SCALE: 3/4" = 1'-0"

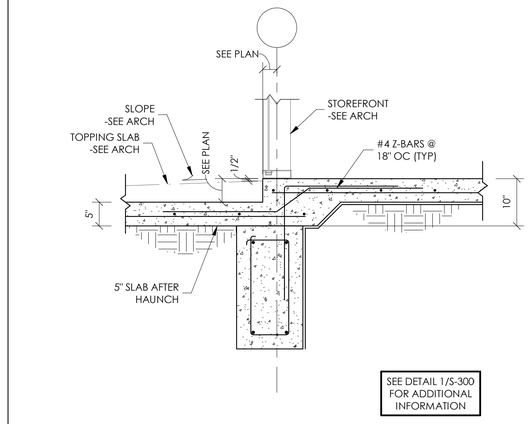

3 EXTERIOR GRADE BEAM AT STOREFRONT
SCALE: 3/4" = 1'-0"

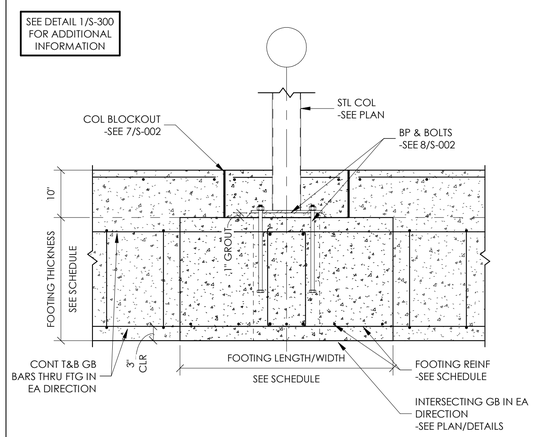

5 INTERIOR GRADE BEAM AT COLUMN
SCALE: 3/4" = 1'-0"

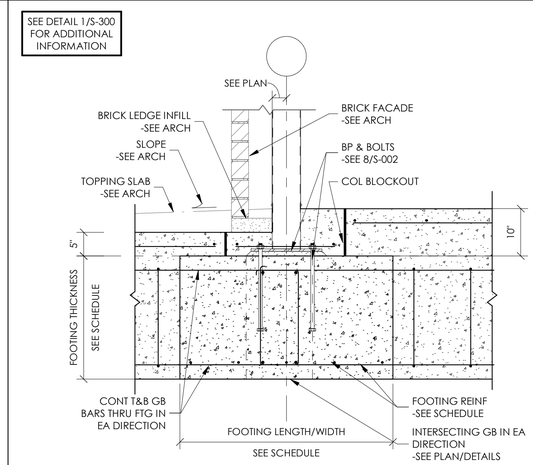

2 GRADE BEAM AT FOOTING
SCALE: 3/4" = 1'-0"

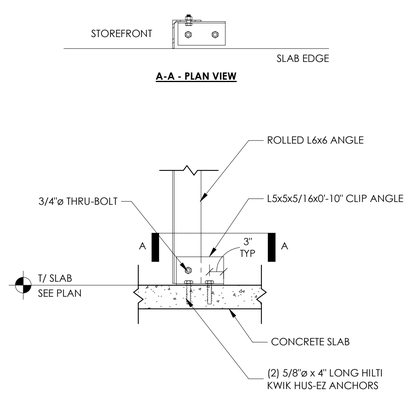

7 ROLLED ANGLE BASE CONNECTION
SCALE: 3/4" = 1'-0"

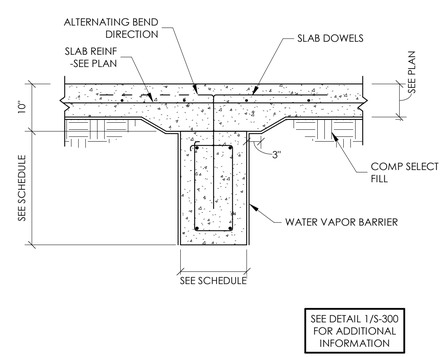

4 INTERIOR GRADE BEAM DETAIL
SCALE: 3/4" = 1'-0"

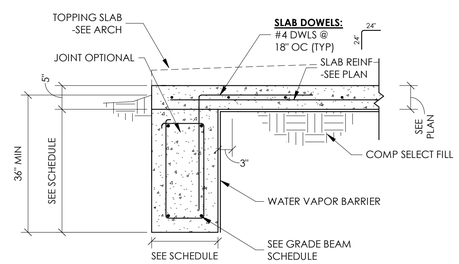

GRADE BEAM SCHEDULE				
MARK	WIDTH	DEPTH	REINFORCEMENT	FACE BARS
GB1	14"	26"	(2) #7 T&B #3 @ 10"OC	N/A
GB2	14"	31"	(2) #7 T&B #3 @ 10"OC	N/A

SCHEDULE NOTES:
1. SEE PLAN FOR GRADE BEAM MARKS.
2. ALL GRADE BEAMS ARE MARK **GB1**, UNO.
3. WHERE A MARK IS SHOWN ON PLAN, THE GRADE BEAM REINFORCEMENT SHALL EXTEND FROM SUPPORT TO SUPPORT

1 EXTERIOR GRADE BEAM DETAIL
SCALE: 3/4" = 1'-0"

#	DESCRIPTION	DATE

ISSUE/REVISIONS

FOUNDATION DETAILS

WORLD HERITAGE CENTER
SAN ANTONIO, TX

DUNAWAY
118 Broadway Suite 201, San Antonio, Texas 78205
(210) 297-2408
(TX REG. F-1114)

muñoz
1017 NORTH MAIN • SAN ANTONIO, TX 78212
O.210.349.1165 • F.210.525.1038 • MUNOZ.CO.COM

THIS DOCUMENT IS RELEASED FOR THE PURPOSE OF INTERIM REVIEW UNDER THE AUTHORITY OF NOLAN P. WOYNER, PE 128820 ON DECEMBER 1, 2021 . IT IS NOT TO BE USED FOR CONSTRUCTION, BIDDING, OR PERMIT PURPOSES.

JOB NO.	5675
DESIGNED BY:	KK
DRAWN BY:	KK
CHECKED BY:	NW
DATE:	DECEMBER 1, 2021
SHEET:	S-300

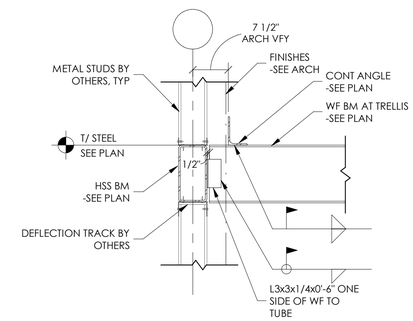

6 WF BEAM TO HSS BEAM DETAIL
SCALE: 3/4" = 1'-0"

NOTE:

POSTS & CHANNELS AT FIBERGLASS DOME SUPPORT NOT SHOWN FOR CLARITY. SEE PLAN & DETAILS 1/S-400 & 2/S-400 FOR MORE INFO.

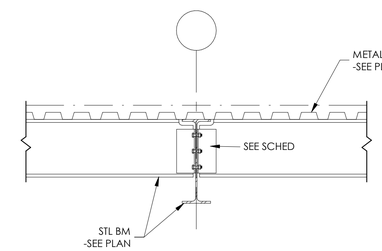

3 INTERIOR GIRDER BEAM DETAIL
SCALE: 3/4" = 1'-0"

SEE DETAILS 1/S-400 & 2/S-400 FOR INFO NOT SHOWN.

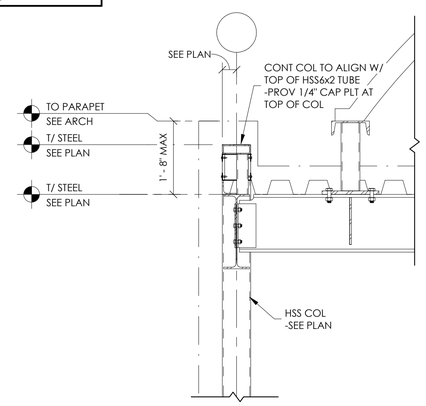

8 EDGE DETAIL AT ROOF AT COLUMN
SCALE: 3/4" = 1'-0"

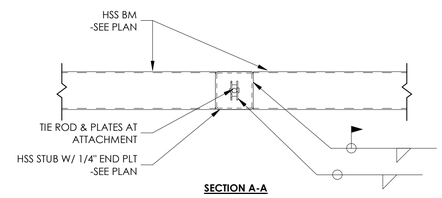

SECTION A-A

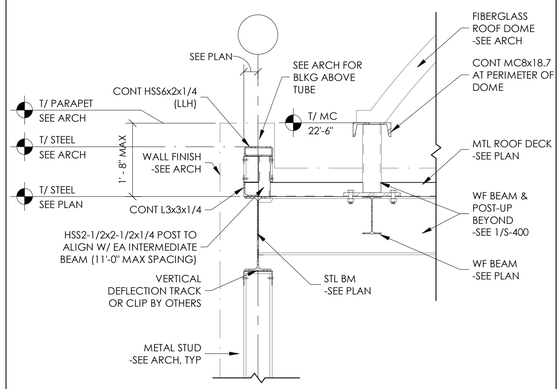

2 EDGE DETAIL AT ROOF
SCALE: 3/4" = 1'-0"

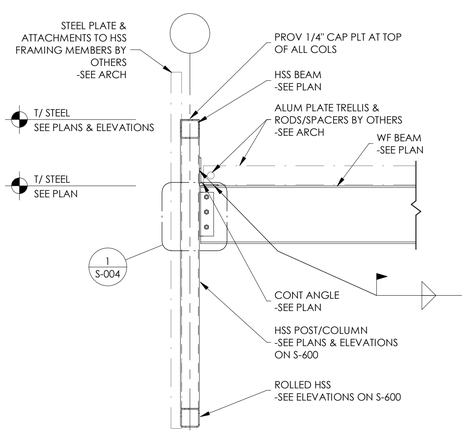

7 DETAIL AT EDGE OF TRELLIS
SCALE: 3/4" = 1'-0"

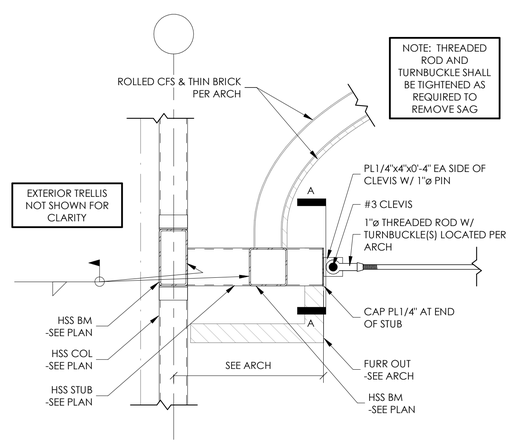

4 EDGE DETAIL AT ROOF
SCALE: 3/4" = 1'-0"

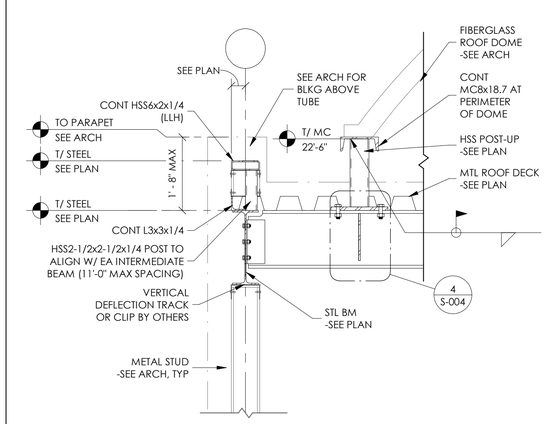

1 EDGE DETAIL AT ROOF
SCALE: 3/4" = 1'-0"

#	DESCRIPTION	DATE

ISSUE/REVISIONS

FRAMING DETAILS

WORLD HERITAGE CENTER
SAN ANTONIO, TX

DUNAWAY
118 Broadway Suite 201, San Antonio, Texas 78205
(210) 297-2408
(TX REG. F-1145)

muñoz
1017 NORTH MAIN • SAN ANTONIO, TX 78212
O.210.349.1165 • F.210.525.1038 • MUNOZ.CO.COM

THIS DOCUMENT IS RELEASED FOR THE PURPOSE OF INTERIM REVIEW UNDER THE AUTHORITY OF NOLAN P. WOYNER, PE 128820 ON DECEMBER 1, 2021 . IT IS NOT TO BE USED FOR CONSTRUCTION, BIDDING, OR PERMIT PURPOSES.

JOB NO.	5675
DESIGNED BY:	KK
DRAWN BY:	KK
CHECKED BY:	NW
DATE:	DECEMBER 1, 2021
SHEET:	S-400

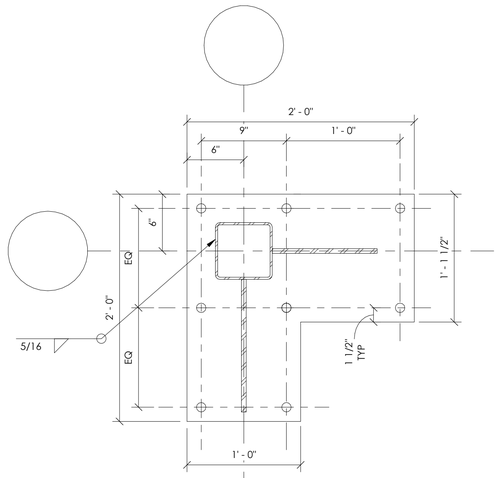

CONDITION AT INTERSECTING BRACES

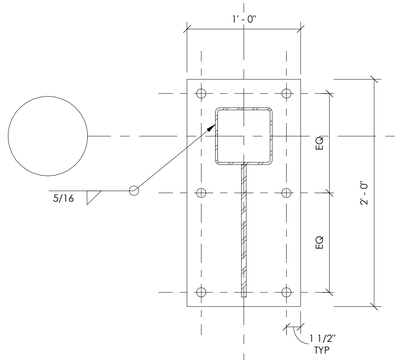

CONDITION AT SINGLE BRACE

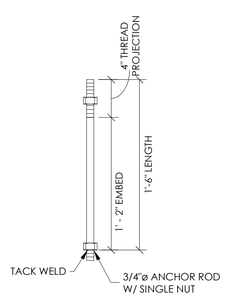

10 BRACED FRAME COLUMN BASEPLATE DETAIL
SCALE: 1 1/2" = 1'-0"

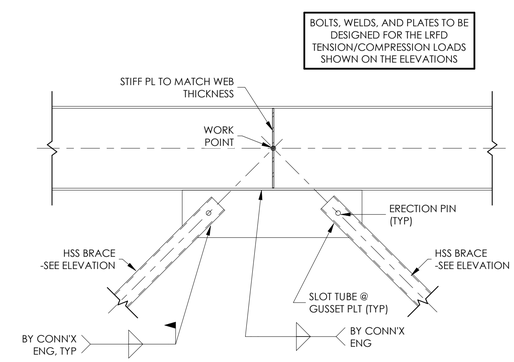

8 DETAIL AT TUBE BRACING
SCALE: 3/4" = 1'-0"

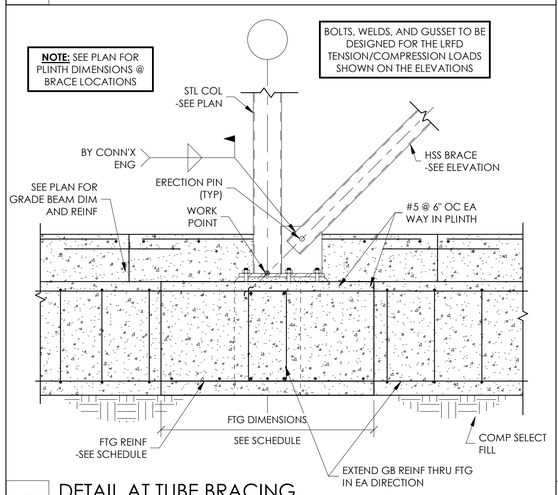

7 DETAIL AT TUBE BRACING
SCALE: 3/4" = 1'-0"

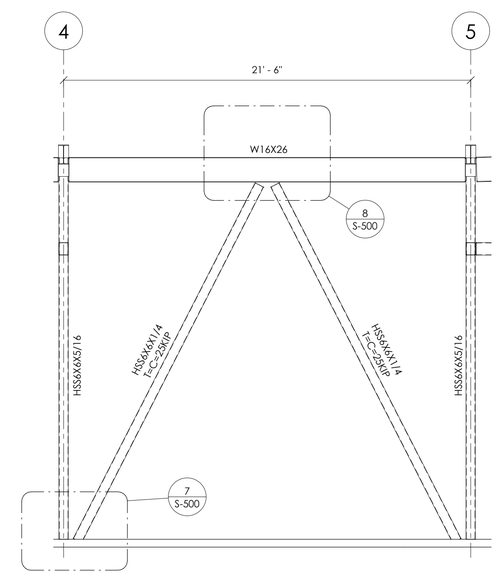

6 BRACED FRAME ELEVATION - GRID D
SCALE: 1/4" = 1'-0"

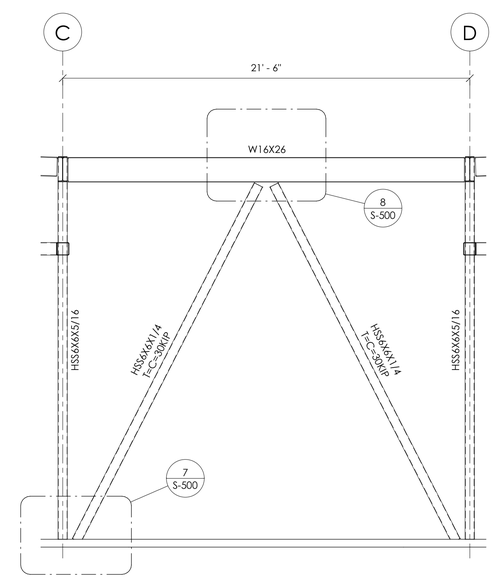

3 BRACED FRAME ELEVATION - GRID 3
SCALE: 1/4" = 1'-0"

NOTE: REACTIONS SHOWN ARE LRFD FACTORED REACTIONS. TYPICAL ALL ELEVATIONS.

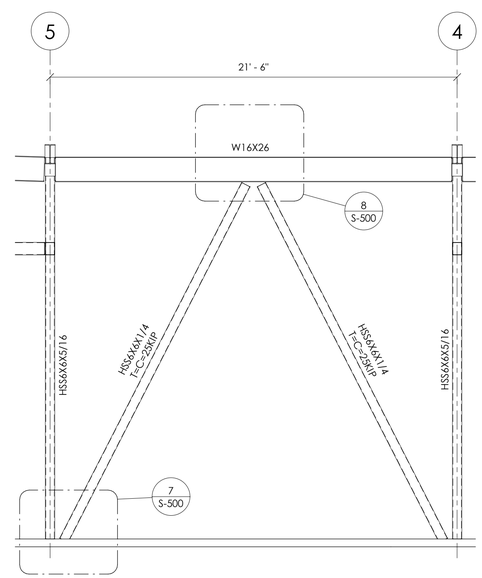

4 BRACED FRAME ELEVATION - GRID C
SCALE: 1/4" = 1'-0"

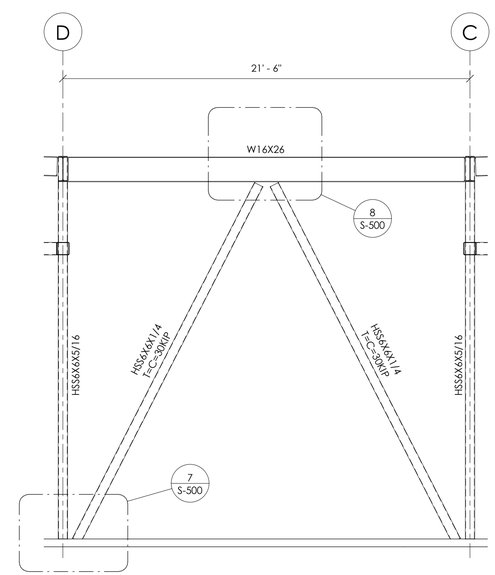

1 BRACED FRAME ELEVATION - GRID 5
SCALE: 1/4" = 1'-0"

#	DESCRIPTION	DATE

ISSUE/REVISIONS

BRACED FRAME ELEVATIONS

WORLD HERITAGE CENTER
SAN ANTONIO, TX

DUNAWAY
118 Broadway Suite 201, San Antonio, Texas 78205
O: 210.297.2408
(TX REG. F-1114)

muñoz
1017 NORTH MAIN • SAN ANTONIO, TX 78212
O:210.349.1165 • F:210.525.1038 • MUNOZ.CO.COM

THIS DOCUMENT IS RELEASED FOR THE PURPOSE OF INTERIM REVIEW UNDER THE AUTHORITY OF NOLAN P. WOYNER, PE 128820 ON DECEMBER 1, 2021 . IT IS NOT TO BE USED FOR CONSTRUCTION, BIDDING, OR PERMIT PURPOSES.

JOB NO.	5675
DESIGNED BY:	KK
DRAWN BY:	KK
CHECKED BY:	NW
DATE:	DECEMBER 1, 2021
SHEET:	S-500

NOTES:

1) ALL STEEL SHALL BE HOT-DIP GALVANIZED OR PRIMED/PAINTED W/ CORROSION-RESISTANT MATERIALS PER ARCH.

2) ALL CONNX BTWN POSTS/BEAMS & ANGLES SHALL BE FULLY-WELDED.

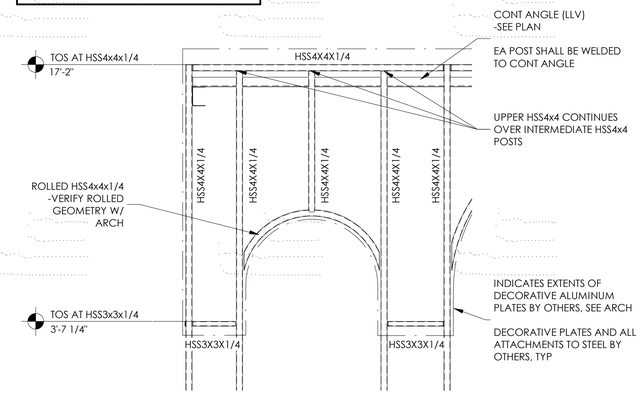

NOTE: ELEVATION SHALL BE CONSIDERED TYPICAL. SIMILAR CONDITIONS EXIST AT CORNER BAYS ALONG GRIDS 1, A, F, AND 7.

2 TYPICAL ELEVATION AT TRELLIS CORNER
SCALE: 1/4" = 1'-0"

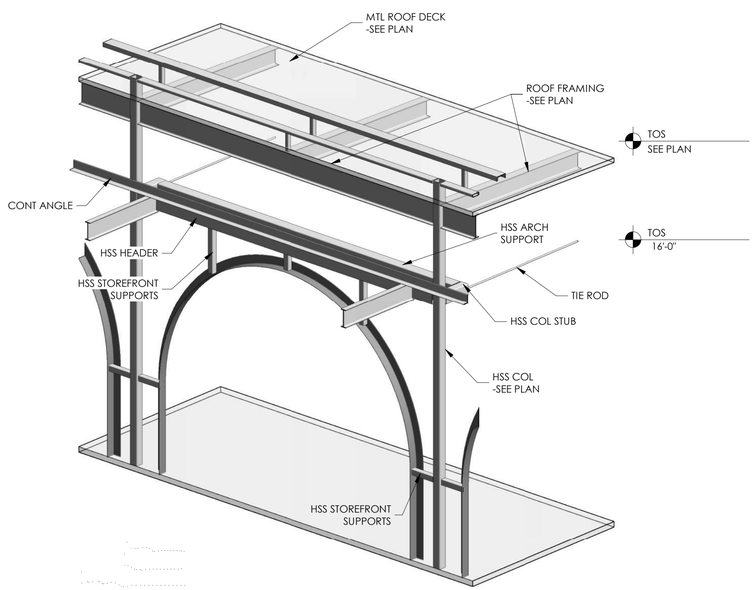

5 ISOMETRIC - TYPICAL STOREFRONT
SCALE:

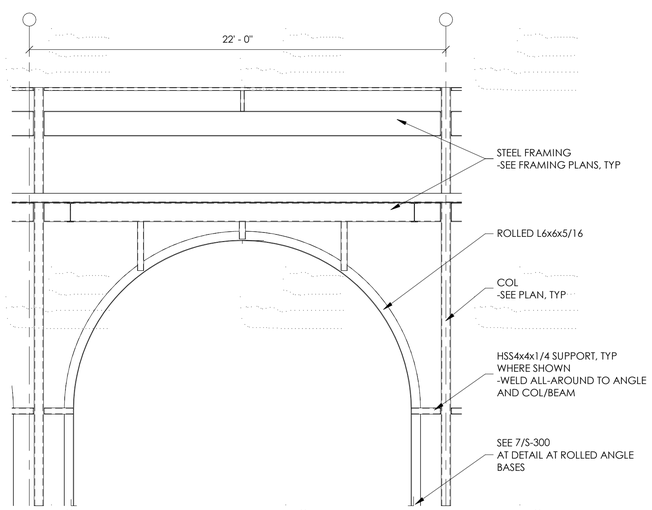

NOTE: ELEVATION SHALL BE CONSIDERED TYPICAL. SIMILAR CONDITIONS EXIST AT ALL BAYS ALONG GRIDS 2, 6, B, AND E.

3 TYPICAL ELEVATION AT STOREFRONT
SCALE: 1/4" = 1'-0"

NOTES:

1) ALL STEEL SHALL BE HOT-DIP GALVANIZED OR PRIMED/PAINTED W/ CORROSION-RESISTANT MATERIALS PER ARCH.

2) ALL CONNX BTWN POSTS/BEAMS & ANGLES SHALL BE FULLY-WELDED.

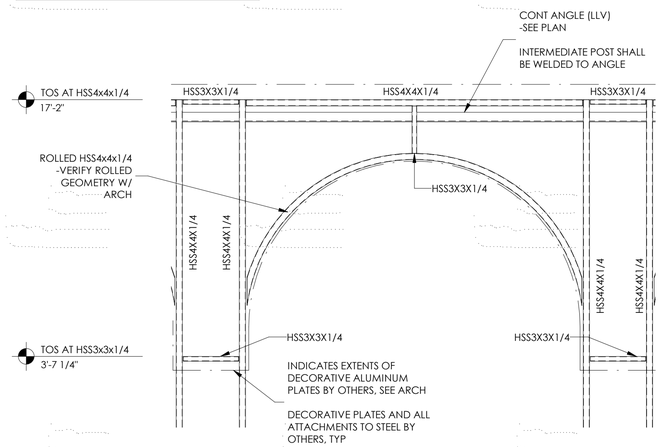

NOTE: ELEVATION SHALL BE CONSIDERED TYPICAL. SIMILAR CONDITIONS EXIST AT ALL BAYS ALONG GRIDS 1, 7, A, AND F.

1 TYPICAL ELEVATION AT TRELLIS
SCALE: 1/4" = 1'-0"

ISSUE/REVISIONS		
#	DESCRIPTION	DATE

FRAMING ELEVATIONS

DUNAWAY
118 Broadway Suite 201 San Antonio, Texas 78205
(210) 297-2408
(TX REG. F-1145)

muñoz
1017 NORTH MAIN • SAN ANTONIO, TX 78212
O.210.349.1165 • F.210.525.1038 • MUNOZ.CO.COM

WORLD HERITAGE CENTER
SAN ANTONIO, TX

THIS DOCUMENT IS RELEASED FOR THE PURPOSE OF INTERIM REVIEW UNDER THE AUTHORITY OF NOLAN P. WOYNER, PE 128820 ON DECEMBER 1, 2021 . IT IS NOT TO BE USED FOR CONSTRUCTION, BIDDING, OR PERMIT PURPOSES.

JOB NO.	5675
DESIGNED BY:	Author
DRAWN BY:	Author
CHECKED BY:	Checker
DATE:	DECEMBER 1, 2021
SHEET:	S-600

MECHANICAL SYMBOLS AND ABBREVIATIONS

(NOT ALL OF THE SYMBOLS SHOWN MAY BE USED ON THE PROJECT.)

GENERAL SYMBOLS

- EXISTING, TO REMAIN
- NEW WORK
- DEMOLITION
- EQUIPMENT, NEW
- KEYED MECHANICAL NOTE - NEW WORK (EX: #1)
- KEYED MECHANICAL NOTE - DEMOLITION WORK (EX: #1)
- PHOTOGRAPH REFERENCE (EX: #1)
- AHU-1 — EQUIPMENT TAG - (EX. AIR HANDLER UNIT NO.1)
- 1 / M2.1 — DETAIL NO.1 SHEET NO. M-2.1
- THERMOSTAT
- TEMPERATURE SENSOR
- HUMIDISTAT
- HUMIDITY SENSOR
- PUSHBUTTON CONTROL
- CONNECT TO EXISTING
- LIMIT OF DEMOLITION

PIPING SYMBOLS

SYMBOL	DESCRIPTION
	HEATING
LPS	LOW PRESSURE STEAM
LPC	LOW PRESSURE CONDENSATE
PC	PUMPED CONDENSATE
FOD	FUEL OIL DISCHARGE
FOG	FUEL OIL GAUGE
FOR	FUEL OIL RETURN
FOS	FUEL OIL SUPPLY
FOV	FUEL OIL TANK VENT
HWR	HOT WATER RETURN
HWS	HOT WATER SUPPLY
A	COMPRESSED AIR
VAC	VACUUM (AIR)
	AIR CONDITIONING & REFRIGERATION
RL	REFRIDERANT LIQUID
RS	REFRIDERANT SUCTION
CHR	CHILLED WATER RETURN
CHS	CHILLED WATER SUPPLY
HCR	HOT/CHILLED WATER RETURN
HCS	HOT/CHILLED WATER SUPPLY
CWR	CONDENSER WATER RETURN
CWS	CONDENSER WATER SUPPLY
CD	CONDENSATE DRAIN
D	DRAIN
HPWS	HEAT PUMP WATER SUPPLY
HPWR	HEAT PUMP WATER RETURN

PIPING SYMBOLS

- BUSHING FITTING
- CAP FITTING
- CONNECTION, BOTTOM FITTING
- CONNECTION, TOP FITTING
- CROSS FITTING
- ELBOW, 90 DEG. FITTING
- ELBOW, 45 DEG. FITTING
- ELBOW, TURN UP
- ELBOW, TURN DOWN
- ELBOW, BASE
- LATERAL FITTING
- REDUCER, CONCENTRIC
- REDUCER, ECCENTRIC STRAIGHT INVERT
- REDUCER, ECCENTRIC STRAIGHT CROWN
- TEE
- TEE OUTLET UP
- TEE OUTLET DOWN
- UNION
- AV — AIR VENT, AUTOMATIC
- MV — AIR VENT, MANUAL
- ALIGNMENT GUIDE
- ANCHOR, INTERMEDIATE
- ANCHOR, MAIN
- BALL JOINT
- EXPANSION JOINT
- EXIPANSION LOOP
- FLEXIBLE CONNECTOR
- FLOW METER
- FS — FLOW SWITCH
- HEAT EXCHANGER, LIQUID
- R — PITCH OF PIPE RISE (R), DROP (D)
- P — PRESSURE GAUGE AND COCK
- PS — PRESSURE SWITCH
- CW-1 — PUMP (INDICATED USE)
- STRAINER
- STRAINER, BLOW OFF
- THERMOMETER
- THERMOMETER WELL, ONLY
- F&T — TRAPS, STEAM (INDICATE TYPE)
- BALL VALVE
- BUTTERFLY VALVE
- CHECK VALVE
- CIRCUIT BALANCING VALVE, MANUAL
- CIRCUIT BALANCING VALVE, AUTOMATIC
- GATE VALVE
- GATE, ANGLE VALVE
- GLOBE VALVE
- PRESSURE REDUCING VALVE
- PRESSURE RELIEF VALVE
- CONTROL VALVE (2 PORT)
- CONTROL VALVE (3 PORT)
- SOLENOID VALVE

DUCT SYMBOLS

DOUBLE LINE SYMBOL	DESCRIPTION	SINGLE LINE SYMBOL
20x16	DUCT- FIRST NUMBER IS VISIBLE DIMENSION.	20x16
	MITERED ELBOW W/TURNING VANES	
R	RADIUS ELBOW W/VANE(S) (1.5=R/D STANDARD)	
	DUCT SECTION, POSITIVE PRESSURE	
	DUCT SECTION, NEGATIVE PRESSURE	
	DUCT & AIRFLOW UP(LEFT) POSITIVE PRESSURE DUCT & AIRFLOW DN(RIGHT) POSITIVE PRESSURE	
	DUCT & AIRFLOW UP(LEFT) NEGATIVE PRESSURE DUCT & AIRFLOW DN(RIGHT) NEGATIVE PRESSURE	
	DUCT & AIRFLOW UP(LEFT) NEG./POS. PRESSURE DUCT & AIRFLOW DN(RIGHT) NEG./POS. PRESSURE	
R	CHANGE OF ELEVATION=RISE (R), DROP (D)	R
20x16	DUCT W/INTERNAL LINING CLEAR INSIDE DIMENSIONS SHOWN	
AD	ACCESS DOOR=SIDE (L), BOTTOM (M), TOP (R)	AD
	FLEXIBLE CONNECTOR	
	FLEXIBLE DUCT	
FD	FD -FIRE DAMPER, SD -SMOKE DAMPER, FSD -FIRE/SMOKE DAMPER.	FSD
(TYPE)	MANUAL VOLUME DAMPER-SPECIFIC TYPE, NO LABEL-BUTTERFLY, OBD-OPPOSED BLADE DAMPER, PBD-PARALLEL BLADE DAMPER	(TYPE)
MCD	MCD-MOTORIZED CONTROL DAMPER	MCD
	BRANCH TAP-W/45 DEG. ENTRY	
	BRANCH TAP-CONICAL SPIN-IN	
	BRANCH TAP-STRAIGHT SPIN-IN	
20x10 10x10	TRANSITION	20x10 10x10
	AIR DEVICE, SUPPLY- CEILING. CLEAR AREAS INIDICATE AIR FLOW (THREE- AND FOUR-WAY TYPES SHOWN).	
B / 200	AIR DEVICE TAG AIRFLOW (CFM)	
	AIR DEVICE, RETURN- CEILING	
	AIR DEVICE, EXHAUST- CEILING	
	AIR DEVICE, SUPPLY- SIDEWALL.	
	AIR DEVICE, RETURN/EXHAUST- SIDEWALL.	

ABBREVIATIONS

A	
ABV	ABOVE
AC	ALTERNATING CURRENT / ABOVE CEILING
AFF	ABOVE FINISHED FLOOR
AMB	AMBIENT
AMP	AMPERAGE
ANSI	"AMERICAN NATIONAL STANDARDS INSTITUTE"
APPROX.	APPROXIMATE
ARI	AMERICAN REFRIGERATION INSITUTE
ASHRAE	"AMERICAN SOCIETY OF HEATING, REFRIGERATION, and AIR CONDITIONING ENGINEERS"
ASME	"AMERICAN SOCIETY OF MECHANICAL ENGINEERS"
ASPE	"AMERICAN SOCIETY OF PLUMBING ENGINEERS"
ASTM	"AMERICAN SOCIETY FOR TESTING AND MATERIALS"
AVG	AVERAGE
B	
BARO	BAROMETRIC
BAROPR	BAROMETRIC PRESSURE
BF	BELOW FLOOR
BFC	BELOW FINISHED CEILING
BHP	BRAKE HORSEPOWER
BOD	BOTTOM OF DUCT
BOM	BILL OF MATERIAL
BOP	BOTTOM OF PIPE
BTU	BRITISH THERMAL UNIT
C	
CCL	COOLING COIL
CCW	COUNTERCLOCKWISE
CD	CONDENSATE DRAIN
CFH	CUBIC FEET PER HOUR
CFM	CUBIC FEET PER MINUTE
CU	CONDENSING UNIT
CU.FT.	CUBIC FEET
CU.IN.	CUBIC INCHES
CV	CONSTANT VOLUME
CW	CLOCKWISE
D	
dB	DECIBEL
D	DRAIN
DBT	DRY BULB TEMPERAUTRE
DC	DIRECT CURRENT
DDC	DIRECT DIGITAL CONTROL
DEG	DEGREE
DENS	DENSITY
DIA	DIAMETER
DIFF	DIFFERENCE or DELTA
DN	DOWN
DP	DEEP
DPT	DEW POINT TEMPERATURE
E	
E/A	EXHAUST AIR
EA	EACH
EAT	ENTERING AIR TEMPERAUTRE
EDH	ELECTRIC DUCT HEATER
EF	EXHAUST FAN
EFF	EFFICIENCY
ENTH.	ENTHALPY
EOD	EMERGENCY OVERFLOW DRAIN
EWT	ENTERING WATER TEMPERATURE
EXP	EXPANSION

ABBREVIATIONS

F	
F	FAHRENHEIT
FCU	FAN COIL UNIT
FLR.	FLOOR
FOB	FLAT ON BOTTOM
FOT	FLAT ON TOP
FPM	FEET PER MINUTE
FPS	FEET PER SECOND
FT	FEET
FT.W.G.	FEET of WATER GAUGE
FVEL	FACE VELOCTIY
G	
GAL.	GALLON
GPH	GALLON PER HOUR
GPM.	GALLON PER MINUTE
GR	GRAINS
H	
HD	HOOD
HGT	HEIGHT
HP	HORSEPOWER
HPS	HIGH PRESSURE STEAM
HR	HOUR
HUM	HUMIDIFIER
HZ	HERTZ
I	
ID	INSIDE DIAMETER
IN.	INCH
IN.W.G.	INCHES of WATER GAUGE
J	
K	
KEF	KITCHEN EXHAUST FAN
KHE	KITCHEN HOOD EXHAUST
kW	KILOWATT
KWH	KILOWATT HOUR
L	
L-#	LOUVER DESIGNATION
LAT	LEAVING AIR TEMPERATURE
LBS.	POUNDS
LIQ	LIQUID
LWT	LEAVING WATER TEMPERATURE
M	
MAX.	MAXIMUM
MBH	THOUSAND BTU'S
MCA	MINIMUM CIRCUIT AMPACITY
MCF	THOUSAND CUBIC FEET
MIN.	MINIMUM or MINUTES
MOCP	MAXIMUM OVERCURRENT PROTECTION
MPS	MEDIUM PRESSURE STEAM
MSS	"MANUFACTURERS STANDARDIZATION SOCIETY of the Valves and Fittings Industry, Inc."
N	
N/A	NOT APPLICABLE
NC	NOISE CRITERIA
N.C.	NORMALLY CLOSED
NEBB	NAT'L ENVITONMENTAL BALANCING BUREAU
N.I.C.	NOT IN CONTRACT
N.O.	NORMALLY OPEN
N.T.S.	NOT TO SCALE
O	
O/A	OUTSIDE AIR
OD	OUTSIDE DIAMETER
OSHA	OCCUPATIONAL SAFETY and HAZARD ADMINISTRATION
OZ.	OUNCE
P	
PD	PRESSURE DIFFERENCE
PPM	PARTS PER MILLION

ABBREVIATIONS

PRESS.	PRESSURE
PSI	POUNDS PER SQUARE INCH
PSIA	"PSI, ABSOOLUTE"
PSIG	"PSI, GAUGE"
R	
R	THREMAL RESISTANCE
R-410a	REFRIGERANT-410a
R/A	RETURN AIR
RD	ROOF DRAIN
RE: 1/M-xx	"REFER TO DETAIL NO.1, SHEET M-xx"
RECIRC	RECIRCULATE
RH	RELATIVE HUMIDITY
RL	REFRIGERANT LIQUID
RPM	REVOLUTIONS PER MINUTE
RPS	REVOLUTIONS PER SECOND
RS	REFRIGERANT SUCTION
RTU	ROOFTOP UNIT
RV	RELIEF VENT
S	
s	SECOND
SA	SOUND ATTENUATOR
S/A	SUPPLY AIR
SAT	SATURATION
SF	SUPPLY FAN
SG	SPECIFIC GRAVITY
SMACNA	SHEETMETAL and AIR CONDITIONING CONTRACTORS NATIONAL ASSOCIATION
SP	STATIC PRESSURE
SPEC	SPECIFICATIONS
SQ.FT.	SQUARE FEET
SUCT.	SUCTION
T	
TD	TEMPERATURE DIFFERENCE
TEMP.	TEMPERATURE
TONS	TONS OF REFRIGERATION
TSTAT	THERMOSTAT
U	
U	HEAT TRANSFER COEFFICIENT
U/C	UNDER COUNTER
UG	UNDERGROUND
UH	UNIT HEATER
U.N.O.	UNLESS NOTED OTHERWISE
V	
V	VOLTS
VA	VOLT AMPERE
VAC	VACUUM
VAR	VARIABLE
VAV	VARIABLE AIR VOLUME
VEL	VELOCITY
VENT	VENTILATION
VERT	VERTICAL
VFD	VARIABLE FREQUENCY DRIVE
VOL	VOLUME
VP	VELOCITY PRESSURE
VTR	VENT THRU ROOF
W	
W/	WITH
W/O	WITHOUT
W	WATTS
WB	WET BULB
WBT	WET BULB TEMPERATURE
WT	WEIGHT
Y	
YCO	YARD CLEANOUT
YD	YARD
YR	YEAR
Z	
ZN	ZONE

GENERAL MECHANICAL NOTES:

1. HVAC, VENTILATION, AND AIR-CONDITIONING SYSTEMS ARE DESIGNED TO CONFORM TO REQUIREMENTS OF NFPA 90A.
2. ALL WORK SHALL CONFORM TO ALL STATE AND LOCAL CODES, RULES AND REGULATIONS, AND ORDINANCES.
3. CONTRACTOR SHALL SECURE AND PAY ALL FEES AND PERMITS PERTAINING TO THE CONTRACT.
4. CONTRACTOR SHALL COORDINATE WITH ARCHITECT FINAL LOCATION(S) OF ANY EQUIPMENT, DUCT, ETC., NOT SHOWN ON PLANS.
5. ALL WORK SHALL BE PERFORMED IN A CLEAN AND PROFESSIONAL MANNER. CLEAN THE JOB SITE DAILY AND REMOVE FROM THE PREMISES ANY DIRT AND DEBRIS CAUSED BY THE WORK INCLUDED IN THIS CONTRACT.
6. THE CONTRACTOR SHALL BE RESPONSIBLE FOR THE SAFEKEEPING OF HIS OWN PROPERTY ON THE JOB SITE. OWNER ASSUMES NO RESPONSIBILITY FOR PROTECTION OF PROPERTY AGAINST FIRE, THEFT AND ENVIRONMENTAL CONDITIONS.
7. CONTRACTOR SHALL BE RESPONSIBLE FOR WORKERS' IDENTIFICATION AND BADGING, SAFETY AND FIRE PROTECTION, CONTRACTOR'S LIABILITY INSURANCE, BARRICADES, WARNING SIGNS, TRASH REMOVAL, CUTTING AND PATCHING.
8. USE OF THE OWNERS ELEVATORS AND BUILDING CORRIDORS FOR HANDLING OF EQUIPMENT/MATERIALS SHALL BE AT THE DIRECTION OF THE OWNER AND SHALL BE COORDINATED WITH HIS OPERATIONS.
9. ALL EQUIPMENT SHALL BE INSTALLED IN STRICT COMPLIANCE WITH THE MANUFACTURER'S WRITTEN INSTRUCTIONS. THE CONTRACTOR SHALL PROVIDE ALL HANGERS AND SUPPORTS REQUIRED FOR A COMPLETE INSTALLATION.
10. WHERE THE TERM "PROVIDE" IS USED, IT SHALL MEAN "FURNISH AND INSTALL". THE CONTRACTOR SHALL COORDINATE HIS WORK WITH ALL THE OTHER TRADES PRIOR TO FABRICATION, PURCHASE AND/OR INSTALLATION OF ALL WORK.
11. CONTRACTOR SHALL BE RESPONSIBLE FOR ALL RIGGING, HANDLING AND PROTECTION OF MATERIALS.
12. CONTRACTOR SHALL BE RESPONSIBLE FOR ALL BEAM PENETRATIONS AS IT RELATES TO HIS WORK. CONTRACTOR SHALL SUBMIT SIZE AND LOCATION TO THE STRUCTURAL ENGINEER FOR REVIEW AND DETAIL.
13. ALL DUCT WORK SHALL BE CONSTRUCTED OF GALVANIZED STEEL IN ACCORDANCE WITH SMACNA MEDIUM OR LOW PRESSURE DUCT CONSTRUCTION METHODS AS APPLICABLE. SPECIAL EXHAUST DUCTS SHALL MEET HIGH VELOCITY STANDARDS AS REQUIRED.
14. DUCT SIZES SHOWN ARE NET INSIDE DIMENSIONS. INCREASE DUCT SIZE WHERE INTERNAL DUCTWORK INSULATION OR ACOUSTICAL LINING IS SHOWN OR SPECIFIED. SUPPLY, RETURN AND OUTSIDE AIR DUCTS SHALL BE INSULATED USING 2", 3/4 LB./CU.FT., R=6 (MIN.) EXTERNAL INSULATION WITH THE FOIL VAPOR BARRIER ON THE OUTSIDE. WHERE INDICATED ON THE DRAWINGS, 1-1/2", 1-1/2 LB./CU.FT. DENSITY ACOUSTICAL LINING WITH HEAVY VINYL COATING ON THE AIR STREAM SIDE, INSTEAD OF EXTERNAL DUCT INSULATION SHALL BE USED ON SUPPLY, RETURN, AND OUTSIDE AIR DUCTS. INSULATION THICKNESS SHALL BE INCREASED TO PROVIDE THE INSULATION R VALUE WHERE REQUIRED, OR DECREASED IN AIR CONDITIONED SPACES AS PERMITTED BY CODE.
15. WHERE CONDUIT, CABLES, DUCTWORK OR PIPING PASSES THROUGH FIRE RATED FLOORS OR WALLS, THE SLEEVES SHALL BE COMPLETELY SEALED WITH A FIRE STOP MATERIAL THAT IS UL LISTED AND ACCEPTED BY THE BUILDING DEPARTMENT AND FIRE DEPARTMENT AS BEING SUITABLE FOR THIS SERVICE. MATERIAL SUITED IS TO BE SUCH AS DOW CORNING CORP., SILICONE ELASTOMETER, DOW CORNING 3-6548 SILICONE RTV FOAM, OR APPROVED EQUAL. THIS MATERIAL SHALL BE INSTALLED IN ACCORDANCE WITH THE REQUIREMENTS OF THE MANUFACTURER TO MAINTAIN THE FIRE RATING OF THE PENETRATED WALL OR FLOOR.
16. CONTRACTOR SHALL BE RESPONSIBLE FOR ALL CORING AS IT RELATES TO HIS WORK.
17. CONTRACTOR SHALL REFER TO TYPICAL DETAILS FOR PIPING AND INSTALLATION OF EQUIPMENT.
18. TRAPPED CONDENSATE DRAINS FROM MECHANICAL EQUIPMENT SHALL BE PROVIDED FOR PROPER DRAINAGE TO SUIT EQUIPMENT PROVIDED. PROVIDE CONDENSATE DRAINS FOR EQUIPMENT WHERE REQUIRED, BUT NOT INDICATED ON THE DRAWINGS.
19. UNLESS OTHERWISE NOTED, ALL EQUIPMENT AND VALVE DRAINS SHALL BE INDEPENDENTLY PIPED FULL SIZE TO THE NEAREST PLUMBING DRAIN.
20. THE HVAC SYSTEM SHALL NOT BE USED AS TEMPORARY HEATING, COOLING OR DEHUMIDIFICATION FOR THE BUILDING DURING CONSTRUCTION, EXCEPT AS PERMITTED BY CONTRACT.
21. VERIFY FINISH WITH ARCHITECT PRIOR TO PURCHASING GRILLES, REGISTERS, DIFFUSERS, LOUVERS AND OTHER AIR DISTRIBUTION DEVICES.
22. CEILING DIFFUSER SIZES AS SHOWN ON PLANS INDICATE NECK SIZE. DIFFUSERS SHALL BE ALL ALUMINUM TYPE EQUAL TO TITUS MFG. CO. MODELS. EXCEPT WHERE INDICATED OTHERWISE ON THE DRAWINGS. FIRE RATED AIR DEVICES SHALL BE STEEL.
23. LINE THE TOP, BOTTOM, AND SIDES OF ALL RETURN AIR PLENUMS WITH DUCT LINER.
24. PROVIDE ACCESS DOORS IN DUCTS AND INACCESSIBLE FINISHES AT ALL FIRE DAMPERS, COMBINATION SMOKE/FIRE DAMPERS, VALVES, TRAP PRIMERS, AND ANY OTHER ITEM REQUIRING ADJUSTMENT OR PERIODIC MAINTENANCE.
25. PROVIDE MINIMUM 20" X 20" ACCESS PANELS FOR VISUAL INSPECTION AND MAINTENANCE ACCESS TO ALL FIRE DAMPERS AND COMBINATION FIRE/SMOKE DAMPERS ON BOTH SIDES OF RATED ASSEMBLIES.
26. ALL AIR CONDITIONING UNITS 1200 CFM OR LARGER SHALL HAVE A FIRESTAT SET AT 135°F INTERLOCKED WITH FAN MOTOR.
27. ALL AIR CONDITIONING UNITS HAVING A SUPPLY AIR CAPACITY GREATER THAN 2000 CUBIC FEET PER MINUTE SHALL BE EQUIPPED WITH A DUCT SMOKE DETECTOR
    A) IN THE R/A DUCT AHEAD OF FILTERS AND MIXING WITH O/A;
    B) DOWNSTREAM OF THE AIR FILTER(S) AND AHEAD OF ANY BRANCH CONNECTIONS.
    REFER TO UNIT SCHEDULES. COORDINATE WITH ELECTRICAL.
28. ALL MODEL NUMBERS INDICATED ARE PROVIDED TO ESTABLISH THE QUALITY LEVEL AND FEATURES REQUIRED. LISTED MANUFACTURERS AND OTHER PRIOR APPROVED EQUALS MAY BE SUBSTITUTED WHEN PROVIDED WITH EQUAL FEATURES, EITHER STANDARD OR AS ACCESSORIES. SUBSTITUTED AIR DEVICES MUST BE SIMILAR IN APPEARANCE TO THE ITEMS SPECIFICALLY INDICATED.
29. MOUNT ALL THERMOSTATS WITH THE TOP EDGE NO GREATER THAN 48" ABOVE FINISH FLOOR UNLESS OTHERWISE NOTED. PROVIDE PROVIDE LOCKING HEAVY DUTY PLASTIC OR METAL COVERS FOR ALL THERMOSTATS. VANDAL RESISTANT TEMPERATURE SENSORS DO NOT REQUIRE COVERS.
30. CONTRACTOR SHALL FIELD VERIFY ALL DIMENSIONS AND CONDITIONS PRIOR TO PROCEEDING WITH ANY WORK. WHERE DISCREPANCIES OCCUR BETWEEN THESE DOCUMENTS AND CURRENT CONDITIONS, THE DISCREPANCY SHALL BE REPORTED TO THE OWNER AND/OR ENGINEER FOR EXPEDITING AND RESOLUTION.
31. WORK SHALL INCLUDE ALL LABOR, MATERIALS, ACCESSORIES, ETC. AS ARE NECESSARY FOR THE INSTALLATION OF EACH PIECE OF EQUIPMENT AND EACH SYSTEM TO PROVIDE A COMPLETE AND OPERATING HVAC SYSTEM, AND THAT THE SYSTEM MEETS ALL REQUIREMENTS OF ITS LISTING, AND THAT ALL MANUFACTURER'S GUARANTEES AND WARRANTIES REMAIN IN EFFECT. THE CONTRACTOR SHALL VERIFY THAT ALL EQUIPMENT SHALL FIT IN THE SPACE PROVIDED PRIOR TO ORDERING EQUIPMENT.
32. CONTRACTOR SHALL COORDINATE ANY EQUIPMENT REQUIRING WIRING WORK WITH THE ELECTRICAL CONTRACTOR PRIOR TO FABRICATION, PURCHASE AND/OR INSTALLATION OF ALL WORK.
33. CONTRACTOR SHALL COORDINATE ANY EQUIPMENT REQUIRING PLUMBING WORK WITH THE PLUMBING CONTRACTOR PRIOR TO FABRICATION, PURCHASE AND/OR INSTALLATION OF ALL WORK.
34. PROVIDE ALL NECESSARY TEMPORARY OR PERMANENT CAPS OR PLUGS FOR PIPING. DO NOT LEAVE PIPING OPEN ENDED.
35. SUBMISSION OF PROPOSAL DIRECTLY OR INDIRECTLY IN CONNECTION WITH THIS WORK IMPLIES THAT THE BIDDER HAS EXAMINED THE JOB SITE UNDER WHICH HE WILL BE OBLIGATED TO OPERATE. SHOULD HE BE AWARDED THE WORK UNDER THIS CONTRACT, NO EXTRA CHARGE WILL BE ALLOWED FOR FAILURE OF ANY BIDDER TO EXAMINE THE SITE PRIOR TO BID.
36. CARE SHALL BE EXERCISED TO MINIMIZE ANY INCONVENIENCE OR DISTURBANCE TO OTHER AREAS OF THE BUILDING. ISOLATE WORK AREAS BY MEANS OF TEMPORARY PARTITIONS AND/OR TARPS TO KEEP DUST AND DIRT WITHIN THE CONSTRUCTION AREA. WORK AREA TO BE CLEANED AT THE END OF EACH WORK DAY TO A MANNER ACCEPTABLE TO BUILDING OWNER. THE CONTRACTOR SHALL USE ROUTES FOR EQUIPMENT, DUCTWORK AND PIPING ACCEPTABLE TO THE BUILDING OWNER.
37. ALL ROOF MOUNTED EQUI0MENT SHALL BE INSTALLED IN SUCH A MANNER AS TO BE OMPLETELY HIDDEN FROM PUBLIC VIEW, AT ALL VIEWING ANGLES. THE CONTRACTOR HALL PAY SPECIAL ATTENTION TO ALL ARCHITECTURAL, MECHANICAL, AND STRUCTURAL OCUMENTS TO ASSURE THAT ALL ROOF EQUIPMENT IS CONCEALED BEHIND PARAPET ALLS OR ARCHITECTURALLY APPROVED SCREENS.

ProjectVerde
ENGINEERING
TX Registration No. F-19841
723 S. Flores,
San Antonio, Texas 78204

ISSUE/REVISIONS		
#	DESCRIPTION	DATE

DUNAWAY
118 Broadway Suite 201 San Antonio, Texas 78205
Tel: 210.267.5246
(TX REG. F-1114)

muñoz
723 S. Flores • San Antonio, Texas 78204
210.349.1163 • www.munoz-co.com

MECH. SYMBOLS, ABBREV. & GEN.NOTES

WORLD HERITAGE CENTER
SAN ANTONIO, TEXAS

NOT FOR CONSTRUCTION
INTERIM REVIEW ONLY
DOCUMENT INCOMPLETE
NOT INTENDED FOR PERMITTING, BIDDING, OR CONSTRUCTION.
JAMES M. DREWRY
TEXAS LIC. NO. 63519
November 23, 2021

JOB NO.	A19021.00
DESIGNED BY:	AW
DRAWN BY:	AW
CHECKED BY:	JMD
DATE:	12/1/2021
SHEET:	M-001

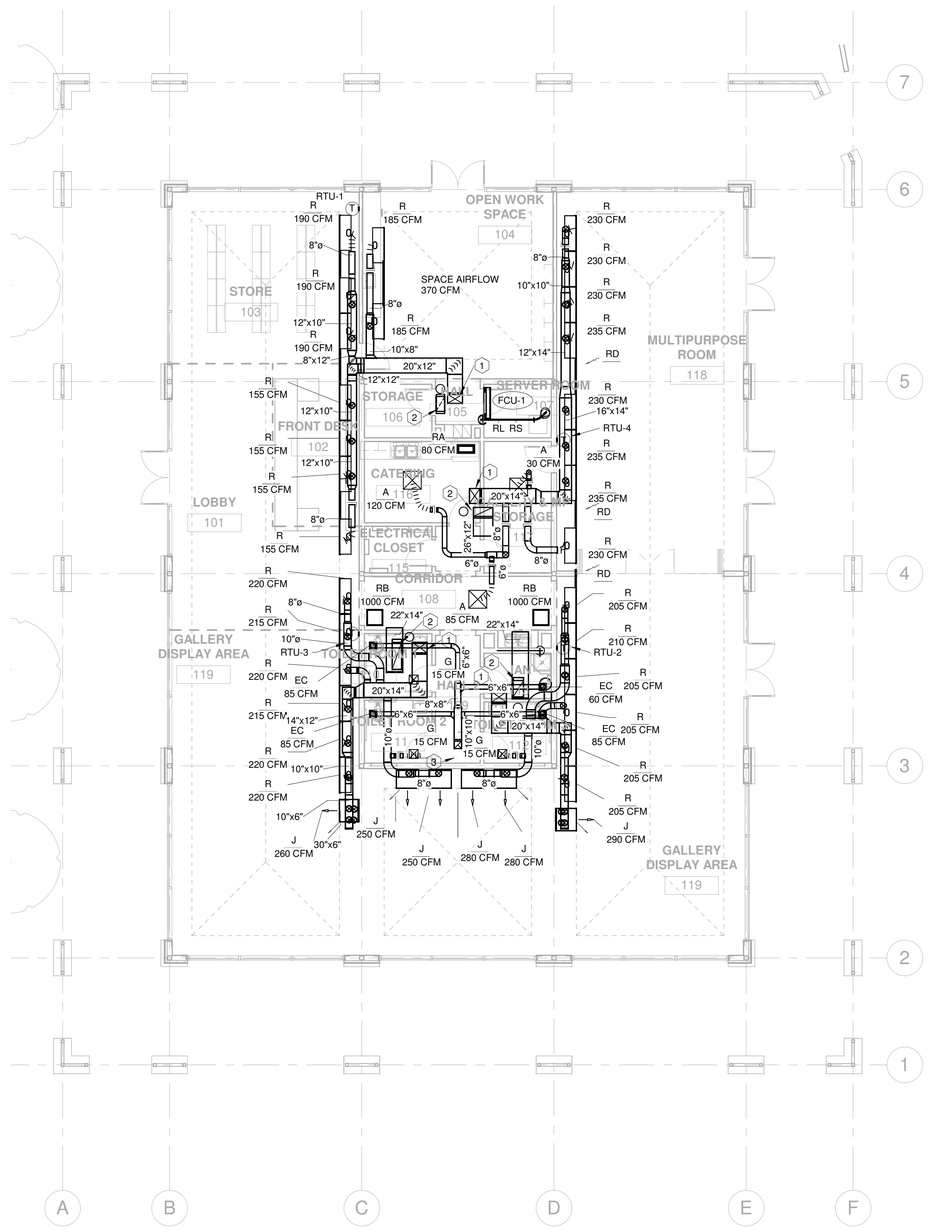

1 FLOOR PLAN - MECHANICAL
1/8" = 1'-0"

GENERAL NOTES:

1. PROVIDE COPPER CONDENSATE DRAIN PIPE FROM ALL A/C EQUIPMENT AND ROUTE TO MOP SINK IN RM.113 JANITOR'S CLOSET.

KEYED (#) NOTES:(THIS SHEET ONLY)

1. SUPPLY AIR DUCT DOWN FROM ROOF MOUNTED A/C UNIT.
2. RETURN AIR DUCT UP TO ROOF MOUNTED A/C UNIT.
3. EXHAUST AIR DUCT UP TO ROOF MOUNTED EXHAUST FAN.

0' 2' 4' 8' 16' 32'
SCALE: 1/8" = 1' - 0"

ProjectVerde
ENGINEERING
TX Registration No. F-19841
723 S. Flores,
San Antonio, Texas 78204

#	ISSUE/REVISIONS DESCRIPTION	DATE

FLOOR PLAN - MECHANICAL

WORLD HERITAGE CENTER
SAN ANTONIO, TEXAS

DUNAWAY
118 Broadway, Suite 201 San Antonio, Texas 78205
210.227.2000
(TX REG. F-1114)

muñoz
723 S. Flores • San Antonio, Texas 78204
210.349.1163 • www.munoz-co.com

NOT FOR CONSTRUCTION
INTERIM REVIEW ONLY
DOCUMENT INCOMPLETE
NOT INTENDED FOR PERMITTING, BIDDING, OR CONSTRUCTION
JAMES M. DREWRY
TEXAS LIC. NO. 63511
November 23, 2021

JOB NO.	A19021.00
DESIGNED BY:	AW
DRAWN BY:	AW
CHECKED BY:	JMD
DATE:	12/1/2021
SHEET:	M-201

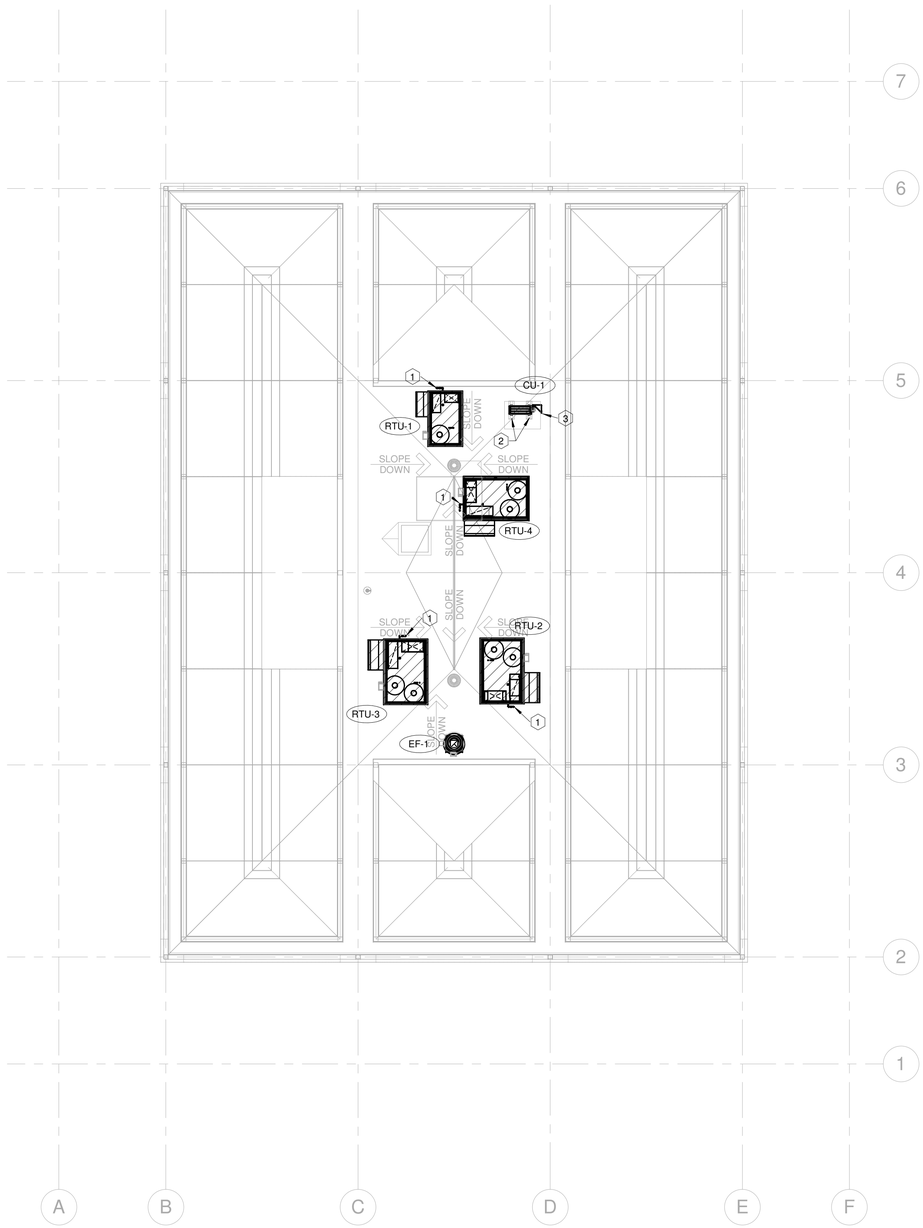

1 ROOF PLAN - MECHANICAL
1/8" = 1'-0"

KEYED # NOTES:(THIS SHEET ONLY)

1. 3/4" CONDENSATE PIPE DOWN THROUGH THE ROOF.
2. PROVIDE 18" HIGH EQUIPMENT SUPPORT RAIL SECURED TO ROOF DECK.
3. REFRIGERANT PIPE PAIR (RS/RL) DOWN THROUGH THE ROOF.

0' 2' 4' 8' 16' 32'
SCALE: 1/8" = 1' - 0"

ProjectVerde
ENGINEERING
TX Registration No. F-19841
723 S. Flores,
San Antonio, Texas 78204

ISSUE/REVISIONS

#	DESCRIPTION	DATE

ROOF PLAN - MECHANICAL

WORLD HERITAGE CENTER
SAN ANTONIO, TEXAS

DUNAWAY
118 Broadway, Suite 201 San Antonio, Texas 78205
210.227.2000
(TX REG. F-1114)

muñoz
723 S. Flores • San Antonio, Texas 78204
210.349.1163 • www.munoz-co.com

NOT FOR CONSTRUCTION
INTERIM REVIEW ONLY
DOCUMENT INCOMPLETE
NOT INTENDED FOR PERMITTING, BIDDING, OR CONSTRUCTION
JAMES M. DREWRY
TEXAS LIC. NO. 63513
November 23, 2021

JOB NO.	A19021.00
DESIGNED BY:	AW
DRAWN BY:	AW
CHECKED BY:	JMD
DATE:	12/1/2021
SHEET:	M-202

PACKAGED ROOFTOP UNIT SCHEDULE

TAG	UNIT TYPE	NOMINAL COOLING CAP. (TONS)	VOLTS/ PHASE/ HZ	MIN. CIRCUIT AMPS	MAX. OVERCURRENT PROTECTION	APPROX. OPERATING WEIGHT (LBS.)	REFRIGERATION: REFRIGERANT TYPE	REFRIGERATION: NO. OF COMPRESSORS	REFRIGERATION: NO. OF REFRIG. CIRCUITS	REFRIGERATION: INCREMENTS OF UNLOADING	REFRIGERATION: AMBIENT AIR TEMP. (DEG.F)	REFRIGERATION: MIN. SUCTION TEMP. (DEG.F)	REFRIGERATION: MAX. CONDENSING TEMP. (DEG.F)	SUPPLY FAN: FAN TYPE	SUPPLY FAN: AIR FLOW (CFM)	SUPPLY FAN: EXT. STATIC PRESSURE (IN.W.G.)	SUPPLY FAN: OUTSIDE AIR FLOW (CFM)	SUPPLY FAN: DRIVE TYPE	SUPPLY FAN: FAN SPEED (RPM)	SUPPLY FAN: APPROX. FAN BRAKE HP	SUPPLY FAN: MOTOR SIZE (HP)	COOLING: MIN. FACE AREA (SQ.FT.)	COOLING: MIN. TOTAL CAPACITY (MBH)	COOLING: MIN. SENSIBLE CAPACITY (MBH)	COOLING: MIN. EER at ARI CONDITIONS	COOLING: DESIGN EER at ARI CONDITIONS	COOLING: ENTERING AIR DB (DEG.F)	COOLING: ENTERING AIR WB (DEG.F)	COOLING: LEAVING AIR DB (DEG.F)	COOLING: LEAVING AIR WB (DEG.F)	COOLING: MIN. ROWS	COOLING: MAX. FINS PER INCH	HEATING: MIN. HEATING CAPACITY (MBH)	HEATING: ENTERING AIR DB (DEG.F)	HEATING: LEAVING AIR DB (DEG.F)	HEATING: ELECTRIC INPUT (KW)	HEATING: STAGES OF HEAT	MANUFACTURER	MODEL NO.	NOTES
RTU-1	AIR-COOLED, VERT. SINGLE ZN	4.0	208/ 3/ 60	49	50	800	R-410A	1	1	1	100	40	130	FC	1,560	0.9	120	DIRECT	HIGH	0.75	1.0	7.3	43.6	36.6	SEER 14	SEER 15.6	76.5	63.9	55.0	54.5	3	15	30.8	67.6	87.0	12.0	2	CARRIER	50HCCA05	1,3,4
RTU-2	AIR-COOLED, VERT. SINGLE ZN	6.0	208/ 3/ 60	49	50	1,000	R-410A	1	1	2	100	40	130	FC	2,100	1.6	265	BELT	915	2.2	3.0	8.9	65.0	51.4	11.2	12.2	77.5	64.8	55.0	54.5	3	15	47.4	64.8	87.0	12.0	2	CARRIER	50HCCD07	1,2,3,4
RTU-3	AIR-COOLED, VERT. SINGLE ZN	6.0	208/ 3/ 60	49	50	1,000	R-410A	1	1	2	100	40	130	FC	2,100	1.6	280	BELT	915	2.2	3.0	8.9	66.0	51.7	11.2	12.2	77.6	64.9	55.0	54.5	3	15	48.3	64.4	87.0	12.0	2	CARRIER	50HCCD07	1,2,3,4
RTU-4	AIR-COOLED, VERT. SINGLE ZN	6.0	208/ 3/ 60	49	50	1,000	R-410A	1	1	2	100	40	130	FC	2,100	1.6	265	BELT	915	2.2	3.0	8.9	65.0	51.5	11.2	12.2	77.5	64.8	55.0	54.5	3	15	39.1	64.8	83.0	12.0	2	CARRIER	50HCCD07	1,2,3,4

NOTES:
EQUIPMENT SELECTIONS MADE AT PROJECT ELEVATION OF 600 FT. ABOVE SEA LEVEL.
1- PROVIDE 14" HIGH ROOF CURB.
2- PROVIDE VFD FOR SUPPLY FAN MOTOR FOR TWO SPEED OPERATION.
3- PROVIDE MOTORIZED OUTSIDE AIR DAMPERS.
4- PROVIDE SINGLE POINT POWER CONNECTION.

CONDENSING UNIT SCHEDULE

TAG	SERVICE	TYPE	NOMINAL CAPACITY (TONS)	REFRIG. TYPE	NO. OF REFRIG. CIRCUITS	MIN. REQUIRED REFRIGERANT LIFT (FT.)	MIN. REQUIRED PIPE LENGTH TO EVAP. COIL (FT.)	STEPS OF UNLOADING	MIN. SUCTION TEMP. (DEG.F)	MAX. CONDENSING TEMP.(DEG.F)	MIN. SEER	VOLTS/ PHASE/ HZ	MIN. CIRCUIT AMPACITY	MAX. OVERCURRENT PROTECTION	AIR COOLED CONDENSER: AMB. TEMP. (DEG.F)	AIR COOLED CONDENSER: MIN. OPERATING TEMP.(DEG.F)	AIR COOLED CONDENSER: NO. OF FANS	AIR COOLED CONDENSER: FAN MOTOR SIZE (HP)	AIR COOLED CONDENSER: VOLTS/ PHASE	UNIT APPROX. OPERATING WEIGHT(LBS.)	MANUFACTURER	MODEL	NOTES
CU-1	FCU-1	AIR COOLED, SCROLL	2.0	R-410a	1	15	30	1	50	125	14.0	208/ 1/ 60	18.0	30	95	20	1	0.10	208/ 1	180	MITSUBISHI	PUY-A24NHA6	1,2,3,4,5

NOTES:
1 - ACTUAL COOLING CAPACITY OF UNIT SHALL BE SUITABLE FOR MATCHING FAN COIL UNIT PERFORMANCE SCHEDULED. ASSUME 2 DEG.F SUCTION LINE LOSS.
2- RATING CONDITIONS: INDOOR ENTERING COIL: 80°F DB / 67°F WB; OUTDOOR: 95°F DB.
3- INDOOR UNIT RECEIVES POWER THROUGH THE OUTDOOR UNIT.
4- PROVIDE WIND BAFFLE FOR OPERATION AT 0°F.
5- PROVIDE WITH EXTERNAL SERVICE VALVES WITH SERVICE PORT.

FAN COIL UNIT SCHEDULE

TAG	SERVICE	TYPE	MIN. O/A (QTY. (CFM)	FAN: TYPE	FAN: AIRFLOW (CFM)	FAN: EXT. STATIC PRESSURE (IN.W.G.)	FAN: DRIVE TYPE TYPE	FAN: FAN SPEED (RPM)	FAN: MIN. MOTOR SIZE (HP)	FAN: MOTOR SPEED (RPM)	FAN: VOLTS/ PHASE/ HZ	COOLING COIL: TYPE	COOLING COIL: AIRFLOW (CFM)	COOLING COIL: MIN. FACE AREA (SQ.FT.)	COOLING COIL: MIN. CAPACITY TOTAL (MBH)	COOLING COIL: MIN. CAPACITY SENSIBLE (MBH)	COOLING COIL: ENTERING AIR DB (DEG.F)	COOLING COIL: ENTERING AIR WB (DEG.F)	COOLING COIL: LEAVING AIR DB (DEG.F)	COOLING COIL: LEAVING AIR WB (DEG.F)	COOLING COIL: MIN. ROWS	COOLING COIL: MAX. FINS PER INCH	MIN. CIRCUIT AMPACITY (AMPS)	MAX. OVERCURRENT PROTECTION (AMPS)	APPROX. OPERATING WEIGHT (LB.)	MAXIMUM OVERALL UNIT DIMENSIONS: LENGTH (IN.)	MAXIMUM OVERALL UNIT DIMENSIONS: WIDTH (IN.)	MAXIMUM OVERALL UNIT DIMENSIONS: HEIGHT (IN.)	MANUF.	MODEL	NOTES
FCU-1	SERVER-IDF RM	DUCTLESS, WALL	N / A	FC	635	N / A	DIRECT	MED.	56 W	MED.	24DC	DX-410A	635	3.8	24.0	17.1	80.0	67.0	55.0	54.5	2	15	1.0	15	60	11.63	46.06	14.38	MITSUBISHI	PKA-A24KA	1,2,3,4,5

NOTES:
EQUIPMENT SELECTIONS MADE AT PROJECT ELEVATION OF 700 FT. ABOVE SEA LEVEL.
1- COMPONENTS ARE- FILTER RACK, COOLING COIL, FAN SECTION.
2- PROVIDE INTREGRAL CONDENSATE PUMP.
3- REFER TO DRAWINGS FOR LOCATION OF COIL CONNECTION(S).
4- PROVIDE AN ECM MOTOR FOR SUPPLY FAN.
5- PROVIDE A PROGRAMMABLE THERMOSTAT COMPLIANT WITH THE 2018 IECC.

AIR DEVICE SCHEDULE

TAG	SERVICE	TYPE	FACE APPEARANCE	NECK SIZE (IN.)	FACE SIZE (IN.)	AIRFLOW RANGE (CFM)	THROW * (FT.)	NOISE CRITERIA (NC	MATERIAL	FINISH	MODEL	NOTES
A	SUPPLY	CEILING, LAY-IN	LOUVERED	6" DIA.	24 x 24	1 - 120	3	<12	ALUMINUM	WHITE	TMS-AA	1,2,3
B	SUPPLY	CEILING, LAY-IN	LOUVERED	8" DIA.	24 x 24	121 - 250	5	<16	ALUMINUM	WHITE	TMS-AA	1,2,3
C	SUPPLY	CEILING, LAY-IN	LOUVERED	10" DIA.	24 x 24	251 - 440	7	<23	ALUMINUM	WHITE	TMS-AA	1,2,3
G	SUPPLY	CEILING, SURFACE	LOUVERED	6" DIA.	12 x 12	1 - 120	3	<15	ALUMINUM	WHITE	TMS-AA	1,2,3
H	SUPPLY	CEILING, SURFACE	LOUVERED	8" DIA.	12 x 12	121 - 250	5	<20	ALUMINUM	WHITE	TMS-AA	1,2,3
J	SUPPLY	SIDEWALL	BLADE, 0.75° o.c.	30 x 6	32 x 8	0 - 300	10 @45°	<25	ALUMINUM	WHITE	300FL	1
R	SUPPLY	SIDEWALL	1" LINEAR SLOT(2)	8" DIA.	5.25 x 48	121 - 240	27	<30	ALUMINUM	WHITE	ML-39	5,6
S	SUPPLY	SIDEWALL	1" LINEAR SLOT(2)	10" DIA.	5.25 x 80	241 - 420	27	<30	ALUMINUM	WHITE	ML-39	5,6
RA	RETURN	CEILING, LAY-IN	GRID- 0.5"x0.5"	8 x 20	12 x 24	0 - 600		<20	ALUMINUM	WHITE	50F	
RB	RETURN	CEILING, LAY-IN	GRID- 0.5"x0.5"	20 x 20	24 x 24	601 - 1750		<20	ALUMINUM	WHITE	50F	
RC	RETURN	CEILING, SURFACE	GRID- 0.5"x0.5"	10 x 10	11.8 x 11.8	0 - 430		<20	ALUMINUM	WHITE	50F	
RD	RETURN	SIDEWALL	1" LINEAR SLOT(2)	3.5 x (L)	5.25 x (L)	95 cfm / ft.		<30	ALUMINUM	WHITE	MLR-39	
EA	EXHAUST	CEILING, LAY-IN	GRID- 0.5"x0.5"	8 x 20	12 x 24	0 - 600		<20	ALUMINUM	WHITE	50F	
EB	EXHAUST	CEILING, LAY-IN	GRID- 0.5"x0.5"	20 x 20	24 x 24	601 - 1750		<20	ALUMINUM	WHITE	50F	
EC	EXHAUST	CEILING, SURFACE	GRID- 0.5"x0.5"	10 x 10	11.8 x 11.8	0 - 430		<20	ALUMINUM	WHITE	50F	

NOTES:
* - BASED ON TERMINAL VELOCITY OF 100 FPM
MANUFACTURER REFERENCED IS TITUS.
1 - MOUNTING FRAMES SHALL BE SUITABLE FOR SECURING TO THE CONSTRUCTION MATERIAL.
2 - THROW PATTERNS SHALL BE FOUR (4) WAY UNLESS NOTED OTHERWISE ON DRAWINGS.
3 - PROVIDE ROUND TO SQUARE OR ROUND TO ROUND TRANSITION WHEN REQUIRED.
4 - PROVIDE OPPOSED BLADE DAMPER.
5- PROVIDE SHEETMETAL PLENUM WITH INTERNAL INSULATION (MODEL MPI-39).
6- PROVIDE WITH BORDER FLANGE AND DUCT MOUNTING (TYPE 1B).

ProjectVerde
ENGINEERING
TX Registration No. F-19841
723 S. Flores,
San Antonio, Texas 78204

ISSUE/REVISIONS

#	DESCRIPTION	DATE

MECHANICAL - SCHEDULES

WORLD HERITAGE CENTER
SAN ANTONIO, TEXAS

DUNAWAY
118 Broadway, Suite 201, San Antonio, Texas 78205
210.225.1784
(TX REG. F-1114)

muñoz
723 S. Flores • San Antonio, Texas 78204
210.349.1163 • www.munoz-co.com

NOT FOR CONSTRUCTION
INTERIM REVIEW ONLY
DOCUMENT INCOMPLETE
NOT INTENDED FOR PERMITTING, BIDDING, OR CONSTRUCTION
JAMES M. DREWRY
TEXAS LIC. NO. 83513
December 23, 2021

JOB NO.	A19021.00
DESIGNED BY:	AW
DRAWN BY:	AW
CHECKED BY:	JMD
DATE:	12/1/2021
SHEET:	M-301

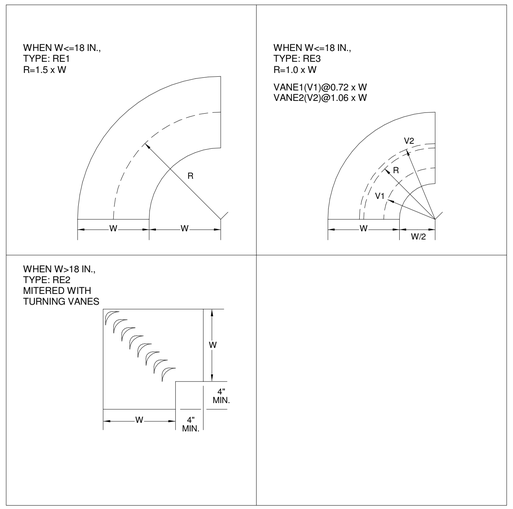

1 RECTANGULAR DUCT ELBOWS DETAIL

NOT TO SCALE

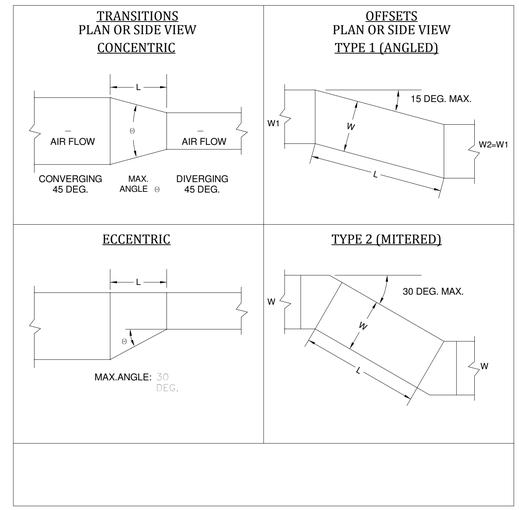

2 DUCT TRANSITIONS & OFFSET DETAIL

NOT TO SCALE

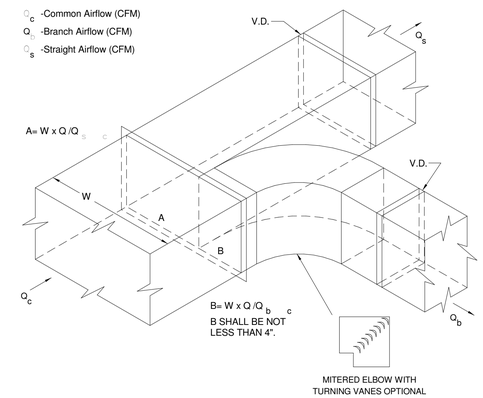

3 RECTANGULAR DUCT PARALLEL BRANCHES

NOT TO SCALE

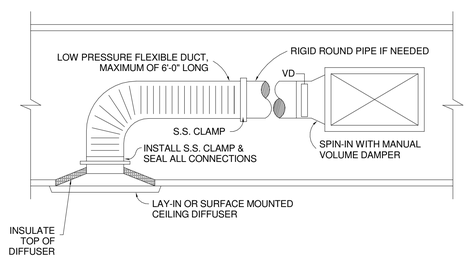

4 SUPPLY AIR DEVICE CONNECTION DETAIL

NOT TO SCALE

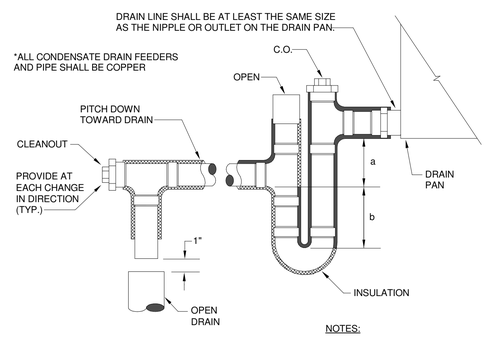

UNIT STATIC PRESS.	a	b
0"-1"	1"	2"
1"-2"	2"	3"
2"-3"	3"	4"

NOTES:

1. FOR DEPTH OF SEAL, SEE SCHEDULE BELOW.
2. LOCATE TRAP SO AS TO BE ACCESSIBLE FOR CLEANING.

5 CONDENSATE DRAIN TRAP DETAIL

NOT TO SCALE

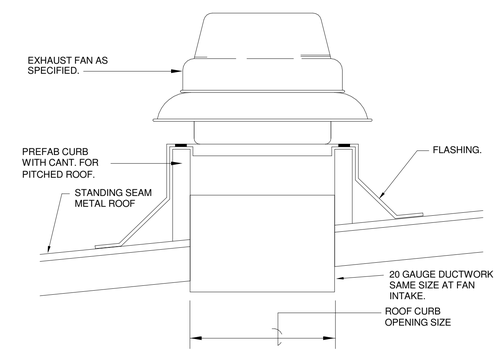

6 DOWNBLAST ROOF MOUNTED EXHAUST FAN DETAIL

NOT TO SCALE

ProjectVerde
ENGINEERING
TX Registration No. F-19841
723 S. Flores,
San Antonio, Texas 78204

#	ISSUE/REVISIONS DESCRIPTION	DATE

MECHANICAL - DETAILS

WORLD HERITAGE CENTER
SAN ANTONIO, TEXAS

DUNAWAY
118 Broadway, Suite 201 San Antonio, Texas 78205
Tel: 210.225.1784
(TX REG. F-1114)

muñoz
723 S. Flores • San Antonio, Texas 78204
210.349.1163 • www.munoz-co.com

NOT FOR CONSTRUCTION
INTERIM REVIEW ONLY
DOCUMENT INCOMPLETE
NOT INTENDED FOR PERMITTING, BIDDING, OR CONSTRUCTION
JAMES M. DREWRY
TEXAS LIC. NO. 63513
November 23, 2021

JOB NO.	A19021.00
DESIGNED BY:	AW
DRAWN BY:	AW
CHECKED BY:	JMD
DATE:	12/1/2021
SHEET:	M-401

ABBREVIATIONS

A

ABV	ABOVE
A/C	AIR CONDITIONING
AC	ABOVE COUNTER
ACC	AIR COOLED CHILLER
ACCU	AIR COOLED CONDENSING UNIT
AD	ACESS DOOR
ADA	AMERICANS WITH DISABILITIES ACT
AF	AMPERE FUSE, AMPERE FRAME
AFC	ABOVE FINISHED CEILING
AFF	ABOVE FINISHED FLOOR
AFG	ABOVE FINISHED GRADE
AHU	AIR HANDLING UNIT
AIC	AMPERE INTERRUPT CAPACITY
AL	ALUMINUM
AM	AMMETER
AMP	AMPLIFIER
ANN	ANNUNICATOR
AP	ACCESS PANEL, ALARM PANEL
ARCH	ARCHITECT, ARCHITECTURAL
ASC	AMPERE SHORT CIRCUIT
AT	AMPERE TRIP RATING
ATS	AUTOMATIC TRANSFER SWITCH
AVG.	AVERAGE
AUX.	AUXILIARY
AWG.	AMERICAN WIRE GAUGE

B

BKR	BREAKER
BLDG.	BUILDING

C

C	CONDUIT, CELSIUS
CATV	CABLE TELEVISION SYSTEM
CCTV	CLOSED CIRCUIT TELEVISION
CH	CHILLER
CHP	CHILLED WATER PUMP
CIRC	CIRCULATING
CKT	CIRCUIT
CL	CENTERLINE
CLG.	CEILING
CMU	CONCRETE MASONARY UNIT
COL.	COLUMN
CONC	CONCRETE
CONN	CONNECTION
CONT.	CONTINUOUS,CONTINUATION
CONTR.	CONTROLLER, CONTRACTOR
CP.	CIRCULATING PUMP
CPUC	CPU CHILLER
CTR	CENTER
CU	COPPER
CWP	CONDENSER WATER PUMP

D

dB	DECIBEL
DC	DIRECT CURRENT
DDC	DIRECT DIGITAL CONTROL
DTL	DETAIL
DIA	DIAMETER
DIM	DIMENSION
DISC	DISCONNECT
DN	DOWN
DP	DISTRIBUTION PANEL
DPDT	DOUBLE-POLE, DOUBLE-THROW
DPST	DOUBLE-POLE, SINGLE-THROW
DR	DROPPED RECEPTACLE
DW	DISHWASHER
DWG	DRAWING
DWH	DOMESTIC WATER HEATER
DWP	DOMESTIC WATER PUMP
DXFC	DX FAN COIL UNIT

E

EXST	EXISTING
EA	EACH
EC	ELECTRICAL CONTRACTOR
E.C.	EMPTY CONDUIT
EDF	ELECTRIC DRINKING FOUNTAIN
EF	EXHAUST FAN
ELEC.	ELECTRICAL
ELEV.	ELEVATOR
EMERG	EMERGENCY
EMS	ENERGY MANAGEMENT SYSTEM
ENCL.	ENCLOSURE
ENGR.	ENGINEER
EPO	EMERGENCY POWER OFF
EQUIP	EQUIPMENT
EUH	ELECTRIC UNIT HEATER
EWH	ELECTRIC WATER HEATER
EX	EXHAUST

F

FA	FIRE ALARM
FACP	FIRE ALARM CONTROL PANEL
FCU	FAN COIL UNIT
FIXT	FIXTURE
FLA	FULL LOAD AMPS
FLEX	FLEXIBLE
FLR	FLOOR
FRZR	FREEZER
FSD	MOTORIZED FIRE SMOKE DAMPER
FT	FOOT, FEET

G

GA	GAUGE
GALV	GALVANIZED
GC	GENERAL CONTRACTOR
GEN	GENERATOR
GFI	GROUND FAULT CIRCUIT INTERRUPTER
GFCI	GROUND FAULT CIRCUIT INTERRUPTER
GND	GROUND

H

HACR	HEATING, AIR CONDITIONING RATED CIRCUIT BREAKER
HD	ELECTRIC HAND DRYER
HID	HIGH INTENSITY DISCHARGE
HOA	HAND-OFF-AUTOMATIC
HORIZ	HORIZONTAL
HP	HORSEPOWER
HPS	HIGH PRESSURE SODIUM
HTG	HEATING
HTR	HEATER
HVAC	HEATING, VENTILATING, AND AIR CONDITIONING
HWP	HEATING WATER PUMP
HZ	HERTZ

I

ID	INSIDE DIAMETER
IG	ISOLATED GROUND
IN.	INCH

J

JB	JUNCTION BOX
JP	JOCKEY PUMP

K

KEC	KITCHEN EQUIPMENT CONTRACTOR
KO	KNOCKOUT
KVA	KILOVOLT- AMPS
KW	KILOWATT
KWH	KILOWATT-HOUR

L

LED	LIGHT EMITTING DIODE
LF	LINEAR FEET
LRA	LOCKED ROTOR AMPS
LTG	LIGHTING
LV	LOW VOLTAGE
LVL	LEVEL

M

M	METER
MAX.	MAXIMUM
MC	MECHANICAL CONTRACTOR
MCB	MAIN CIRCUIT BREAKER
MCC	MOTOR CONTROL CENTER
MDP	MAIN DISTRIBUTION PANEL
MECH.	MECHANICAL
MFR	MANUFACTURER
MH	METAL HALIDE
MIC	MICROPHONE
MIN.	MINIMUM
MLO	MAIN LUGS ONLY
MSB	MAIN SWITCHBOARD
MTD	MOUNTED

N

NA	NOT APPLICABLE
N3R	NEMA 3R ENCLOSURE
N4X	NEMA 4X ENCLOSURE
NC	NORMALLY CLOSED
NEC	NATIONAL ELECTRICAL CODE
NEMA	NATIONAL ELECTRICAL MANUFACTURER'S ASSOCIATION
NF	NON-FUSED
NFPA	NATIONAL FIRE PROTECTION ASSOCIATION
N.I.C.	NOT IN CONTRACT
NL	NIGHT LIGHT
N.O.	NORMALLY OPEN
N.T.S.	NOT TO SCALE

O

OAF	OUTSIDE AIR FAN
OAHU	OUTSIDE AIR HANDLING UNIT
OC	ON CENTER
OD	OUTSIDE DIAMETER
OHE	OVERHEAD ELECTRICAL

P

P	POLE
PB	PUSHBUTTON
PH	PHASE
PL	PILOT LIGHT
PLBG	PLUMBING
PNL	PANEL
PP	POWER POLE
PRI	PRIMARY
PVC	POLYVINYL CHLORIDE
PWR	POWER

Q

QTY	QUANTITY

R

RCP	REFLECTED CEILING PLAN
RCPT	RECEPTABLE
RE	REFERENCE, REFER
REQ	REQUIRED
REV	REVISION, REVISE
RGS	RIGID GALVANIZED STEEL
RLA	RUNNING LOAD AMPS
RTU	ROOFTOP UNIT

S

SC	SPLIT / SHARED CIRCUIT
SCHED	SCHEDULE
SEC	SECONDARY
SECT	SECTION
SF	SQUARE FEET
SHT	SHEET
SPEC	SPECIFICATION
SPKR	SPEAKER
SPDT	SINGLE-POLE, DOUBLE THROW
SPST	SINGLE-POLE, SINGLE-THROW
SQ.	SQUARE
ST	SHUNT TRIP
STD	STANDARD
STL	STEEL
SURF	SURFACE
SW	SWITCH
SWBD	SWITCHBOARD

T

TEL	TELEPHONE
TP	TAMPER PROOF (RECEPTACLE)
TTB	TELEPONE TERMINAL BOARD
TVSS	TELEVISION VOLTAGE SURGE SUPPRESSOR
TYP	TYPICAL

U

UG	UNDERGROUND
UGE	UNDERGROUND ELECTRIC
UL	UNDERWRITERS LABORATORIES, INC.
UNO	UNLESS NOTED OTHERWISE
UPS	UNINTERRUPTABLE POWER SYSTEM

V

V	VOLT
VA	VOLT-AMPERE
VAV	VARIABLE AIR VOLUME
VC	VOLUME CONTROL
VERT	VERTICAL
VFD	VARIABLE FREQUENCY DRIVE
VP	VACUUM PUMP
VM	VOLT METER

W

W	WATT
WG	WIREGUARD
W	WITH
WO	WITHOUT
WP	WEATHERPROOF

X

XFMR	TRANSFORMER

Z

Z	ZONE

ELECTRICAL SYMBOLS

MOTORS AND CONTROLS

- SINGLE OR THREE PHASE MOTOR. NUMBER INDICATES HORSEPOWER
- DISCONNECT (SAFETY) SWITCH "200/3/150" DENOTES AMPERES/POLE/FUSE, "NF" DENOTES NON-FUSED, "N3R" DENOTES NEMA 3R.
- ENCLOSED CIRCUIT BREAKER- "200/3/150" DENOTES AMPERES/POLE/TRIP.
- MOTOR STARTER FURNISHED BY DIVISION 23 AND INSTALLED BY DIVISION 26.
- COMBINATION DISCONNECT (SAFETY) SWITCH AND MOTOR STARTER, "30/3/15/#0" DENOTES AMPERES/POLE/FUSE/STARTER SIZE, "NF" DENOTES NON-FUSED. FURNISHED BY DIVISION 23 AND INSTALLED BY DIVISION 26.
- VFD — VARIABLE FREQUENCY DRIVE FURNISHED BY DIVISION 23 AND INSTALLED BY DIVISION 26.
- EPO — EMERGENCY POWER OFF BUTTON

RECEPTACLES AND OUTLETS

ALL RECEPTACLES SHALL BE MOUNTED 16" ABOVE FINISHED FLOOR TO CENTER OF DEVICE UNLESS NOTED OTHERWISE.

- SIMPLEX WALL RECEPTACLE, NEMA 5-20R, 20A, 125V.
- DUPLEX WALL RECEPTACLE, NEMA 5-20R, 20A, 125V.
  - "EM" DENOTES EMERGENCY CIRCUIT. PROVIDE RED RECEPTACLE AND FACEPLATE.
  - "GFCI" DENOTES GROUND FAULT INTERRUPTER.
  - "WP" DENOTES WEAHTERPROOF.
  - "TP" DENOTES SAFETY TYPE, (TAMPER PROOF)
  - "AC" DENOTES ABOVE COUNTER MOUNTING, SEE ARCHITECTURAL PLANS FOR EXACT MOUNTING HEIGHT.
- DUPLEX WALL RECEPTACLE SERVED FROM EMERGENCY POWER.
- SPLIT WIRED RECEPTACLE. TOP RECEPTACLE SHALL BE SWITCHED ACCORDING TO PLANS, AND BOTTOM SHALL REMAIN UNSWITCHED.
- FOURPLEX (DOUBLE DUPLEX) WALL RECEPTACLE, NEMA 5-20R, 20A, 125V.
- R — QUADRUPLEX WALL RECEPTACLE SERVED FROM EMERGENCY POWER.
- SPECIAL RECEPTACLE, NEMA CONFIGURATION AS NOTED.
- D R P — FLUSH ELECTRICAL FLOOR OUTLET, "P" DENOTES POKE-THRU. "D" INDICATES DUPLEX RECEPTACLE, "R" INDICATES RED RECEPTACLE ON EMERGENCY POWER.
- MULTI-OUTLET SURFACE RACEWAY. SEE ARCHITECTURAL DRAWINGS FOR EXACT MOUNTING HEIGHTS.
- J — JUNCTION BOX (SQUARE)
- J — JUNCTION BOX
- DUPLEX RECEPTACLE WITH HOMERUN
- DUPLEX RECEPTACLE (PEDESTAL MOUNTED)
- TWO-GANG FLOOR OUTLET
- THREE-GANG FLOOR OUTLET
- DIRECT CONNECTION TO EQUIPMENT
- P — PULL BOX (OVER 4" SQUARE)

LIGHTING

LETTER(S) DENOTE TYPE- SEE LIGHTING FIXTURE SCHEDULE FOR ADDITIONAL INFORMATION.

- 2' x 4' LIGHT FIXTURE
- 2' x 2' LIGHT FIXTURE
- 1' x 4' LIGHT FIXTURE
- 1' x 2' LIGHT FIXTURE
- 1' x 1' LIGHT FIXTURE
- STRIP LIGHT FIXTURE
- DOWNLIGHT FIXTURE.
- WALL MOUNTED LIGHT FIXTURE.
- CEILING MOUNTED EXIT SIGN; ARROWS AS INDICATED. SHADED AREA DENOTES FACE.
- WALL MOUNTED EXIT SIGN; ARROWS AS INDICATED. SHADED AREA DENOTES FACE.
- EMERGENCY WALL MOUNTED LIGHTING FIXTURE. BATTERY OPERATED UNLESS NOTED OTHERWISE.
- LIGHT FIXTURE ON EMERGENCY BRANCH CIRCUIT

SWITCHES

ALL SWITCHES SHALL BE MOUNTED AT 42" ABOVE FINISHED FLOOR TO CENTER OF DEVICE UNLESS NOTED OTHERWISE.

- $ — SWITCH, SPST, 20A, 120/277V.
- $ — SWITCH, 20A, 120/277V.
  - "2" DENOTES DPST,
  - "P" DENOTES PILOT LIGHT,
  - "F" FAN SPEED CONTROLLER,
  - "OC" OCCUPANCY SENSOR,
- $$ — DUAL-LEVEL SWITCHING. INNER LAMP TO BE SWITCHED, SEPARATELY FROM OUTER LAMP.
- $MC — SWITCH, SPDT, CENTER OFF, MOMENTARY CONTACT.
- $D — DIMMER CONTROL SWITCH, 600 WATTS UNLESS NOTED OTHERWISE.
- $3K — THREE-WAY KEY SWITCH, 20A, 120/277V.
- $SC — WALL MOUNTED SWITCH TO CONTROL MOTORIZED PROJETION SCREENS.
- $M — MOTOR RATED SWITCH WITH THERMAL OVERLOADS
- $T — MOTOR RATED TOGGLE SWITCH
- OC — CEILING MOUNTED OCCUPANCY SENSOR
- MP — MASTER OCCUPANCY SENSOR POWER PACK

RACEWAYS AND WIRING

- CAP AND STAKE
- CONDUIT CONCEALED IN WALL OR CEILING
- CONDUIT UNDER SLAB OR UNDERGROUND
- EM — EMERGENCY CONDUIT
- EXPOSED CONDUIT
- DB — UNDERGROUND CONDUIT, "DB" DENOTES DUCTBANK
- OHE — OVERHEAD ELECTRIC PRIMARY UTILITY POWER LINE
- CONDUIT TURNED UP
- CONDUIT TURNED DOWN
- HASH MARKS INDICATE NUMBER OF CONDUCTORS. LEFT TO RIGHT: PHASE/NEUTRAL/SWITCH LEG/GROUND/ISOLATED GROUND. NO HAS MARKS INDICATES (2)#12, PLUS GROUND, UNLESS NOTED OTHERWISE.
- 1LA-2,4 — HOMERUN TO PANEL WITH CIRCUIT NUMBER(S) AS INDICATED.
- TELECOMMUNICATIONS CABLE TRAY TO BE CONCEALED ABOVE ACCESSABLE CEILING.

ELECTRICAL EQUIPMENT

- DISTRIBUTION PANEL
- SWITCHBOARD, MAIN DISTRIBUTION PANEL OR MOTOR CONTROL CENTER
- PANELBOARD (FLUSH/SURFACE MOUNT)
- FLOOR MOUNTED DRY-TYPE TRANSFORMER
- SUSPENDED OR WALL MOUNTED TRANSFORMER
- ATS — AUTOMATIC TRANSFER SWITCH
- PLYWOOD TERMINAL BOARD, TYPE AS NOTED, 4' x 8' x 3/4" UNLESS NOTED OTHERWISE.
- TERMINAL CABINET (FLUSH/SURFACT MOUNT), TYPE AS NOTED, 24" x 48" x 3-1/2" UNLESS NOTED OTHERWISE.
- BAT — BATTERY/INVERTER UNIT
- COPPER GROUND BUSBAR, REFER TO DIVISION 27 FOR SPECIFICATIONS

COMMUNICATIONS

ALL RECEPTACLES SHALL BE MOUNTED 16" ABOVE FINISHED FLOOR TO CENTER OF DEVICE UNLESS NOTED OTHERWISE.
THE FOLLOWING NOTATIONS REFER TO ALL COMMUNICATIONS OUTLETS:
"FAX" DENOTES OUTLET DEDICATED FOR A FAX,
"W" DENOTES WALL PHONE, SHALL BE MOUNTED AT 42" A.F.F.
"PAY" DENOTES PAY PHONE, SHALL BE MOUNTED 42" A.F.F.

- TELEPHONE WALL OUTLET.
- DATA WALL OUTLET.
- VOICE/DATA OUTLET.
- FLUSH TELEPHONE FLOOR OUTLET, "P" DENOTES POKE-THRU
- FLUSH DATA FLOOR OUTLET, "P" DENOTES POKE-THRU
- FLUSH VOICE/DATA FLOOR OUTLET, "P" DENOTES POKE-THRU
- DS — SCHOOL INTERCOMMUNICATION SYSTEM DESKSET.
- HS — SCHOOL INTERCOMMUNICATION SYSTEM HANDSET.
- TV — TELEVISION OUTLET 1 GANG JUNCTION BOX WITH ONE FEMALE COAX BARREL CONNECTOR MOUNTED IN SINGLE GANG S.S. COVER PLATE.
- M — MICROPHONE WALL OUTLET, "C" INDICATES CEILING MOUNTED
- S VC — CEILING MOUNTED SPEAKER. "VC" INDICATES VOLUME CONROL ON SPEAKER.
- S — SPEAKER OUTLET.
- S — WALL MOUNTED SPEAKER.
- S — SUPPLEMENTAL SOUND SPEAKER.
- C — SCHOOL INTERCOMMUNICATION SYSTEM CALL-IN. PUSH BUTTON
- BELL, BUZZER OR CHIME AT 80+ A.F.F.
- VC — VOLUME CONTROL - WALL MOUNTED
- FO — FIBER OUTLET
- AX — AUXILIARY INPUT WALL JACK.
- H — "HIGH" PORTION OF "HIGH/LOW" OUTLETS, REFER TO OUTLET DETAIL.
- L — "LOW" PORTION OF "HIGH/LOW" OUTLETS, REFER TO OUTLET DETAIL.
- WV — WALL MOUNTED VOICE DROP, MOUNT +42" A.F.F.

MISCELLANEOUS

- e — 'e' EXISTING DEVICES TO REMAIN, UNLESS NOTED OTHERWISE.
- SHADED SYMBOLS INDICATE EXISTING DEVICES TO REMAIN, UNLESS NOTED OTHERWISE.
- INDICATES WALL-MOUNTED WHEN ATTACHED TO ANY SYMBOL
- 1 — DRAWING NOTE REFERENCE
- 1 — STARTER/DISCONNECT SCHEDULE REFERENCE
- 1 — FEEDER SCHEDULE REFERENCE
- LC — LIGHTING CONTACTOR
- TS — TIME SWITCH
- PC — PHOTOCELL
- PUSH BUTTON
- TC — TIMECLOCK
- R — RELAY

FIRE ALARM

- W — WATER FLOW SWITCH
- SP — SUPERVISORY SWITCH
- S D — SMOKE DETECTOR - "D" INDICATES DUCT TYPE
- H — HEAT DETECTOR
- S — SPEAKER/VISUAL +80" A.F.F. - 15/75cd UNLESS NOTED OTHERWISE.
- D — MAGNETIC DOOR HOLDER
- R — AUXILIARY CONTROL RELAY
- F — FIRE ALARM PULL STATION +42" AFF
- F — FIREMAN'S TELEPHONE JACK +42" AFF
- F — AUDIO VISUAL FIRE ALARM HORN +80" AFF
- H — AUDIO FIRE ALARM HORN +80" AFF
- V — VISUAL FIRE ALARM (STROBE) +80" AFF
- FACP — FIRE ALARM CONTROL PANEL
- ANN — REMOTE FIRE ALARM ANNUNCIATOR PANEL
- VEP — FIRE ALARM VOICE EVACUATION PANEL
- S — FIRE ALARM SPEAKER / WALL MOUNTED
- M — MINI AUDIO FIRE ALARM HORN +80" AFF
- MS — MINI AUDIO/VISUAL FIRE ALARM HORN +80" AFF
- FH — FIRE FIGHTER HANDSET
- FSD — FIRE SMOKE DAMPER
- V — VISUAL FIRE ALARM STROBE, CEILING MOUNTED
- F — AUDIO VISUAL FIRE ALARM HORN, CEILING MOUNTED
- S — FIRE ALARM SPEAKER / VISUAL, CEILING MOUNTED

SECURITY

- C — CARD KEY ACCESS
- CAMERA
- CAMERA WITH TILT/PAN
- KP — KEYPAD
- M — CEILING MOUNTED MOTION DETECTOR
- M — WALL MOUNTED MOTION DETECTOR
- DC — DOOR CONTACT
- ACB — ALARM CONTROL BOX
- A — ALARM AUDIO DEVICE

ONE LINE & RISER DIAGRAMS

- 800A/3P — SWITCH, RATING AS SHOWN
- 400A — FUSE, RATING AS SHOWN
- GROUND CONNECTION
- SPD — SURGE PROTECTION DEVICE
- M — ELECTRICAL METER

ProjectVerde
ENGINEERING
TX Registration No. F-19841
723 S. Flores,
San Antonio, Texas 78204

ISSUE/REVISIONS		
#	DESCRIPTION	DATE

ELEC. SYMBOLS, ABBREV. & GEN. NOTES

DUNAWAY
118 Broadway Suite 201 San Antonio, Texas 78205
Tel: 210.267.5246
(TX REG. F-1114)

muñoz
723 S. Flores • San Antonio, Texas 78204
210.349.1163 • www.munoz-co.com

WORLD HERITAGE CENTER
SAN ANTONIO, TEXAS

NOT FOR CONSTRUCTION
INTERIM REVIEW ONLY
DOCUMENT INCOMPLETE
NOT INTENDED FOR PERMITTING, BIDDING, OR CONSTRUCTION.
J. DUANE LETSON
TEXAS LIC. NO. 84715
November 23, 2021

JOB NO.	A19021.00
DESIGNED BY:	JDL
DRAWN BY:	JDL
CHECKED BY:	JDL
DATE:	12/01/2021
SHEET:	E-001

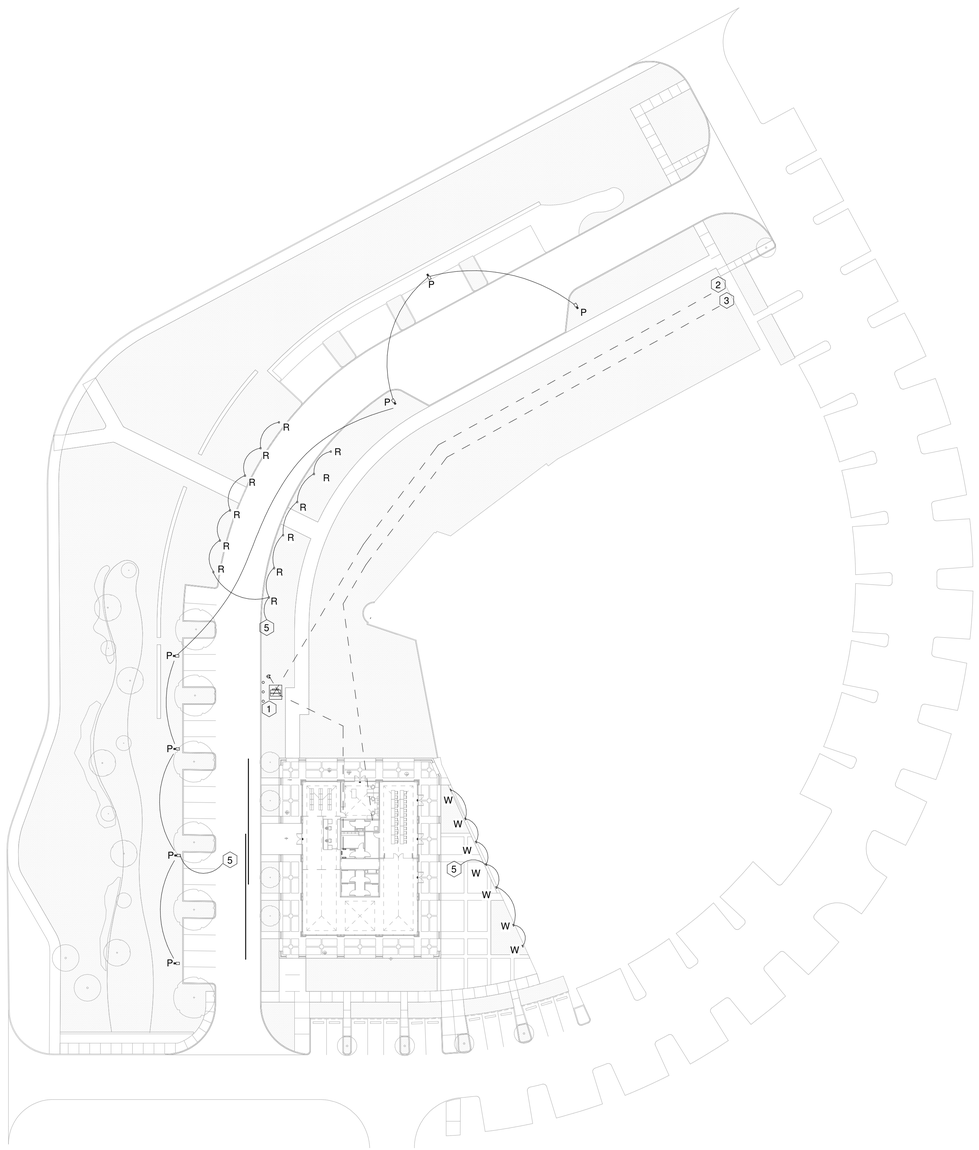

1 SITE PLAN - ELECTRICAL
1" = 40'-0"

GENERAL ELECTRICAL NOTES

1. CONTRACTOR SHALL COORDINATE ALL ELECTRICAL AND TELECOM UTILITY ROUTING WITH THE LOCAL UTILITY COMPANIES.
2. EXTERIOR LIGHTING WAS DESIGNED BY OTHERS. SEE LANDSCAPE ARCHITECTS PLANS FOR EXTERIOR LIGHT FIXTURE SCHEDULE AND CONTACT INFORMATION.

KEYED # ELECTRICAL NOTES

1. PROVIDE CONCRETE TRANFORMER PAD, GROUNDING, METER RACK, AND BOLLARDS, IN ACCORDANCE WITH CPS ENERGY PROJECT SPECIFIC DETAILS AND STANDARDS.
2. PROVIDE FLOWABLE FILL ENCASED PRIMARY VOLTAGE DUCTBANK TO RISER POLE IN ACCORDANCE WITH CPS ENERGY PROJECT SPECIFIC DETAILS AND STANDARDS.
3. PROVIDE (2) 4" CONDUITS WITH PULL STRINGS TO RISER POLE FOR TELECOM CABLING. COORDINATE RISER POLE LOCATION WITH TELECOM UTILITY COMPANIES.
4. STUB UP TELECOM CONDUITS AT SERVER R0OM TERMINATION BOARD.
5. ALL EXTERIOR LIGHTING CIRCUIT SHALL BE SIZED C1N-20, THE CONNECTED LIGHT FIXTURE LOADS ARE VERY LOW. RUN A SINGLE C1N-20 HOMERUN FROM EACH TYPE OF LIGHT FIXTURE TO THE ELECTRICAL CLOSET FOR CONTROL BY THE LIGHTING CONTROL SYSTEM.

0' 10' 20' 40' 80' 160'

ProjectVerde
ENGINEERING
TX Registration No. F-19841
723 S. Flores,
San Antonio, Texas 78204

ISSUE/REVISIONS		
#	DESCRIPTION	DATE

SITE PLAN - ELECTRICAL

DUNAWAY
118 Broadway, Suite 201, San Antonio, Texas 78205
210.212.9000
(TX REG. F-1114)

muñoz
723 S. Flores • San Antonio, Texas 78204
210.349.1163 • www.munoz-co.com

WORLD HERITAGE CENTER
SAN ANTONIO, TEXAS

NOT FOR CONSTRUCTION
INTERIM REVIEW ONLY
DOCUMENT INCOMPLETE
NOT INTENDED FOR PERMITTING, BIDDING, OR CONSTRUCTION
JAMES M. DREWRY
TEXAS LIC. NO. 63513
November 23, 2021

JOB NO.	A19021.00
DESIGNED BY:	JDL
DRAWN BY:	JDL
CHECKED BY:	JDL
DATE:	12/01/2021
SHEET:	E-101

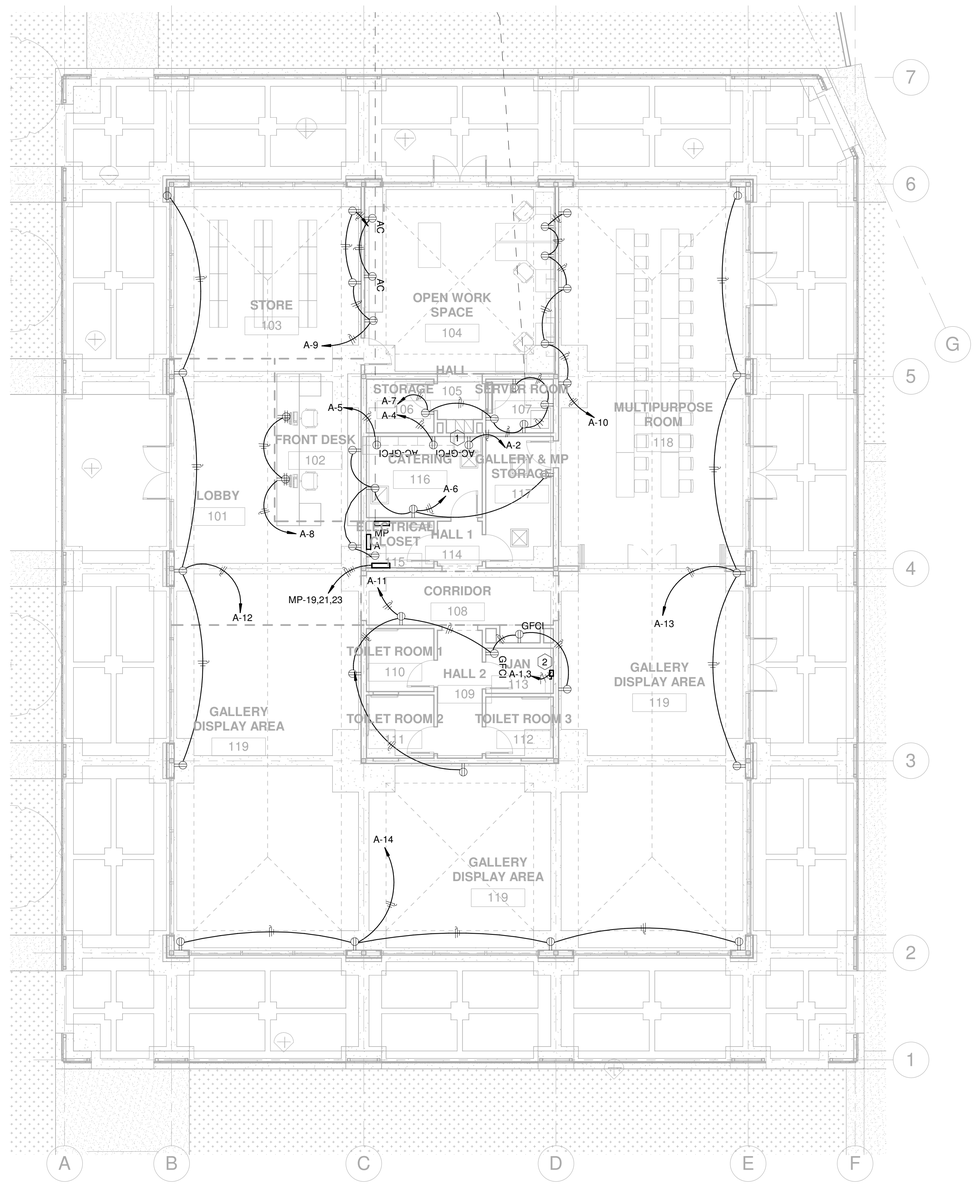

1 FLOOR PLAN - ELECTRICAL - POWER

1/8" = 1'-0"

GENERAL ELECTRICAL NOTES

1. SEE SHEET E-101 SITE PLAN FOR UNDERGROUND CONDUIT ROUTES TO PANEL MDP AND TO TELECOM SERVER ROOM.

KEYED # ELECTRICAL NOTES

1. PROVIDE 20A RECEPTACLE AT 42" AFF. CIRCUIT SHALL BE CONNECTED TO 20A GFCI CIRCUIT BREAKER.
2. PROVIDE 30A, 2-POLE SAFETY DISCONNECT, NF, HD, NEMA1 FOR WATER HEATER. PROVIDE EQUIPMENT CONNECTION TO WATER HEATER.

0' 2' 4' 8' 16' 32'

SCALE: 1/8" = 1' - 0"

ProjectVerde
ENGINEERING
TX Registration No. F-19841
723 S. Flores,
San Antonio, Texas 78204

ISSUE/REVISIONS		
#	DESCRIPTION	DATE

FLOOR PLAN - ELECTRICAL - POWER

WORLD HERITAGE CENTER
SAN ANTONIO, TEXAS

DUNAWAY
118 Broadway, Suite 201, San Antonio, Texas 78205
210.212.9505
(TX REG. F-1114)

muñoz
723 S. Flores • San Antonio, Texas 78204
210.349.1163 • www.munoz-co.com

NOT FOR CONSTRUCTION
INTERIM REVIEW ONLY
DOCUMENT INCOMPLETE
NOT INTENDED FOR PERMITTING, BIDDING, OR CONSTRUCTION
J. DUANE LETSON
TEXAS LIC. NO. 84711
December 23, 2021

JOB NO.	A19021.00
DESIGNED BY:	JDL
DRAWN BY:	JDL
CHECKED BY:	JDL
DATE:	12/01/2021
SHEET:	E-201

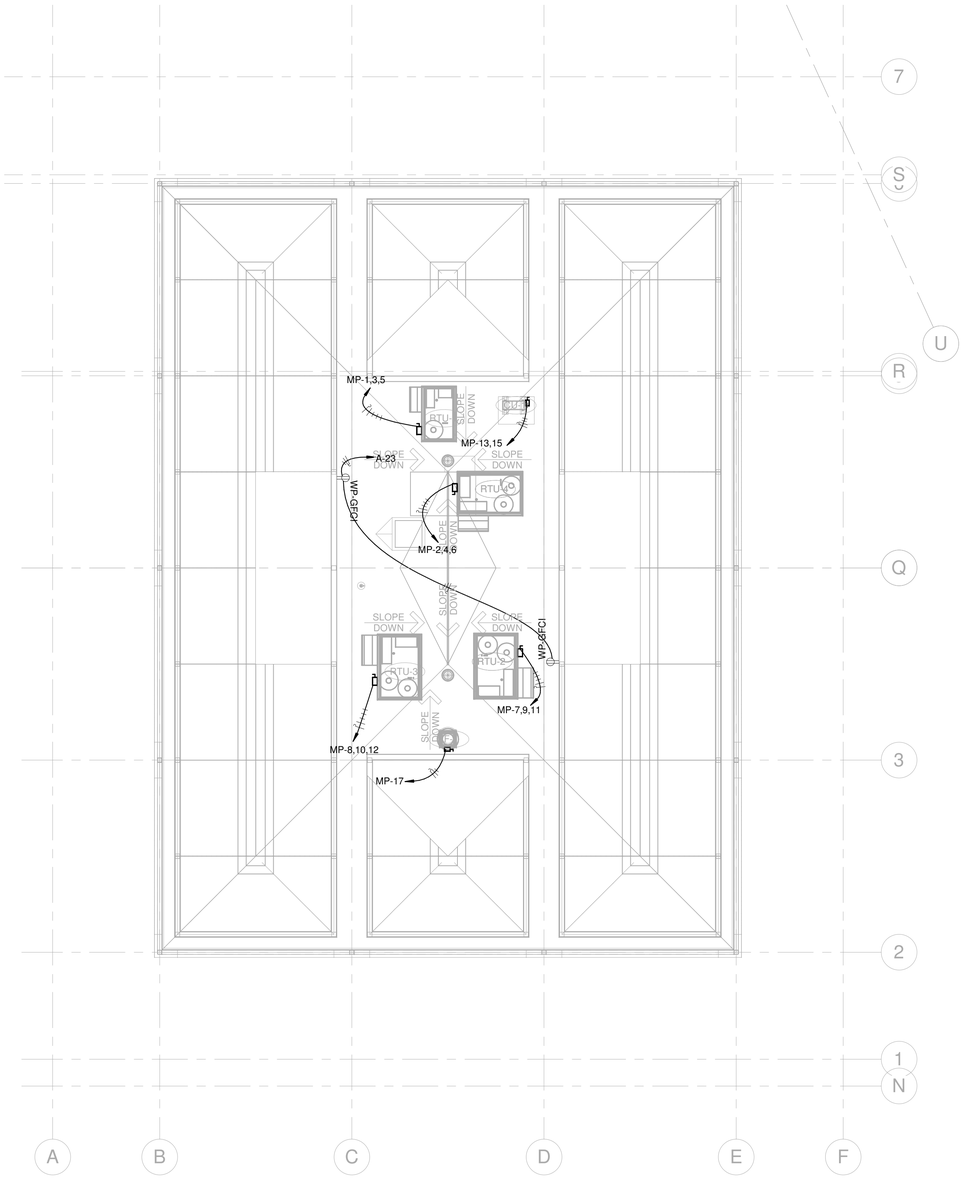

1 ROOF PLAN - ELECTRICAL - POWER
1/8" = 1'-0"

GENERAL ELECTRICAL NOTES

1.

KEYED # ELECTRICAL NOTES

1.

0' 2' 4' 8' 16' 32'
SCALE: 1/8" = 1' - 0"

ProjectVerde
ENGINEERING
TX Registration No. F-19841
723 S. Flores,
San Antonio, Texas 78204

#	DESCRIPTION	DATE

ISSUE/REVISIONS

FLOOR PLAN - ELECTRICAL - ROOF

WORLD HERITAGE CENTER
SAN ANTONIO, TEXAS

DUNAWAY
118 Broadway, Suite 201, San Antonio, Texas 78205
Tel: 210.227.2004
(TX REG. F-1114)

muñoz
723 S. Flores • San Antonio, Texas 78204
210.349.1163 • www.munoz-co.com

NOT FOR CONSTRUCTION
INTERIM REVIEW ONLY
DOCUMENT INCOMPLETE
NOT INTENDED FOR PERMITTING, BIDDING, OR CONSTRUCTION
J. DUANE LETSON
TEXAS LIC. NO. 84717
December 23, 2021

JOB NO.	A19021.00
DESIGNED BY:	JDL
DRAWN BY:	JDL
CHECKED BY:	JDL
DATE:	12/01/2021
SHEET:	E-202

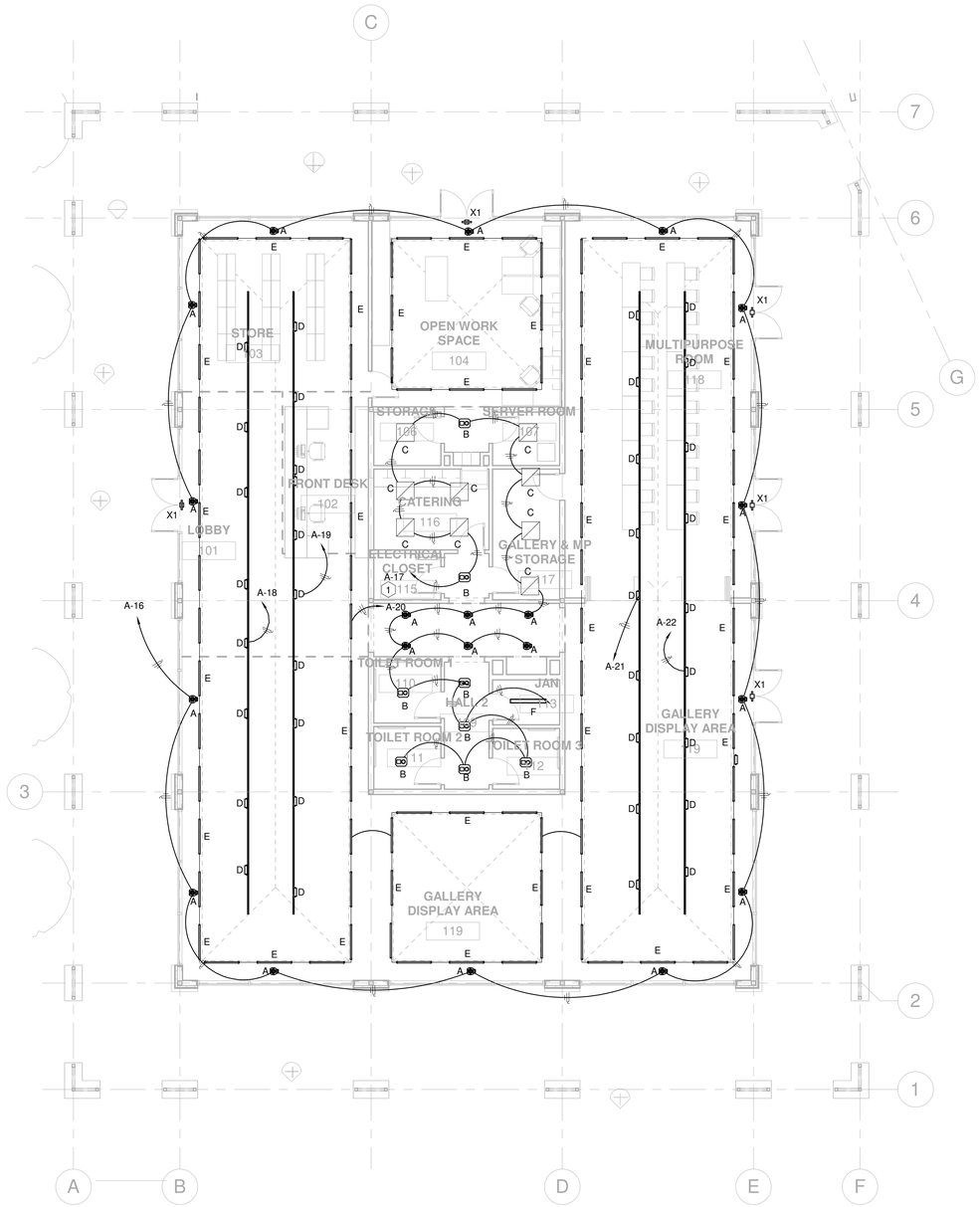

1 FLOOR PLAN - ELECTRICAL - LIGHTING
1/8" = 1'-0"

GENERAL ELECTRICAL NOTES

1. ALL LIGHTING CONTROLS SHALL COMPLY WITH IECC 2018. CONTACT BEN MATTHEWS AT 210-219-9070 FOR LUTRON CONTROLS DESIGN DOCUMENTS.

KEYED # ELECTRICAL NOTES

1. LIGHTING CONTROL RELAYS AND EMERGENCY LIGHTING INVERTER SHALL BE LOCATED IN THIS AREAS. REFER TO LUTRON LIGHTING CONTROLS DESIGN DOCUMENTS.

0' 2' 4' 8' 16' 32'
SCALE: 1/8" = 1' - 0"

ProjectVerde
ENGINEERING
TX Registration No. F-19841
723 S. Flores,
San Antonio, Texas 78204

#	DESCRIPTION	DATE

ISSUE/REVISIONS

FLOOR PLAN - ELECTRICAL - LIGHTING

WORLD HERITAGE CENTER
SAN ANTONIO, TEXAS

DUNAWAY
118 Broadway, Suite 201, San Antonio, Texas 78205
210.212.2004
(TX REG. F-1114)

muñoz
723 S. Flores • San Antonio, Texas 78204
210.349.1163 • www.munoz-co.com

NOT FOR CONSTRUCTION
INTERIM REVIEW ONLY
DOCUMENT INCOMPLETE
NOT INTENDED FOR PERMITTING, BIDDING, OR CONSTRUCTION
J. DUANE LETSON
TEXAS LIC. NO. 8471
November 23, 2021

JOB NO.	A19021.00
DESIGNED BY:	JDL
DRAWN BY:	JDL
CHECKED BY:	JDL
DATE:	12/01/2021
SHEET:	E-301

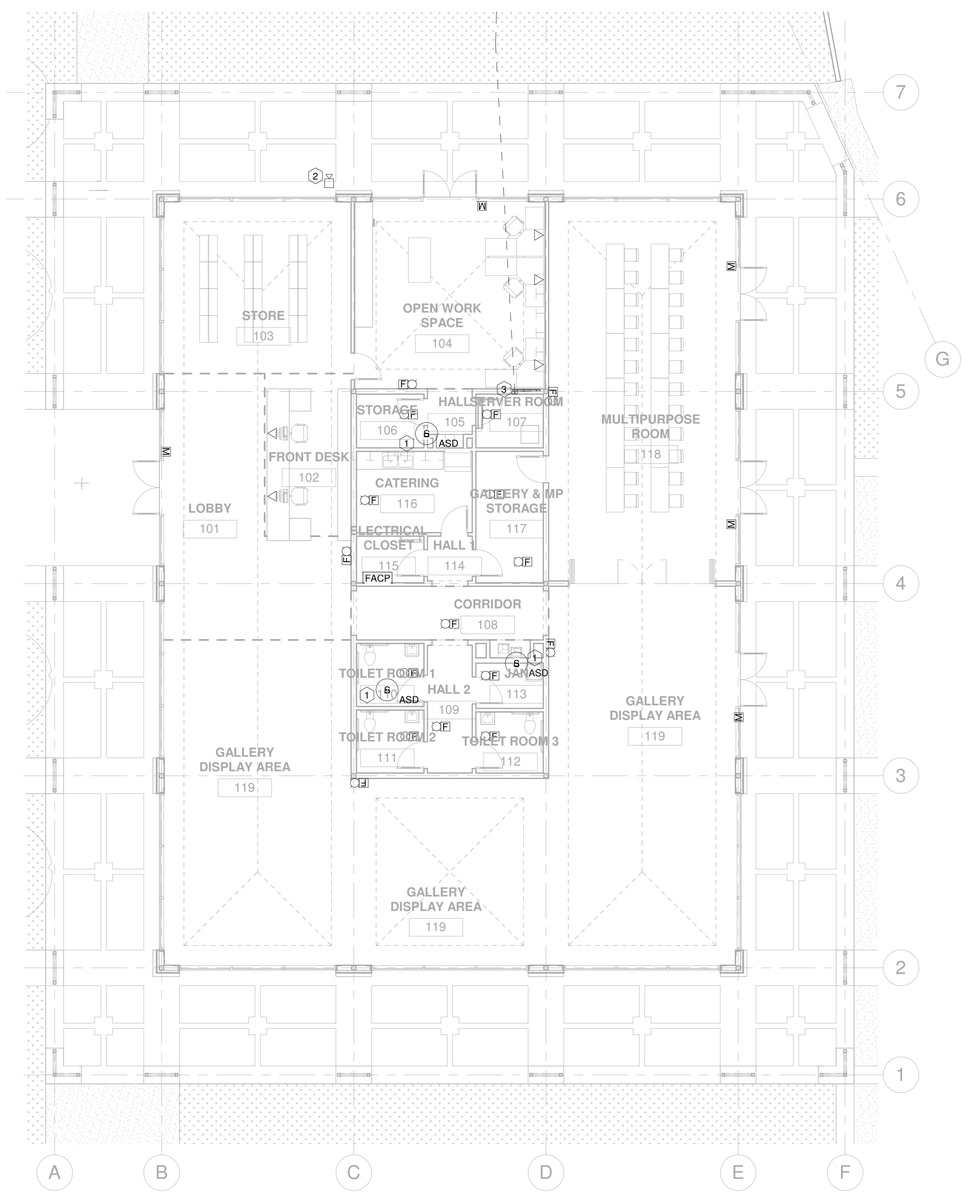

1 FLOOR PLAN - ELECTRICAL - SPECIAL SYSTEMS
1/8" = 1'-0"

GENERAL ELECTRICAL NOTES

1. IT IS THE INTENT OF THE CONSTRUCTION DOCUMENTS TO REQUIRE A STATE LICENSED FIRE ALARM CONTRACTOR TO PROVIDE A COMPLETE DESIGN AND INSTALLATION OF THE FIRE ALARM SYSTEM INCLUDING EQUIPMENT SELECTIONS AND CIRCUIT CALCULATIONS. THE ENGINEER'S DESIGN IS FOR SCHEMATIC REFERENCE ONLY.
2. ALL FIRE ALARM PLANNING SHALL BE SUPERVISED BY A STATE LICENSED FIRE ALARM PLANNING SUPERINTENDENT AND SHALL BE INSTALLED BY A CERTIFIED NICET LEVEL III (MINIMUM) TECHNICIAN.

KEYED (#) ELECTRICAL NOTES

1. PROVIDE FIRE ALARM AIR SAMPLING DUCT SMOKE DETECTOR IN THE RETURN DUCT OF THE ROOF TOP UNIT (RTU). PROVIDE RELAY CONTROLLED BY SMOKE DETECTOR AND WIRE THE RTU CONTROLS FOR SHUT DOWN OF THE UNIT.
2. PROVIDE FIRE ALARM WP HORN MOUNTED TO EXTERIOR OF BUILDING.

0' 2' 4' 8' 16' 32'
SCALE: 1/8" = 1' - 0"

ProjectVerde
ENGINEERING
TX Registration No. F-19841
723 S. Flores,
San Antonio, Texas 78204

#	ISSUE/REVISIONS DESCRIPTION	DATE

FLOOR PLAN - ELEC. - SPECIAL SYSTEMS

WORLD HERITAGE CENTER
SAN ANTONIO, TEXAS

DUNAWAY
118 Broadway, Suite 201, San Antonio, Texas 78205
(210) 227-2000
(TX REG. F-1114)

muñoz
723 S. Flores • San Antonio, Texas 78204
210.349.1163 • www.munoz-co.com

ISSUED FOR CONSTRUCTION
INTERIM REVIEW ONLY
DOCUMENT INCOMPLETE
NOT INTENDED FOR PERMITTING, BIDDING, OR CONSTRUCTION
J. DUANE LETSON
TEXAS LIC. NO. 84710
November 23, 2021

JOB NO.	A19021.00
DESIGNED BY:	JDL
DRAWN BY:	JDL
CHECKED BY:	JDL
DATE:	12/01/2021
SHEET:	E-501

Branch Panel: MP

Location: ELECTRICAL CLOSET 115
Supply From:
Mounting: Surface
Enclosure: Type 1

Volts: 120/208 Wye
Phases: 3
Wires: 4

A.I.C. Rating: 65K
Mains Type:
Mains Rating: 400 A
MCB Rating: 400 A

Notes:

CKT	Circuit Description	Circuit Mark	Trip	Poles	A		B		C		Poles	Trip	Circuit Mark	Circuit Description	CKT
1	RTU - 1	C3-50	50 A	3	588...	5880...					3	50 A	C3-50	RTU -4	2
3							5880...	5880...							4
5									5880...	588...					6
7	RTU - 2	C3-50	50 A	3	588...	5880...					3	50 A	C3-50	RTU - 3	8
9							5880...	5880...							10
11									5880...	588...					12
13	CU - 1	C2-20	20 A	2	187...	4675...					3	100 A	C3N-100	Panel A	14
15							1872...	3226...							16
17	EF - 1	C1N-1	20 A	1					56 VA	294...					18
19	5 kVA, 208Y/120 V, Three Phase, 4 Wires, Wye,Emergency Lighting Inverter	C3N-20	20 A	3	0 VA	0 VA					1	20 A		Spare	20
21							0 VA	0 VA			1	20 A		Spare	22
23									0 VA	0 VA	1	20 A		Spare	24
25	Spare		20 A	1	0 VA	0 VA					1	20 A		Spare	26
27	Spare		20 A	1			0 VA	0 VA			1	20 A		Spare	28
29	Spare		20 A	1					0 VA	0 VA	1	20 A		Spare	30
31															32
33															34
35															36
37															38
39															40
41															42
			Total Load:		30067 VA		28618 VA		26518 VA						
			Total Amps:		253 A		241 A		221 A						

Legend:

Load Classification	Connected Load	Demand Factor	Estimated Demand	Panel Totals	
Lighting	824 VA	100.00%	824 VA		
Receptacle	7740 VA	100.00%	7740 VA	**Total Conn. Load:**	85203 VA
Heating	0 VA	0.00%	0 VA	**Total Est. Demand:**	85217 VA
Cooling	74304 VA	100.00%	74304 VA	**Total Conn.:**	236 A
Kitchen Equipment - Non-Dwelling Unit	800 VA	100.00%	800 VA	**Total Est. Demand:**	237 A
Motor	56 VA	125.00%	70 VA		
Elevator	0 VA	0.00%	0 VA		
Other	1500 VA	100.00%	1500 VA		

Notes:

Branch Panel: A

Location: ELECTRICAL CLOSET 115
Supply From: MP
Mounting: Recessed
Enclosure: Type 1

Volts: 120/208 Wye
Phases: 3
Wires: 4

A.I.C. Rating: 22K AIC
Mains Type:
Mains Rating: 100 A
MCB Rating:

Notes:

CKT	Circuit Description	Circuit Mark	Trip	Poles	A		B		C		Poles	Trip	Circuit Mark	Circuit Description	CKT
1	Water Heater	C2-20	20 A	2	750...	800 VA					1	20 A	C1N-20	Refrigerator, GFCI circuit breaker	2
3							750 VA	180 VA			1	20 A	C1N-20	Receptacle	4
5	Receptacle	C1N-20	20 A	1					180 VA	180...	1	20 A	C1N-20	Receptacles	6
7	Receptacles	C1N-20	20 A	1	900...	720 VA					1	20 A	C1N-20	Receptacles	8
9	Receptacles	C1N-20	20 A	1			900 VA	1080...			1	20 A	C1N-20	Receptacles	10
11	Receptacles	C1N-20	20 A	1					1080...	720...	1	20 A	C1N-20	Receptacles	12
13	Receptacles	C1N-20	20 A	1	720...	720 VA					1	20 A	C1N-20	Receptacles	14
15	Exterior Lighting	C1N-20	20 A	1			250 VA	0 VA			1	20 A	C1N-20	Down Lighting	16
17	Core Lighting	C1N-20	20 A	1					432 VA	33 VA	1	20 A	C1N-20	Track Lighting	18
19	Track Lighting	C1N-20	20 A	1	33 VA	32 VA					1	20 A	C1N-20	Up - Lighting	20
21	Track Lighting	C1N-20	20 A	1			33 VA	33 VA			1	20 A	C1N-20	Track Lighting	22
23	Receptacles Rooftop	C1N-20	20 A	1					360 VA	0 VA	1	20 A		Spare	24
25	Spare		20 A	1	0 VA	0 VA					1	20 A		Spare	26
27	Spare		20 A	1			0 VA	0 VA			1	20 A		Spare	28
29	Spare		20 A	1					0 VA	0 VA	1	20 A		Spare	30
31															32
33															34
35															36
37															38
39															40
41															42
			Total Load:		4675 VA		3226 VA		2948 VA						
			Total Amps:		39 A		27 A		25 A						

Legend:

Load Classification	Connected Load	Demand Factor	Estimated Demand	Panel Totals	
Lighting	824 VA	100.00%	824 VA		
Receptacle	7740 VA	100.00%	7740 VA	**Total Conn. Load:**	10844 VA
Heating	0 VA	0.00%	0 VA	**Total Est. Demand:**	10844 VA
Cooling	0 VA	0.00%	0 VA	**Total Conn.:**	30 A
Kitchen Equipment - Non-Dwelling Unit	800 VA	100.00%	800 VA	**Total Est. Demand:**	30 A
Motor	0 VA	0.00%	0 VA		
Elevator	0 VA	0.00%	0 VA		
Other	1500 VA	100.00%	1500 VA		

Notes:

FEEDER AND BRANCH CIRCUIT SCHEDULE - COPPER CONDUCTORS WITH THHN/THWN INSULATION

CIRCUIT MARK	NOMINAL AMPS	QTY OF CONDUITS	CONDUIT SIZE (IN.)	QTY OF COND. PER CONDUIT	CONDUCTOR SIZE	QTY OF NEUT. PER CONDUIT	NEUTRAL SIZE	QTY OF GND. PER CONDUIT	SIZE OF GND. CONDUCTOR
One Phase Conductor with Neutral and Ground									
C1N-20	20	ONE	1/2"	1	# 12	1	# 12	1	# 12
C1N-30	30	ONE	3/4"	1	# 10	1	# 10	1	# 10
C1N-50	50	ONE	3/4"	1	# 8	1	# 8	1	# 10
Two Phase Conductors with Neutral and Ground									
C2N-20	20	ONE	1/2"	2	# 12	1	# 12	1	# 12
C2N-30	30	ONE	3/4"	2	# 10	1	# 10	1	# 10
C2N-50	50	ONE	3/4"	2	# 8	1	# 8	1	# 10
Two Phase Conductors with Ground (No Neutral)									
C2-20	20	ONE	1/2"	2	# 12			1	# 12
C2-30	30	ONE	3/4"	2	# 10			1	# 10
C2-50	50	ONE	3/4"	2	# 8			1	# 10
Three Phase Conductors with Neutral and Ground									
C3N-20	20	ONE	1/2"	3	# 12	1	# 12	1	# 12
C3N-30	30	ONE	3/4"	3	# 10	1	# 10	1	# 10
C3N-50	50	ONE	1"	3	# 8	1	# 8	1	# 10
C3N-60	60	ONE	1"	3	# 6	1	# 6	1	# 10
C3N-80	80	ONE	1-1/4"	3	# 4	1	# 4	1	# 8
C3N-100	100	ONE	1-1/4"	3	# 3	1	# 3	1	# 8
Three Phase Conductors with Ground (no Neutral)									
C3-20	20	ONE	1/2"	3	# 12			1	# 12
C3-30	30	ONE	3/4"	3	# 10			1	# 10
C3-50	50	ONE	3/4"	3	# 8			1	# 10
C3-60	60	ONE	1"	3	# 6			1	# 10
C3-80	80	ONE	1-1/4"	3	# 4			1	# 8

ProjectVerde
ENGINEERING
TX Registration No. F-19841
723 S. Flores,
San Antonio, Texas 78204

#	DESCRIPTION	DATE

ISSUE/REVISIONS

ELECTRICAL - PANEL SCHEDULES

WORLD HERITAGE CENTER
SAN ANTONIO, TEXAS

DUNAWAY
118 Broadway, Suite 201, San Antonio, Texas 78205
210.225.1031
(TX REG. F-1114)

muñoz
723 S. Flores • San Antonio, Texas 78204
210.349.1163 • www.munoz-co.com

NOT FOR CONSTRUCTION
INTERIM REVIEW ONLY
DOCUMENT INCOMPLETE
NOT INTENDED FOR PERMITTING, BIDDING, OR CONSTRUCTION
J. DUANE LETSON
TEXAS LIC. NO. 8471
November 23, 2021

JOB NO.	A19021.00
DESIGNED BY:	JDL
DRAWN BY:	JDL
CHECKED BY:	JDL
DATE:	12/01/2021
SHEET:	E-601

LED INTERIOR LIGHT FIXTURE SCHEDULE

Tag Mark	Description	Manufacturer	Model Number	Lumens	Color Temperature	Finish	Wattage	Input Voltage	Control Type	Comment
A	1/2" DOWNLIGHT	CSL	WS-IC-XX-90-S1/WS-PAN	1100	TBD	NA	16.1	120-277	0-10	
B	4" DOWNLIGHT	HE Williams	4DR-TL-I20-9/XX/DIM1-UNV-RW-OF-WH-N-F1	2000	TBD	WHITE	19.8	120-277	0-10	
C	2X2 FLAT PANEL	HE Williams	LP-22-L40-8-XX-DIM-UNV	4000	TBD	WHITE	39.2	120-277	0-10	
D	TRACK LIGHTING	CORONET	MAG-SPT-LRG-XX-LTG3 XX	1040	TBD	TBD	17	120-277	0-10	
E	LED TAPE IN ANGLED EXTRUSION	NOVAFLEX	NF-D5-O-240-24V-XXXX/ANGLED 3030 - CR/NF-PS-MAXX-288W-24V-0/10V	577/FT	TBD	NA	6.6W/FT	120-277	0-10	
F	4' LED STRIP	HE Williams	75S-4-L50-8-4000-DIM-UNV	5000	TBD	TBD	33	120-277	0-10	
X1	EXIT LIGHT	MULE	PVT-UM-G-S/R-XX	NA	NA	NA	3	120-277	NA	

LIGHTING FUNCTIONAL TESTING/PRE-COMMISSIOING PLAN

THE CONTRACTOR SHALL COMPLETE THE TASKS BELOW TO PRE-COMMISSION THE LIGHTING CONTROL SYSTEM AND SUBMIT WRITTEN DOCUMENTATION DETAILING THE TASKS BELOW. FOR EACH TASK, LIST THE DATE PERFORMED, PERSON COMPPLETING THE TASK, THE INITIAL SETTING/CONDITION,, ACTONS PERFORMED, AND FINAL SETTING CONDITION. SUBMIT DOCCUMENTATION AT OR BEFORE SUBSTANTIAL COMPLETION TO FACILITATE OBTAINING THE CERTIFICATE OF OCCUPANCY. PROVIDE COPIES OF THE PRE-COMMISSIONING REPORT TO THE ENGINEER OF RECORD AND TO THE ARCHITECT.

1. ENSURE ALL LIGHT FIXTURES ARE FUNCTIONAL.
2. TEST ALL EXIT SIGNS, EMERGENCY LIGHT FIXTURES, AND EMERGENCY BATTTERY UNITS .
3. VERIFY ALL OCCUPANCY SENSORS HAVE BEEN LOCATED AND AIMED PER THE MANUFACTURER'S INSTRUCTIONS.
4. SET OCCUPANCY SENSORS TIME DELAY SETTINGS IN ACCORDANCE WITH THE MANFACTURER'S INSTRUCTIONS.
5. TEST ALL OCCUPANCY SENSORS FOR MOTION COVERAGE AND CORRECT TIME DELAY.
6. WHERE DIMMING CONTROLS ARE PROVIDED TEST THE CONTROLS FOR FULL RANGE OF DIMMING.

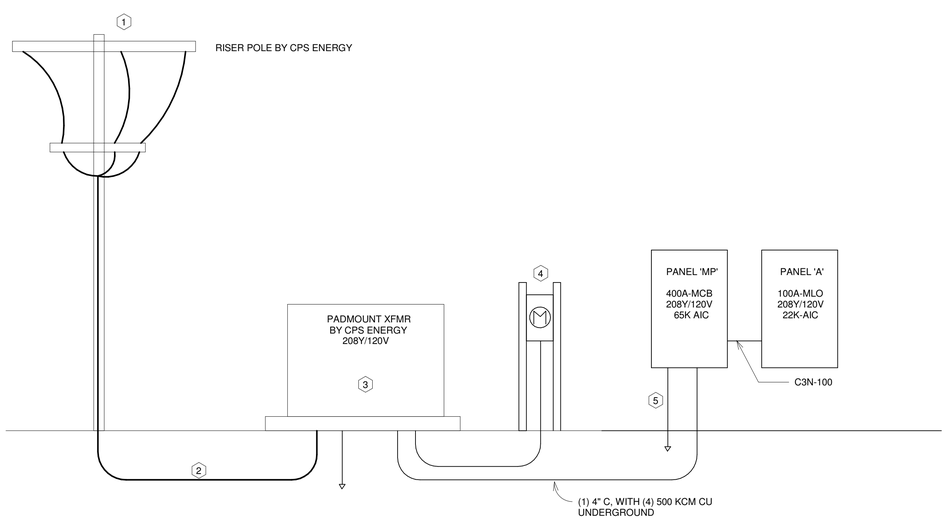

1 ONE-LINE DIAGRAM
1/4" = 1'-0"

GENERAL ELECTRICAL NOTES

1. THE CONTRACTOR SHALL COORDINATE UNDERGROUND PADMOUNT SERVICE WITH CPS REPRESENTATIVE. INSTALL UNDERGROUND DUCTBANK AND TRANSFORMER PAD IN ACCORDANCE WITH CPS ELECTRIC SERVICE STANDARDS AND PROJECT SPECIFIC DRAWINGS AND SPECIFICATIONS FURNISHED BY CPS.

KEYED (#) ELECTRICAL NOTES

1. COORDINATE LOCATION OF RISER POLE WITH CPS ENERGY.
2. PROVIDE PRIMARY VOLTAGE DUCTBANK IN ACCORDANCE WITH CPS ENERGY PROJECT SPECIFIC DIAGRAMS AND ELECTRIC SERVICE STANDARDS.
3. PROVIDE CONCRETE PAD, GROUND RODS, AND CONDUIT STUB UPS IN ACCORDANCE WITH CPS ENERGY PROJECT SPECIFIC DIAGRAMS AND ELECTRIC SERVICE STANDARDS.
4. PROVIDE GALVANIZED STEEL RACK FOR METER IN ACCORDANCE WITH PROJECT SPECIFIC DIAGRAMS AND ELECTRIC SERVICE STANDARDS.
5. PROVIDE 5/8" COPPER CLAD STEEL GROUND ROD AND #2 CU GROUNDING ELECTRODE CONDUCTOR AND CONNECTION TO BUILDING STEEL.

ProjectVerde
ENGINEERING
TX Registration No. F-19841
723 S. Flores,
San Antonio, Texas 78204

#	ISSUE/REVISIONS DESCRIPTION	DATE

ELECTRICAL - ONE-LINE DIAGRAM

WORLD HERITAGE CENTER
SAN ANTONIO, TEXAS

DUNAWAY
118 Broadway, Suite 201, San Antonio, Texas 78205
(210) 227-2000
(TX REG. F-1114)

muñoz
723 S. Flores • San Antonio, Texas 78204
210.349.1163 • www.munoz-co.com

NOT FOR CONSTRUCTION
INTERIM REVIEW ONLY
DOCUMENT INCOMPLETE
NOT INTENDED FOR PERMITTING, BIDDING, OR CONSTRUCTION
J. DUANE LETSON
TEXAS LIC. NO. 84710
November 23, 2021

JOB NO.	A19021.00
DESIGNED BY:	JDL
DRAWN BY:	JDL
CHECKED BY:	JDL
DATE:	12/01/2021
SHEET:	E-701

PLUMBING SYMBOLS AND ABBREVIATIONS

(NOT ALL OF THE SYMBOLS SHOWN MAY BE USED ON THE PROJECT.)

SYMBOL	DESCRIPTION	ABBREVIATION
SD	STORM DRAIN, RAINWATER DRAIN	SD, RD
SSD	SUBSOIL DRAIN, FOOTING DRAIN	SSD
GW	GREASE WASTE	GREASE WASTE
SS	SOIL, WASTE, OR SANITARY SEWER	S, W, SAN, SS
	VENT	V
AW	ACID WASTE	AW
AV	ACID VENT	AV
D	INDIRECT DRAIN	D
PD	PUMP DISCHARGE LINE	PD
RD	ROOF DRAIN	RD
ORD	OVERFLOW ROOF DRAIN	ORD
	COLD WATER	CW
	HOT WATER SUPPLY (120°)	HW
140°	HOT WATER SUPPLY (140°)	140 °
	HOT WATER RETURN (120°)	HWR
140R	HOT WATER RETURN (140°)	140°R
TW	TEMPERED HOT WATER (TEMP.°F)	TEMP, HW,TW
TWR	TEMPERED HOT WATER RETURN (TEMP.°F)	TEMP, HWR,TWR
DWS	(CHILLED) DRINKING WATER SUPPLY	DWS
DWR	(CHILLED) DRINKING WATER RECIRCULATING	DWR
SW	SOFT WATER	SW
CD	CONDENSATE DRAIN	CD
DI	DISTILLED WATER	DI
DE	DEIONIZED WATER	DE
	PIPING TO BE HEAT TRACED	-
LS	LAWN SPRINKLER SUPPLY	LS
F	FIRE PROTECTION WATER SUPPLY	F
SP	AUTOMATIC FIRE SPRINKLER	SP
G	GAS-LOW-PRESSURE	G
MG	GAS-MEDIUM-PRESSURE	MG
HG	GAS-HIGH-PRESSURE	HG
GV	GAS VENT	GV
FOS	FUEL OIL SUPPLY	FOS
FOR	FUEL OIL RETURN	FOR
FOV	FUEL OIL VENT	FOV
LO	LUBRICATING OIL	LO
LOV	LUBRICATING OIL VENT	LOV
WO	WASTE OIL	WO
WOV	WASTE OIL VENT	WOV
OX	OXYGEN	OX
LOX	LIQUID OXYGEN	LOX
A	COMPRESSES AIR	A
A 150#	COMPRESSED AIR 150 PSI	150 PSI
CO_2	CARBON DIOXIDE	CO_2

SYMBOL	DESCRIPTION	ABBREVIATION
	GATE VALVE	GV
	GLOBE VALVE	GV
	ANGLE VALVE	AV
	BALL VALVE	BV
	BUTTERFLY VALVE	BFV
	BALANCING VALVE (SPECIFY TYPE)	BV
	CHECK VALVE	CV
AP	ACCESS PANEL LOCATION	AP
P-1A	PLUMBING FIXTURE DESIGNATION	-.
PR	PRESSURE-REDUCING VALVE	-
	PRESSURE-RELIEF VALVE	-
TP	TEMPERATURE-PRESSURE-RELIEF VALVE	TP
RZBP	REDUCED ZONE BACKFLOW PREVENTER	RZBPHB
HB	HOSE BIBB	HB
WH	RECESSED-BOX HOSE BIBB OR WALL HYDRANT	WH
	VALVE IN YARD BOX (VALVE TYPE SYMBOL AS REQUIRED FOR VALVE USE)	YB
	UNION (SCREW)	-
	UNION (FLANGED)	-
	STRAINER (SPECIFY TYPE)	-
	PIPE ANCHOR	-
	PIPE GUIDE	-
	EXPANSION JOINT	
	FLEXIBLE CONNECTOR	
	TEE	-
	SIAMESE FIRE DEPARTMENT CONNECTION	FH
F	FREESTANDING SIAMESE FIRE DEPARTMENT CONNECTION	FDC
	WALL (SPECIFY NUMBERS AND SIZE OF OUTLETS)	FDC
TP	TRAP PRIMER	TP
	CONCENTRIC REDUCER	-
	ECCENTRIC REDUCER	-
GWH-1	EQUIPMENT DESIGNATION (GAS WATER HEATER #1)	-
P-1	NEW PLUMBING FIXTURE DESIGNATION	-
	EXISTING PLUMBING FIXTURE TO BE REMOVED	-
1	PLUMBING KEYED NOTE	-
	AQUASTAT	-
TS	TAMPER SWITCH	TS
FS	FLOW SWITCH	FS
PS	PRESSURE SWITCH	PS
"A"	WATER HAMMER ARRESTOR (PDI DESIGNATION "A")	WHA
	PRESSURE GAUGE WITH GAUGE COCK	PG
	THERMOMETER (SPECIFY TYPE)	-
AV	AUTOMATIC AIR VENT	AAV
	CIRCUIT SETTER	CS
	VALVE IN RISER (TYPE AS SPECIFIED OR NOTED)	-
	RISER DOWN (ELBOW)	-
	RISER (ELBOW)	-
	AIR CHAMBER	AC
	RISER OR DROP	-
	BRANCH-BOTTOM CONNECTION	-
	BRANCH-SIDE CONNECTION	-
	CAP ON END PIPE	CAP

SYMBOL	DESCRIPTION	ABBREVIATION
FHR	FIRE HOSE RACK	FHR
AS	AUTOMATIC SPRINKLER PIPE	-
DPS	DRY PIPE SPRINKLER	-
PRA	PREACTION SPRINKLER PIPE	-
	FIRE HOSE VALVE	FHV
	FIRE HOSE CABINET (SURFACE-MOUNTED)	FHC
	FIRE HOSE CABINET (RECESSED)	FHC
CO CO	CLEANOUT PLUG	CO
CO	FLOOR CLEANOUT	FCO
WCO	WALL CLEANOUT	WCO
CO	YARD CLEANOUT OR CLEANOUT TO GRADE	WCO
FD	FLOOR DRAIN WITH P-TRAP	FD
	PITCH DOWN OR UP-IN DIRECTION OF ARROW	-
	FLOW-IN DIRECTION OF ARROW	-
	POINT OF CONNENTION	POC
F&T	STEAM TRAP (ALL TYPES)	FDD
		FS
FFD	FUNNEL FLOOR DRAIN	FS
	FLOOR SINK (3/4 GRATE)	-
	FLOOR SINK (1/2 GRATE)	-
S 1	SOIL/VENT STACK DESIGNATION	-
1 P-3	REFERENCE: DETAIL NUMBER REFERENCE: SHEET NUMBER	-
	UPRIGHT SPRINKLER	-
	PENDENT SPRINKLER	-
	UPRIGHT SPRINKLER, NIPPLED UP	
	PENDENT SPRINKLER, ON DROP NIPPLED	
	SIDEWALL SPRINKLER	
	PIPE HANGER	
	ALARM CHECK VALVE ASSEMBLY	
	DDRY PIPE VALVE ASSEMBLY	
	DELUGE VALVE ASSEMBLY	
	PREACTION VALVE ASSEMBLY	
FH	EXISTING FIRE HYDRANT	
FH	NEW FIRE HYDRANT	
	WALL HYDRANT, TWO HOSE OUTLETS	
	SIAMESE FIRE DEPARTMENT CONNECTION	
F	FREESTANDING SIAMESE FIRE DEPARTMENT CONNECTION	
	WALL (SPECIFY NUMBERS AND SIZE OF OUTLETS)	
FP/JP	FIRE PUMP / JOCKEY PUMP	
TP	TRAP PRIMER	
PG	PROPANE GAS	

ABBREVIATION

A

AFF	ABOVE FINISHED FLOOR
AC	ABOVE CEILING
ACU	AIR-CONDITIONING UNIT(S)
AHU	AIR HANDLING UNIT
AHP	AIR HORSEPOWER
AC	ALTERNATING CURRENT
ALT	ALTITUDE
AMB	AMBIENT
ANSI	AMERICAN NATIONAL STANDARDS INSTITUTE
AWG	AMERICAN WIRE GAUGE
AMP	AMPERE (AMP, AMPS)
ANG	ANGLE
ANGI	ANGLE OF INCIDENCE
ADP	APPARATUS DEW POINT
APPROX	APPROXIMATE
A	AREA
ATM	ATMOSPHERERE
AVG	AVERAGE

B

BF	BELOW FLOOR
BG	BELOW GRADE
BHP	BRAKE HORSEPOWER
BTU	BRITISH THERMAL UNIT

C

°C	CELSIUS
C TO C	CENTER TO CENTER
CKT	CIRCUIT
CCW	COUNTERCLOCKWISE
FT^3	CUBIC FEET
IN^3	CUBIC INCH
CFM	CUBIC FEET PER MINUTE
SCFM	CFM, STANDARD CONDITIONS
SCFS	CUBIC FT PER SEC, STANDARD

D

DIA	DIAMETER
ID	DIAMETER, INSIDE
OD	DIAMETER, OUTSIDE
DIFF	DIFFERENCE OR DELTA
DC	DIRECT CURRENT
-	DRY
DBT	DRY-BULB TEMPERATURE

E

EFF	EFFICIENCY
ELEV	ELEVATION
EVAP	EVAPORATE (-E, -ING, -ED, -OR)
EXP	EXPANSION

F

°F	FAHRENHEIT
FPM	FEET PER MINUTE
FPS	FEET PER SECOND
FT	FOOT - FEET
FTLB	FOOT - POUND
HZ	FREQUENCY

G

GA	GAGE OR GAUGE
GAL	GALLONS
GPH	GALLONS PER HOUR
STD GPH	GPH, STANDARD
GPD	GALLONS PER DAY
GR	GRAINS

H

HD	HEAD
HT	HEAT
HTR	HEATER
HGT	HEIGHT
HPS	HIGH-PRESSURE STEAM
HTHW	HIGH-TEMERATURE HOT WATER
HP	HORSEPOWE
H	HOUR(S)

I

IPS	INTERNATIONAL PIPE STD
IPS	IRON PIPE SIZE

K

K	KELVIN
KW	KILOWATT
KWH	KILOWATT HOUR

L

LG	LENGHT
LIN FT	LINEAR FEET
LIQ	LIQUID
LPS	LOW-PRESSURE STEAM

ABBREVIATION

M

MAX	MAXIMUM
MPS	MEDIUM-PRESSURE STEAM
MTHW	MEDIUM-TEMPERATURE HOT WATER
HG	MERCURY
MPH	MILES PER HOUR
MIN	MINIMUM

N

NC	NORMALLY CLOSED
NO	NORMALLY OPEN
NA	NOT APPLICABLE
NIC	NOT IN CONTRACT
NO	NUMBER

O

OZ	OUNCE
OA	OUTSIDE AIR

P

PPM	PARTS PER MILLION
%	PERCENT
PH	
PIPE	PIPE
LB	POUNDS PER SQUARE
PSF	POUNDS PER SQUARE FOOT
PSI	POUNDS PER SQUARE INCH
PSIA	POUNDS PER SQUARE INCH ABSOLUTE
PSIG	POUNDS PER SQUARE INCH GAGE
PRESS	PRESSURE

Q

QT	QUART

R

R	RADIUS
RCVR	RECEIVER
RECIRC	RECIRCULATE
REV	REVOLUTIONS
RPM	REVOLUTIONS PER MINUTE
RPS	REVOLUTIONS PER SECOND

S

S	SECOND
SPEC	SPECIFICATION
SQ	SQUARE
STD	STANDARD
SP	STATIC PRESSURE
SUCT	SUCTION
SUM	SUMM (-ER, -ARY, -ATION)
SPLY	SUPPY
SYS	SYSTEM

T

TAB	TABULAT (-E, -ION)
TEE	TEE
TEMP	TEMPERATURE
TD	TEMPERATURE DIFFERENCE
TSTAT	THERMOSTAT
THKNS	THICK (-NESS)
MCM	THOUSAND CIRCULAR MILES
MCF	THOUSAND CUBIC FEET
KIP FT	THOUSAND FOOT-POUNDS
KIP	THOUSAND POUNDS
TON	TON

U

U	U-FACTOR
UNIT	UNIT

V

VAC	VACUUM
V	VALVE
VAR	VARIABLE
VAV	VARIABLE AIR VOLUME
VEL	VELOCITY
VENT	VENTILATION, VENT
VERT	VERTICAL
V	VOLT
VOL	VOLUME

W

WAL	WALL
WTR	WATER
W	WATT
WH	WATT-HOUR
WT	WEIGHT

Y

YD	YARD
YR	YEAR

Z

Z	ZONE

ProjectVerde
ENGINEERING
TX Registration No. F-19841
723 S. Flores,
San Antonio, Texas 78204

#	ISSUE/REVISIONS DESCRIPTION	DATE

PLBG. SYMBOLS, ABBREV. & GEN. NOTES

WORLD HERITAGE CENTER
SAN ANTONIO, TEXAS

DUNAWAY
118 Broadway, Suite 201, San Antonio, Texas 78205
210.225.2500
(TX REG. F-1114)

muñoz
723 S. Flores • San Antonio, Texas 78204
210.349.1163 • www.munoz-co.com

NOT FOR CONSTRUCTION
INTERIM REVIEW ONLY
DOCUMENT INCOMPLETE
NOT INTENDED FOR PERMITTING, BIDDING, OR CONSTRUCTION
JAMES M. DREWRY
TEXAS LIC. NO. 63519
November 23, 2021

JOB NO.	A19021.00
DESIGNED BY:	RLM
DRAWN BY:	RLM
CHECKED BY:	JMD
DATE:	12/1/2021
SHEET:	P-001

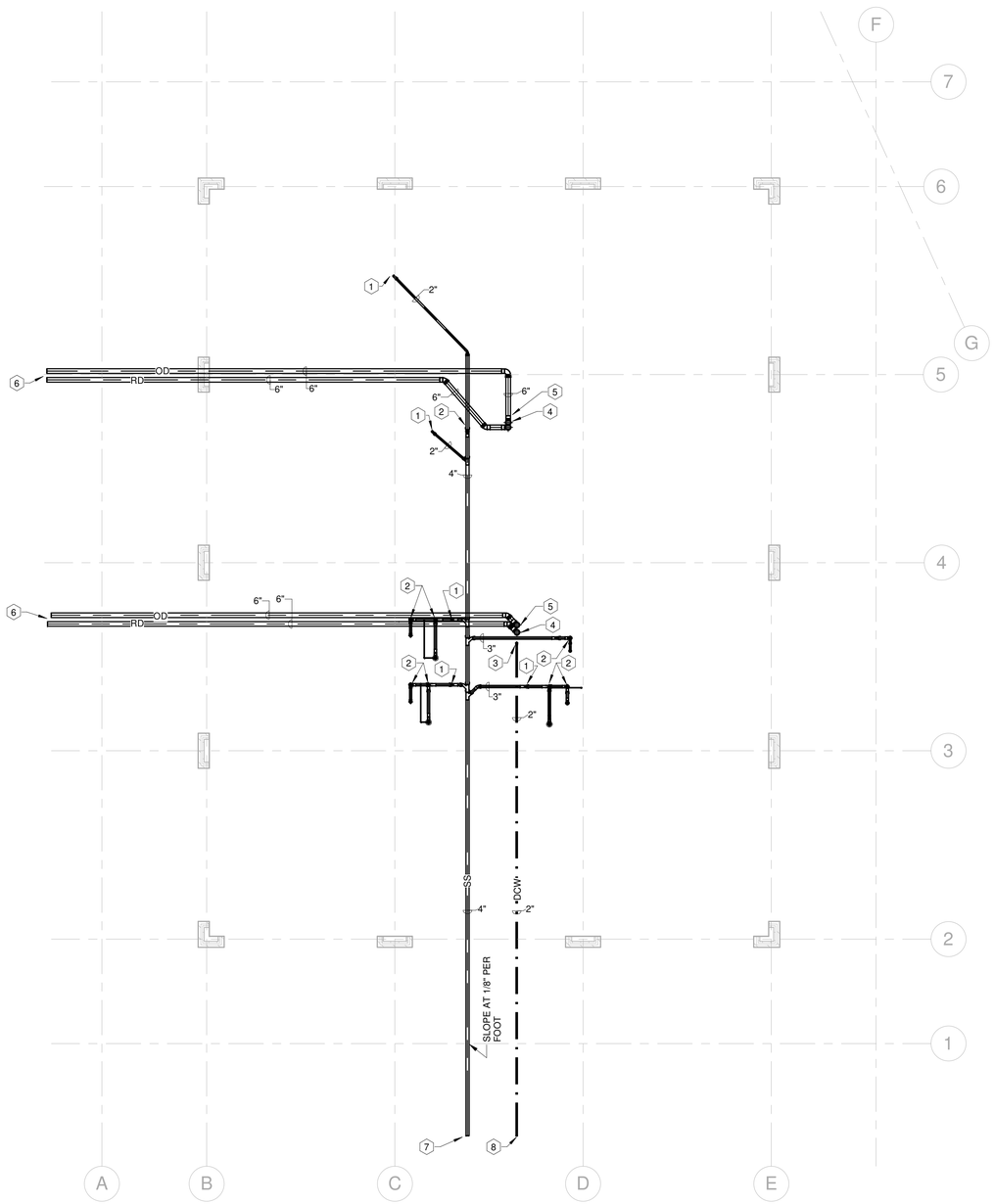

KEYED # NOTES:

1. 2" WASTE DOWN FROM PLUMBING FIXTURE.
2. 3" WASTE DOWN FROM PLUMBING FIXTURE.
3. 2" COLD WATER UP FROM BELOW.
4. 6" ROOF DRAIN DOWNSPOUT FROM ROOF DRAIN.
5. 6" OVERFLOW DRAIN DOWNSPOUT FROM OVERFLOW DRAIN.
6. 6" STORM DRAIN PRIMARY AND SECONDARY PIPES STUB-OUT 5'-0" FROM BUILDING FOR ROOF AREA (3,150 SQUARE FEET).
7. 4" SANITARY SEWER PIPE STUB-OUT 5'-0" FROM BUILDING, ESTIMATE DEMAND LOAD IS 24.5 FIXTURE UNITS.
8. 2" COLD WATER PIPE ENTRY STUB-OUT 5'-0" FROM BUILDING, ESTIMATE DEMAND LOAD IS 38.5 FIXTURE UNITS @ 46 GPM.

1 UNDERFLOOR PLAN - PLUMBING
1/8" = 1'-0"

0' 2' 4' 8' 16' 32'
SCALE: 1/8" = 1' - 0"

ProjectVerde
ENGINEERING
TX Registration No. F-19841
723 S. Flores,
San Antonio, Texas 78204

#	DESCRIPTION	DATE

ISSUE/REVISIONS

UNDERFLOOR PLAN - PLUMBING

WORLD HERITAGE CENTER
SAN ANTONIO, TEXAS

DUNAWAY
118 Broadway, Suite 201, San Antonio, Texas 78205
(TBPE Firm #2024)
(TX REG. F-1114)

muñoz
723 S. Flores • San Antonio, Texas 78204
210.349.1163 • www.munoz-co.com

NOT FOR CONSTRUCTION
INTERIM REVIEW ONLY
DOCUMENT INCOMPLETE
NOT INTENDED FOR PERMITTING, BIDDING, OR CONSTRUCTION
JAMES M. DREWRY
TEXAS LIC. NO. 63514
November 23, 2021

JOB NO.	A19021.00
DESIGNED BY:	RLM
DRAWN BY:	RLM
CHECKED BY:	JMD
DATE:	12/1/2021
SHEET:	P-200

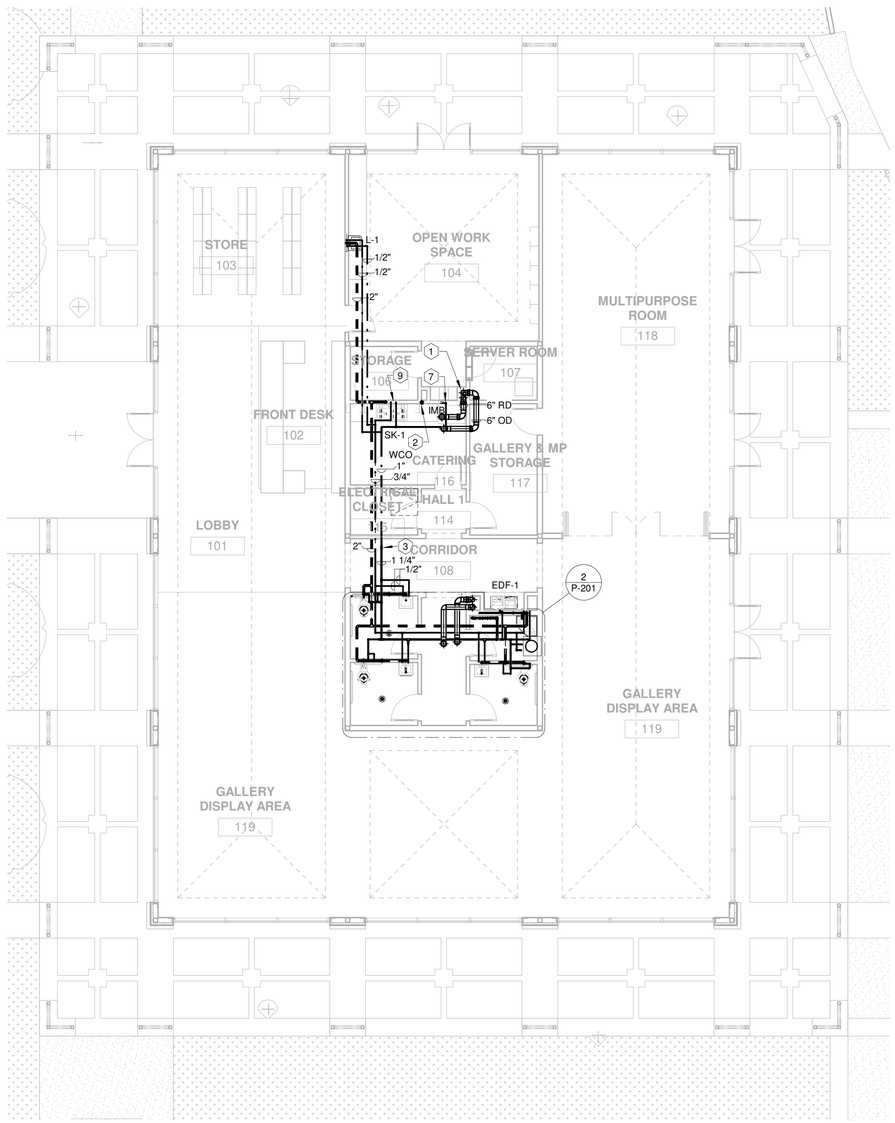

1 FLOOR PLAN - PLUMBING
1/8" = 1'-0"

KEYED # NOTES:

1. T6" RD / OD STORM PIPES DOWN IN CHASE TO BELOW THE FLOOR.
2. 3" WASTE DOWN FROM WALL CLEANOUT.
3. 1 1/4" COLD WATER UP TO ROOF HYDRANT.
4. 2" COLD WATER UP FROM BELOW. BRANCH OFF WITH A WATTS SERIES 007 BACKFLOW PREVENTER AND BYPASS VALVE.
5. ELECTRIC WATER HEATER SHALL BE MOUNTED ON A WALL SUPPORTED SHELF, LOCATED ABOVE MOP SINK APPROX. 7'-0" A.F.F.
6. PROVIDE WATER HAMMER ARRESTOR ON COLD AND HOT WATER PIPING EQUAL TO WATTS SERIES 15, PDI STANDARD "A".
7. 1/2" COLD WATER PIPE DOWN IN THE WALL TO THE REFRIGERATOR ICE MAKER VALVE BOX INSTALLED 24" A.F.F.
8. 1/2" TYPE 'K' COPPER TUBING CAST IN THE FLOOR SLAB AND CONNECTED TO FLOOR DRAIN.
9. 1/2" COLD AND HOT WATER PIPE DOWN IN THE WALL TO PLUMBING FIXTURE.
10. 1" COLD WATER PIPE DOWN IN THE WALL TO PLUMBING FIXTURE.

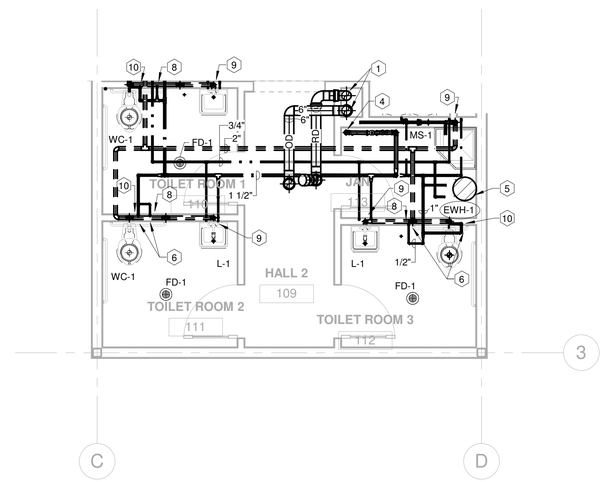

2 ENLARGED FLOOR PLAN - PLUMBING
1/4" = 1'-0"

0' 2' 4' 8' 16' 32'
SCALE: 1/8" = 1' - 0"

ProjectVerde
ENGINEERING
TX Registration No. F-19841
723 S. Flores,
San Antonio, Texas 78204

#	DESCRIPTION	DATE
	ISSUE/REVISIONS	

FLOOR PLAN - PLUMBING

WORLD HERITAGE CENTER
SAN ANTONIO, TEXAS

DUNAWAY
118 Broadway, Suite 201, San Antonio, Texas 78205
(TX REG. F-1114)

muñoz
723 S. Flores • San Antonio, Texas 78204
210.349.1163 • www.munoz-co.com

NOT FOR CONSTRUCTION
INTERIM REVIEW ONLY
DOCUMENT INCOMPLETE
NOT INTENDED FOR PERMITTING, BIDDING, OR CONSTRUCTION
JAMES M. DREWRY
TEXAS LIC. NO. 63514
November 23, 2021

JOB NO.	A19021.00
DESIGNED BY:	RLM
DRAWN BY:	RLM
CHECKED BY:	JMD
DATE:	12/1/2021
SHEET:	P-201

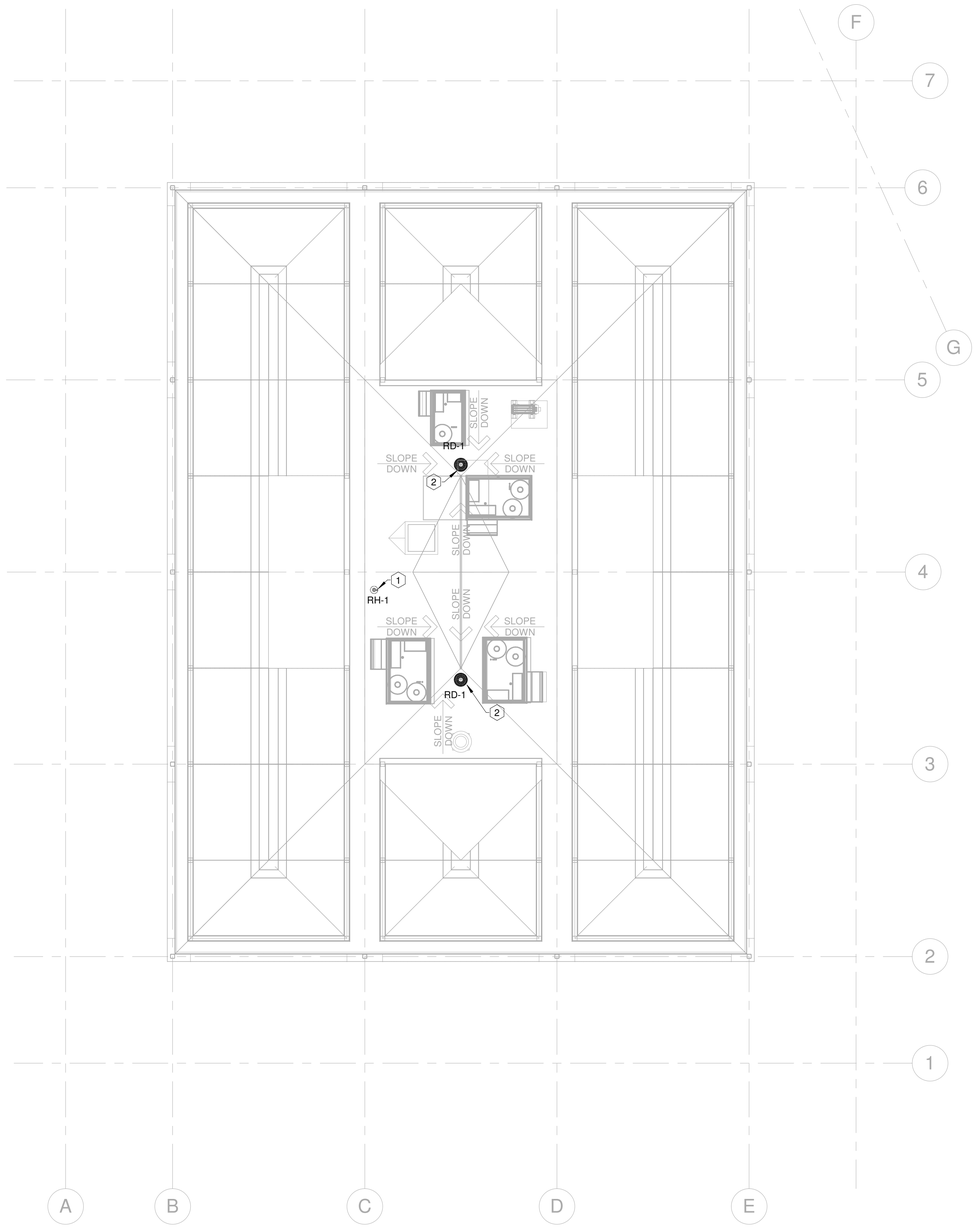

1 ROOF PLAN - PLUMBING
1/8" = 1'-0"

KEYED # NOTES:

1. 1 1/4" COLD WATER FROM BELOW.
2. 6" DUAL OUTLET ROOF DRAIN UP FROM BELOW.

0' 2' 4' 8' 16' 32'
SCALE: 1/8" = 1' - 0"

ProjectVerde
ENGINEERING
TX Registration No. F-19841
723 S. Flores,
San Antonio, Texas 78204

ISSUE/REVISIONS

#	DESCRIPTION	DATE

DUNAWAY
118 Broadway, Suite 201, San Antonio, Texas 78205
210.227.2000
(TX REG. F-1114)

muñoz
723 S. Flores • San Antonio, Texas 78204
210.349.1163 • www.munoz-co.com

ROOF PLAN - PLUMBING

WORLD HERITAGE CENTER
SAN ANTONIO, TEXAS

NOT FOR CONSTRUCTION
INTERIM REVIEW ONLY
DOCUMENT INCOMPLETE
NOT INTENDED FOR PERMITTING, BIDDING, OR CONSTRUCTION
JAMES M. DREWRY
TEXAS LIC. NO. 63519
November 23, 2021

JOB NO.	A19021.00
DESIGNED BY:	RLM
DRAWN BY:	RLM
CHECKED BY:	JMD
DATE:	12/1/2021
SHEET:	P-202

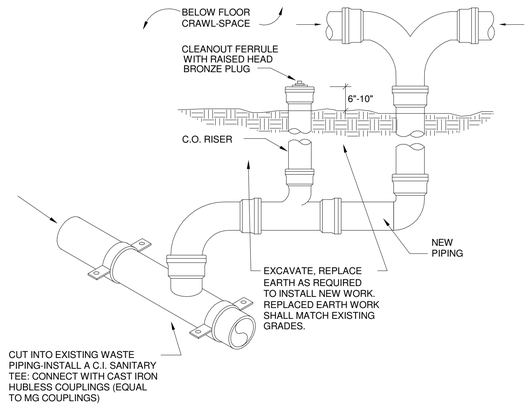

1 PIPING CONNECTION DETAIL
12" = 1'-0"

WATER HEATER SCHEDULE

MARK	SERVICE	TYPE	RECOVERY: GPH	RECOVERY: RISE (DEG.F)	STORAGE CAP. (GALLONS)	LINING	WATER TEMP. (DEG.F)	ENERGY SOURCE	MIN. THERMAL EFF. (%)	INPUT: KW	INPUT: VOLT/ PH/ HZ	CONTROL POWER: VOLT/ PH/ HZ	CONTROL POWER: AMPS	MODEL	NOTES
EWH-1	JANITOR ROOM	ELECTRIC, STORAGE	12.5	60	20	ENAMEL	110	ELEC.	95	1.5	208/ 1/ 60	N / A	N / A	RHEEM EGSP20	2,3

NOTES:
1. ACCEPTABLE MANUFACTURERS - A.O. SMITH, RHEEM, RUDD, GREEN CHOICE.
2. ASHRAE/IES 90.1, T&P VALVE.
3. PROVIDE EXPANSION TANK EQUAL TO WATTS MODEL DETA-5.
4. PROVIDE LOW Nox EMISSIONS.
5. PROVIDE 5 YEAR LIMITED WARRANTY.
6. INSTALL POLYPROPYLENE DIRECT VENT PIPING IN ACCORDANCE WITH MANUFACTURERS RECOMMENDATIONS.
7. PROVIDE AND INSTALL CONDENSATE NEUTRALIZER KIT FOR CONDENSING FLUE GASES ROUTED TO FLOOR DRAIN.

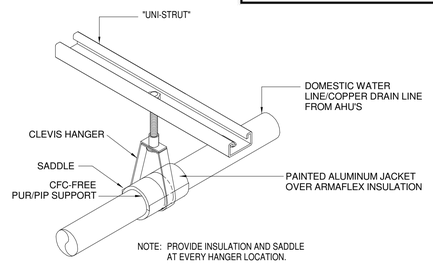

3 DOMESTIC WATER PIPING SUPPORT DETAIL
12" = 1'-0"

PLUMBING FIXTURE SCHEDULE

PLAN MARK	MINIMUM ROUGH-IN SIZES: WST&VENT	DRAIN	CW	HW	DESCRIPTION
WATER CLOSET WC-1	4"	2"	4"	1"	----	AMERICAN STANDARD No.3641.001 FLOOR MOUNT WHITE V.C. ELONGATED SIPHON JET (1.28 GPF) BOWL WITH TOP SPUD, WHITE OPEN FRONT SEAT LESS COVER AND ZURN No.SLOAN REGAL No.111 FLUSH VALVE AND FLUIDMASTER RUBBER TOILET SEAL FLOOR MOUNTED.
LAVATORY L-1	2"	1-1/2"	1-1/4"	1/2"	----	AMERICAN STANDARD DECLYN No.0321.026 WHITE V. C. 18-1/2 x 17" WALL- HUNG LAVATORY WITH TWO HOLES 4" CENTERS REAR OVERFLOW. PROVIDE DELTA FAUCET No.87T105 WITH BASE PLATE No.87T151 METERED FAUCET,0.25 GPM METERING CYCLE & FIXED GRID DRAIN, CHROME PLATED BRASS P-TRAP, STOPS AND SUPPLIES AND CARRIER.
SINK SK-1 DOUBLE COMPARTMENT	2"	1-1/2"	1-1/2"	1/2"	1/2"	ELKAY No. LRAD-2219 "LUSTERTONE" 4-1/2" DEEP BOWL 2 HOLES PUNCH STAINLESS STEEL SINK. PROVIDE DELTA FAUCET No.26C3942-7R GOOSENECK FAUCET (2.2 GPM) WITH WRIST BLADE HANDLES, ELKAY No. LK-18 GRID DRAIN STRAINERS, TAILPIECE, CAST BRASS P-TRAP WITH CO., STOPS AND SUPPLIES.
ELECTRIC DRINKING FOUNTAIN EDF-1	1-1/2"	1-1/2"	1-1/2"	1/2"	----	ELKAY No. EZSTL8C, BI-LEVEL ELECTRIC DRINKING FOUNTAIN, LEAD FREE, WALL MOUNTED, WITH CHILLER 4.0 GPH OF 50DEG. F WITH 80DEG. F AMBIENT TEMP, 1/5 HP, 4.8 FL. AMPS. PROVIDE P-TRAP AND AND SUPPLY AND CARRIER.
THERMOSTATIC MIXING VALVE TMV-1	----	----	----	1/2"	1/2"	POWERS No.MM431, MIXING VALVE, MINIMUM FLOW 2 GPM, OULET TEMPERATURE FROM 90 TO 110 DEG. WITH LOCKABLE TEMPERATURE SETTING, CHECK STOPS.
ICE MAKER WATER CONNECTION BOX IMB	----	----	----	----	----	GUY GRAY # IMOB WITH 36" 1/4" BRAIDED PE PIPING, BUSHING SET. CONNECT TO REFRIGERATOR ICE MAKER CONNECTION.
FLOOR DRAIN FD-1	3"	2"	3"		1/2"	J.R. SMITH # 2005Y-A-CD ROUND FLOOR DRAIN WITH NO HUB NICKEL BRONZE HEEL PROOF STRAINER AND 1/2" IPS TRAP PRIMER CONN.
MOP SINK MS-1	3"	2"	3"	3/4"	3/4"	FIAT MODEL TSB-700 24" x 36" PRECAST TERRAZZO, 12" HIGH WITH 2" WIDE PLAIN SHOULDERS, STAINLESS STEEL INTEGRAL STOPS, ADJUSTABLE WALL BRACE, PAIL HOOK AND 3/4" HOSE THREAD ON SPOUT, #832-AA HOSE AND HOSE BRACKET AND 3 EACH # 889-CC MOP HANGERS.
ROOF DRAIN / OVERFLOW DRAIN RD-1	----		6"	----	----	ZURN 100C FROET DRAIN BI-FUNCTIONAL ROOF DRAIN WITH 45 DEGREE PRIMARY OUTLET CONNECTION. POWDER COATED COMBINATION MEMBRANE FLASHING CLAMP/GRAVEL GUARD, OVERFLOW PIPE 6" WITH STANDARD 5-1/4" HIGH CAST IRON DOME AND 6-1/4" HIGH CAST IRON OVERFLOW.
ROOF HYDRANT RH-1	----	----	----	3/4"	----	WOODFORD No.SRH-MS FREEZELSS SANITARY ROOF HYDRANT

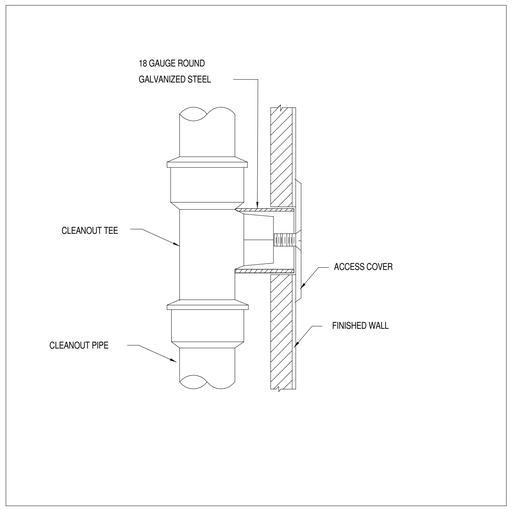

2 WALL CLEANOUT PLBG. DETAIL
12" = 1'-0"

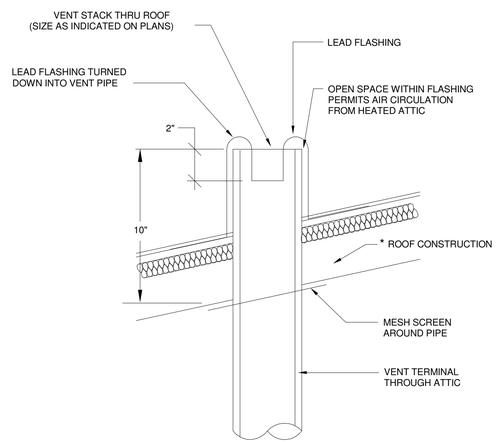

4 VENT THRU ROOP DETAIL
12" = 1'-0"

ProjectVerde
ENGINEERING
TX Registration No. F-19841
723 S. Flores,
San Antonio, Texas 78204

#	DESCRIPTION	DATE

ISSUE/REVISIONS

PLUMBING SCHEDULES & DETAILS

WORLD HERITAGE CENTER
SAN ANTONIO, TEXAS

DUNAWAY
118 Broadway, Suite 201, San Antonio, Texas 78205
210.225.1784
(TX REG. F-1114)

muñoz
723 S. Flores • San Antonio, Texas 78204
210.349.1163 • www.munoz-co.com

NOT FOR CONSTRUCTION
INTERIM REVIEW ONLY
DOCUMENT INCOMPLETE
NOT INTENDED FOR PERMITTING, BIDDING, OR CONSTRUCTION
JAMES M. DREWRY
TEXAS LIC. NO. 63517
November 23, 2021

JOB NO.	A19021.00
DESIGNED BY:	RLM
DRAWN BY:	RLM
CHECKED BY:	JMD
DATE:	12/1/2021
SHEET:	P-401

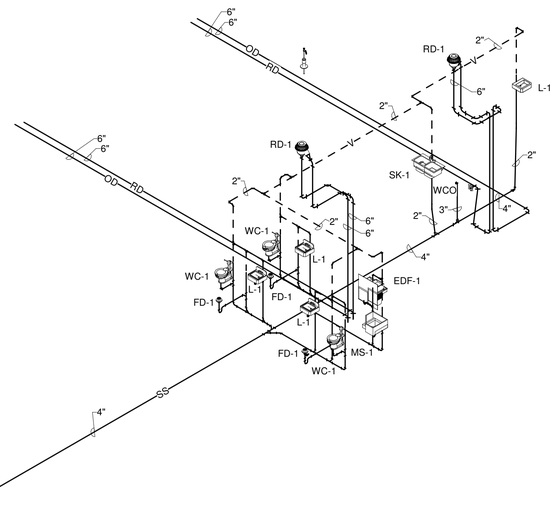

1 WASTE AND VENT RISER DIAGRAM

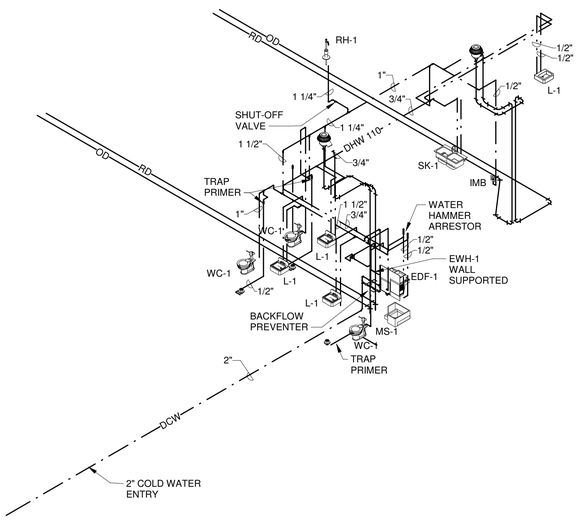

2 WATER RISER DIAGRAM

ISSUE/REVISIONS

#	DESCRIPTION	DATE

PLUMBING RISER DIAGRAMS

WORLD HERITAGE CENTER
SAN ANTONIO, TEXAS

DUNAWAY
118 Broadway, Suite 201 San Antonio, Texas 78205
210.227.2000
(TX REG. F-1114)

muñoz
723 S. Flores • San Antonio, Texas 78204
210.349.1163 • www.munoz-co.com

NOT FOR CONSTRUCTION
INTERIM REVIEW ONLY
DOCUMENT INCOMPLETE
NOT INTENDED FOR PERMITTING, BIDDING, OR CONSTRUCTION
JAMES M. DREWRY
TEXAS LIC. NO. 63519
November 23, 2021

JOB NO.	A19021.00
DESIGNED BY:	RLM
DRAWN BY:	RLM
CHECKED BY:	JMD
DATE:	12/1/2021
SHEET:	P-501

ProjectVerde
ENGINEERING
TX Registration No. F-19841
723 S. Flores,
San Antonio, Texas 78204

NORTH

GRAPHIC SCALE

0 100 200

1 inch = 100'

REVISIONS

NO.	DATE	DESCRIPTION

SITE ORIENTATION PLAN

WORLD HERITAGE CENTER
SAN ANTONIO, TEXAS

DUNAWAY
118 Broadway • Suite 201A • San Antonio, Texas 78205
Tel: 210.267.5246
TX REG. F-11148

muñoz
723 S. Flores • San Antonio, Texas 78204
210.349.1163 • www.munoz-co.com

PRELIMINARY
FOR REVIEW ONLY
These documents are for Design Review and not intended for Construction, Bidding or Permit Purposes. They were prepared by, or under the supervision of:
Bryan Kye Mask
L.A.# 2369

JOB NO.	5675.001
DESIGNED BY:	TLL
DRAWN BY:	DAM
CHECKED BY:	BKM
DATE:	12/01/2021
SHEET:	L0.00

FILE PATH: G:\Production\4000\5000\5675\001\PLA\Drawings\95% CD\Plot Sheets\Production\4000\5000\5675\001\PLA\Drawings\95% CD\Plot Sheets\5675.L001-Site Orientation

FILENAME: 5675.L001-Site Orientation.dwg
PLOTTED BY: Damaris Reynoso
PLOTTED ON: Thursday, November 02, 2021
PLOTTED AT: 1:31:03 PM
PLOTTED WITH: DWG To PDF.pc3

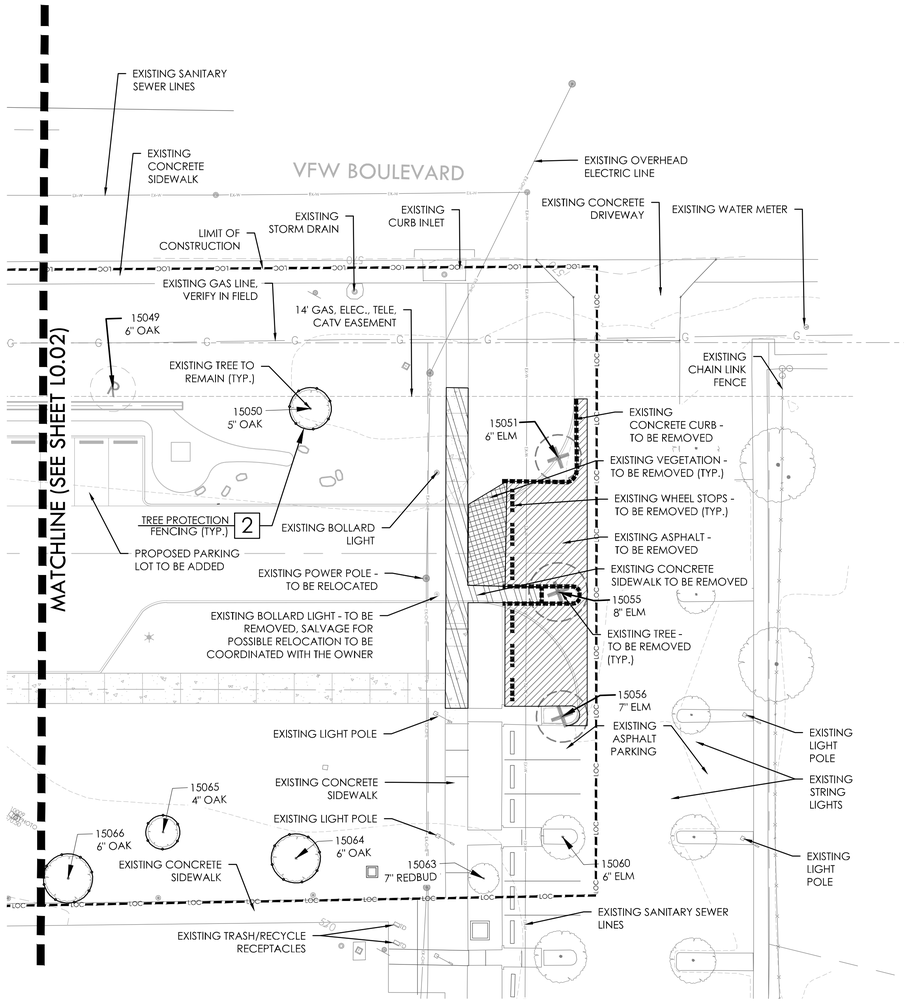

LEGEND

PROPERTY LINE

LIMIT OF CONSTRUCTION

FENCE LINE

OVERHEAD ELECTRIC

EXISTING CONCRETE CURB TO BE REMOVED

AREA TO BE CLEARED OF VEGETATION NECESSARY TO FACILITATE CONSTRUCTION

AREA OF ASPHALT TO BE REMOVED

AREA OF SIDEWALK TO BE REMOVED

AREA OF CONCRETE DRAIN TO BE REMOVED

TRUNK PROTECTION FENCING

TREE PROTECTION FENCING

EXISTING TREE TO REMAIN

EXISTING TREE TO BE REMOVED

EXISTING TREE TO BE RELOCATED

DEMOLITION KEY			
KEY	DESCRIPTION	DETAIL NO:	DETAIL SHEET:
1	TRUNK PROTECTION FENCING	A	L0.06
2	TREE PROTECTION FENCING	B	L0.06

NORTH

GRAPHIC SCALE

0 20 40

1 inch = 20'

REVISIONS

NO.	DATE	DESCRIPTION

DEMOLITION AND TREE PRESERVATION PLAN

WORLD HERITAGE CENTER
SAN ANTONIO, TEXAS

DUNAWAY
1118 Broadway • Suite 201 • San Antonio, Texas 78205
Tel: 210.267.0246
TBPELS F-11148

muñoz
723 S. Flores • San Antonio, Texas 78204
210.349.1163 • www.munoz-co.com

PRELIMINARY
FOR REVIEW ONLY
These documents are for Design Review and not intended for Construction, Bidding or Permit Purposes. They were prepared by, or under the supervision of:
Bryan Kye Mask
L.A.# 2369

JOB NO.	5675.001
DESIGNED BY:	TLL
DRAWN BY:	DAM
CHECKED BY:	BKM
DATE:	12/01/2021
SHEET:	L0.01

FULL PATH: G:\Production\4000\05600\56275001\PLAN\Drawings\95% CD\Plot Sheets\C-\Products\4000\05600\56275001\PLAN\Drawings\95% CD\Plot Sheets\5675.001-Ex Conditions Plan

FILENAME: 5675.001-Ex Conditions Plan-dwg
PLOTTED BY: Damaris Martinez
PLOTTED ON: Thursday, December 02, 2021
PLOTTED AT: 1:52:38 PM
PLOTTED WITH: DWG TO PDF.pc3

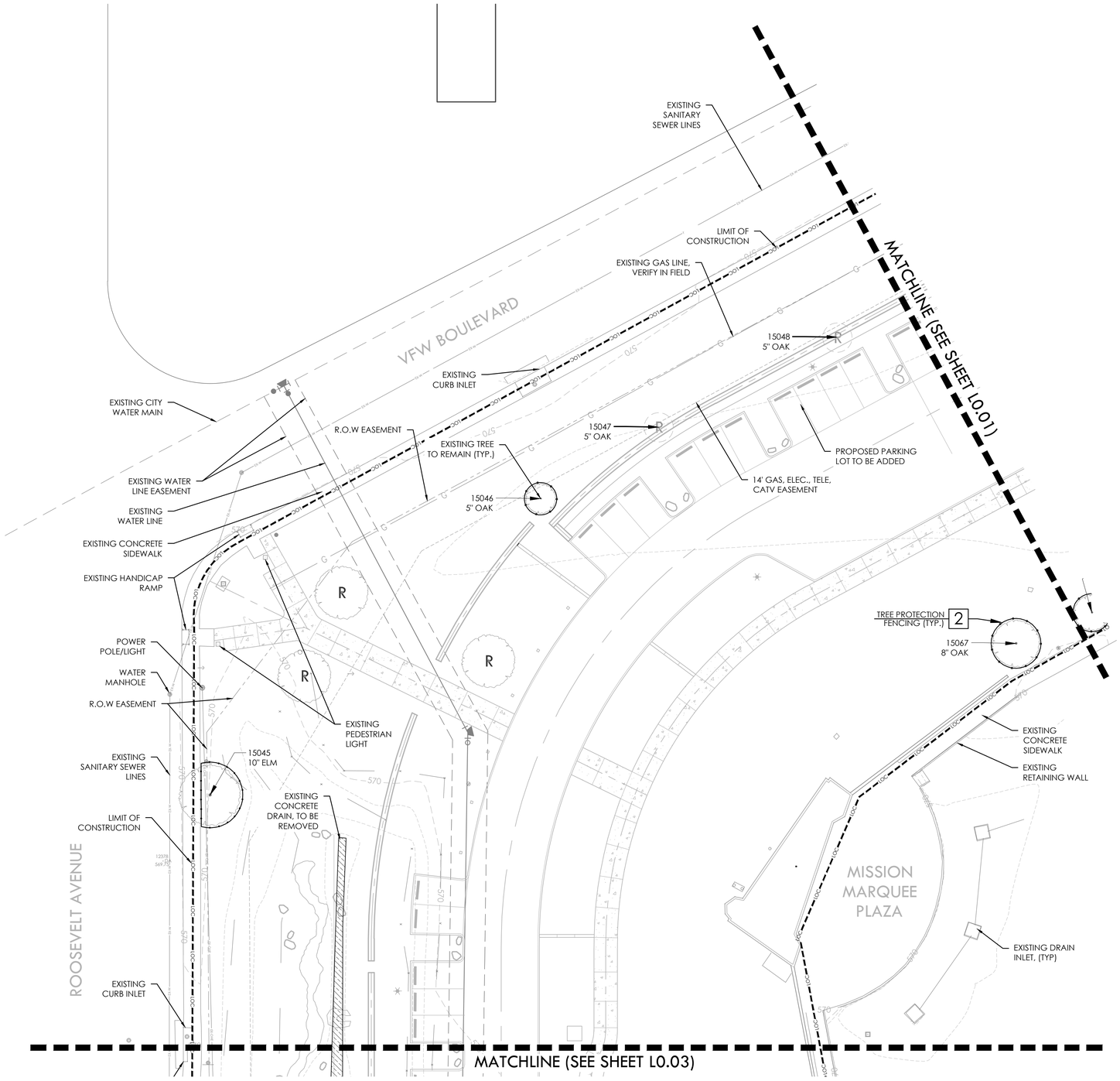

LEGEND

- PROPERTY LINE
- LIMIT OF CONSTRUCTION
- FENCE LINE
- OVERHEAD ELECTRIC
- EXISTING CONCRETE CURB TO BE REMOVED
- AREA TO BE CLEARED OF VEGETATION NECESSARY TO FACILITATE CONSTRUCTION
- AREA OF ASPHALT TO BE REMOVED
- AREA OF SIDEWALK TO BE REMOVED
- AREA OF CONCRETE DRAIN TO BE REMOVED
- TRUNK PROTECTION FENCING
- TREE PROTECTION FENCING
- EXISTING TREE TO REMAIN
- EXISTING TREE TO BE REMOVED
- EXISTING TREE TO BE RELOCATED

DEMOLITION KEY			
KEY	DESCRIPTION	DETAIL NO:	DETAIL SHEET:
1	TRUNK PROTECTION FENCING	A	L0.06
2	TREE PROTECTION FENCING	B	L0.06

NORTH

GRAPHIC SCALE
0 20 40
1 inch = 20'

REVISIONS

NO.	DATE	DESCRIPTION

DEMOLITION AND TREE PRESERVATION PLAN

WORLD HERITAGE CENTER
SAN ANTONIO, TEXAS

DUNAWAY
1118 Broadway • Suite 201 • San Antonio, Texas 78205
Tel: 210.267.0246
TBPELS F-11148

muñoz
723 S. Flores • San Antonio, Texas 78204
210.349.1163 • www.munoz-co.com

PRELIMINARY
FOR REVIEW ONLY
These documents are for Design Review and not intended for Construction, Bidding or Permit Purposes. They were prepared by, or under the supervision of:
Bryan Kye Mask
L.A.# 2369

JOB NO.	5675.001
DESIGNED BY:	TLL
DRAWN BY:	DAM
CHECKED BY:	BKM
DATE:	12/01/2021
SHEET:	L0.02

FULL PATH: G:\Production\4000\05600\56675\001\PA\Drawings\95%_CD\Plot Sheets\G:\Production\4000\05600\56675\001\PA\Drawings\95%_CD\Plot Sheets\5675.001-Ex Conditions Plan

FILENAME: 5675.001-Ex Conditions Plan.dwg
PLOTTED BY: Damaris Martinez
PLOTTED ON: Thursday, December 02, 2021
PLOTTED AT: 1:35:58 PM
PLOTTED WITH: DWG TO PDF.pc3

MATCHLINE (SEE SHEET L0.02)

EXISTING CURB INLET
EXISTING CONCRETE SIDEWALK
EXISTING SANITARY SEWER LINES
EXISTING OVERHEAD ELECTRIC LINES
LIMIT OF CONSTRUCTION
R.O.W EASEMENT
EXISTING BUS STOP
EXISTING RETAINING WALL
EXISTING SANITARY SEWER MANHOLE
POWER POLE
EXISTING CONCRETE DRIVEWAY
MISSION LIBRARY SIGN
EXISTING HANDICAP RAMP
EXISTING CURB INLET
14' GAS, ELEC., TELE, CATV EASEMENT
ROOSEVELT AVENUE
EXISTING CONCRETE DRAIN, TO BE REMOVED
EXISTING HEADWALL/GUARDRAIL
EXISTING CONCRETE DRAIN
EXISTING WATER LINE EASEMENT
EXISTING WATER LINE
PROPOSED PARKING LOT TO BE ADDED
EXISTING WATER LINE EASEMENT
EXISTING WATER LINE
EXISTING VEGETATION - TO BE REMOVED (TYP.)
EXISTING CONCRETE DRAIN
15044 9" OAK
15043 9" OAK
15068 5" OAK
EXISTING BOLLARD LIGHT - TO BE REMOVED, SALVAGE FOR POSSIBLE RELOCATION TO BE COORDINATED WITH THE OWNER. (TYP.)
WORLD HERITAGE CENTER
15078 4" ELM
EXISTING ASPHALT - TO BE REMOVED
EXISTING SIDEWALK, TO BE REMOVED
EXISTING FIRE HYDRANT, TO BE RELOCATED. REF: CIVIL PLANS
EXISTING CURB INLET
EXISTING CONCRETE DRIVEWAY
EXISTING LIGHT, (TYP.)
EXISTING FIRE HYDRANT
EXISTING HANDICAP RAMP
EXISTING CONCRETE DRAIN
EXISTING TREE - TO BE REMOVED (TYP.)
EXISTING CONCRETE SIDEWALK
EXISTING CULVERT, TO BE REMOVED
15069 6" OAK
EXISTING TREE TO REMAIN (TYP.)
2 TREE PROTECTION FENCING (TYP.)
1 TRUNK PROTECTION FENCING (TYP.)
15070 6" OAK
15071 9" OAK
EXISTING LIGHT POLE
EXISTING TRASH RECEPTACLE TO REMAIN (TYP.)
EXISTING PET WASTE STATION
EXISTING BIKE RACK
EXISTING ASPHALT PARKING
15075 4" ELM
EXISTING WHEEL STOPS - TO BE REMOVED (TYP.)
EXISTING SIDEWALK, TO BE REMOVED
LIMIT OF CONSTRUCTION
6 4" MOUNTAIN LAUREL
5 4" MOUNTAIN LAUREL
EXISTING VEGETATION - TO BE REMOVED (TYP.)
EXISTING SIDEWALK
EXISTING WATER LINE
EXISTING SANITARY SEWER LINE
MISSION LIBRARY

MATCHLINE (SEE SHEET L0.04)

LEGEND

PROPERTY LINE
LIMIT OF CONSTRUCTION
FENCE LINE
OVERHEAD ELECTRIC
EXISTING CONCRETE CURB TO BE REMOVED
AREA TO BE CLEARED OF VEGETATION NECESSARY TO FACILITATE CONSTRUCTION
AREA OF ASPHALT TO BE REMOVED
AREA OF SIDEWALK TO BE REMOVED
AREA OF CONCRETE DRAIN TO BE REMOVED
TRUNK PROTECTION FENCING
TREE PROTECTION FENCING
EXISTING TREE TO REMAIN
EXISTING TREE TO BE REMOVED
EXISTING TREE TO BE RELOCATED

DEMOLITION KEY

KEY	DESCRIPTION	DETAIL NO:	DETAIL SHEET:
1	TRUNK PROTECTION FENCING	A	L0.06
2	TREE PROTECTION FENCING	B	L0.06

NORTH

GRAPHIC SCALE
0 20 40
1 inch = 20'

REVISIONS

NO.	DATE	DESCRIPTION

DUNAWAY
1118 Broadway • Suite 201 • San Antonio, Texas 78205
Tel: 210.267.0246
TBPELS F-11148

muñoz
723 S. Flores • San Antonio, Texas 78204
210.349.1163 • www.munoz-co.com

DEMOLITION AND TREE PRESERVATION PLAN

WORLD HERITAGE CENTER
SAN ANTONIO, TEXAS

PRELIMINARY
FOR REVIEW ONLY
These documents are for Design Review and not intended for Construction, Bidding or Permit Purposes. They were prepared by, or under the supervision of:
Bryan Kye Mask
L.A.# 2369

JOB NO.	5675.001
DESIGNED BY:	TLL
DRAWN BY:	DAM
CHECKED BY:	BKM
DATE:	12/01/2021
SHEET:	L0.03

FILE PATH: G:\Projects\4000\05600\5675\001\PLAN\Drawings\95% CD\Plot Sheets\G\Production\4000\05600\5675\001\PLAN\Drawings\95% CD\Plot Sheets\5675.001 Ex Conditions Plan

FILENAME: 5675.001 Ex Conditions Plan.dwg
PLOTTED BY: Damaris Martinez
PLOTTED ON: Thursday, December 02, 2021
PLOTTED AT: 1:55:31 PM
PLOTTED WITH: DWG To PDF.pc3

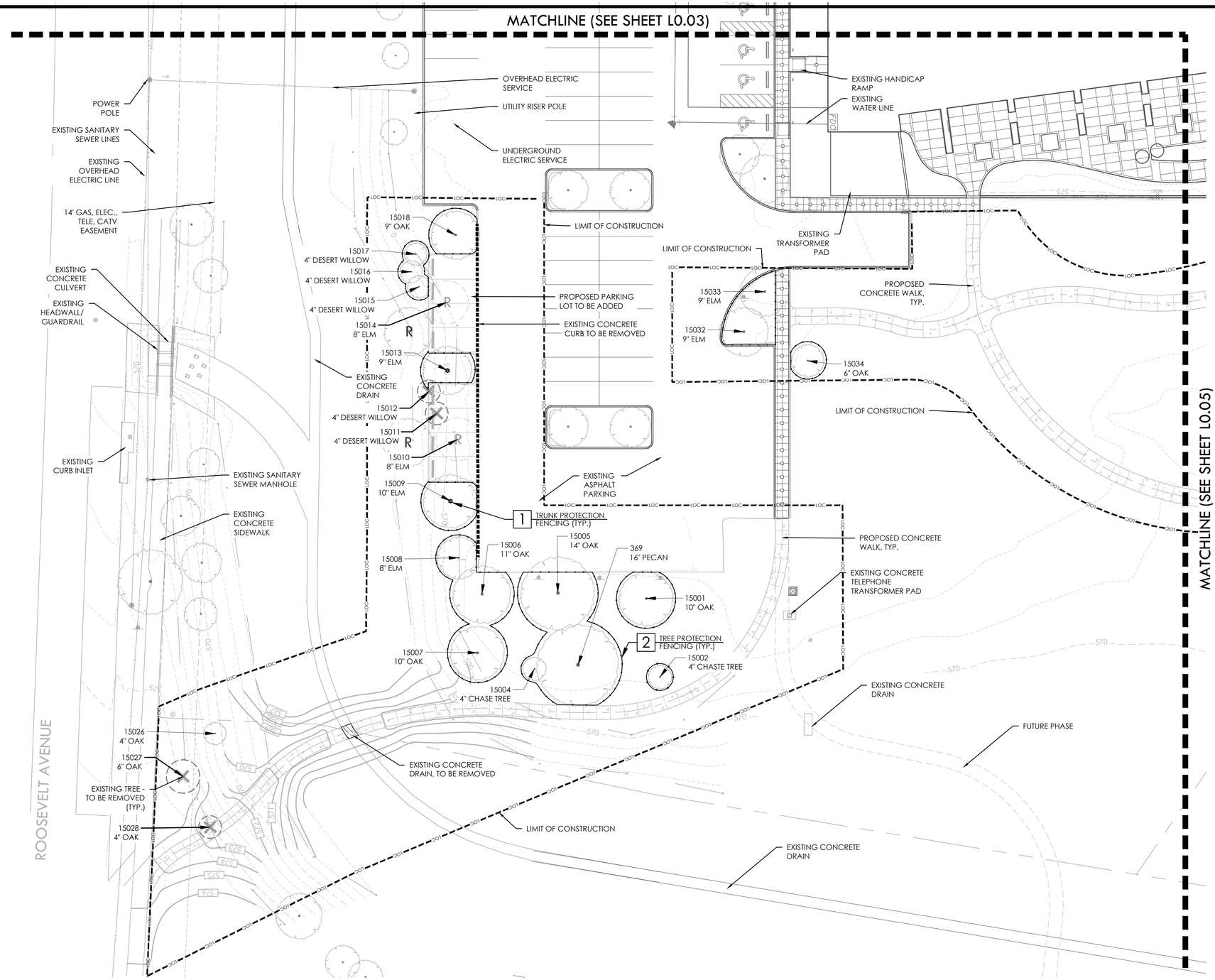

LEGEND

- PROPERTY LINE
- LIMIT OF CONSTRUCTION
- FENCE LINE
- OVERHEAD ELECTRIC
- EXISTING CONCRETE CURB TO BE REMOVED
- AREA TO BE CLEARED OF VEGETATION NECESSARY TO FACILITATE CONSTRUCTION
- AREA OF ASPHALT TO BE REMOVED
- AREA OF SIDEWALK TO BE REMOVED
- AREA OF CONCRETE DRAIN TO BE REMOVED
- TRUNK PROTECTION FENCING
- TREE PROTECTION FENCING
- EXISTING TREE TO REMAIN
- EXISTING TREE TO BE REMOVED
- EXISTING TREE TO BE RELOCATED

DEMOLITION KEY

KEY	DESCRIPTION	DETAIL NO:	DETAIL SHEET:
1	TRUNK PROTECTION FENCING	A	L0.06
2	TREE PROTECTION FENCING	B	L0.06

NORTH

GRAPHIC SCALE
0 20 40
1 inch = 20'

REVISIONS

NO.	DATE	DESCRIPTION

DUNAWAY
1118 Broadway • Suite 201 • San Antonio, Texas 78205
Tel: 210.267.0246
TBPELS F-11148

muñoz
723 S. Flores • San Antonio, Texas 78204
210.349.1163 • www.munoz-co.com

DEMOLITION AND TREE PRESERVATION PLAN

WORLD HERITAGE CENTER
SAN ANTONIO, TEXAS

PRELIMINARY
FOR REVIEW ONLY
These documents are for Design Review and not intended for Construction, Bidding or Permit Purposes. They were prepared by, or under the supervision of:
Bryan Kye Mask
L.A.# 2369

JOB NO.	5675.001
DESIGNED BY:	TLL
DRAWN BY:	DAM
CHECKED BY:	BKM
DATE:	12/01/2021
SHEET:	L0.04

FILE PATH: G:\Production\4000\005\005\5675\001\P.AD\Drawings\95% CD\Plot Sheets\5675.001-Ex Conditions Plan

FILENAME: 5675.001-Ex Conditions Plan.dwg
PLOTTED BY: Damian Martinez
PLOTTED ON: Thursday, December 02, 2021
PLOTTED AT: 1:58:20 PM
PLOTTED WITH: TBPWC 19 PDF.pc3

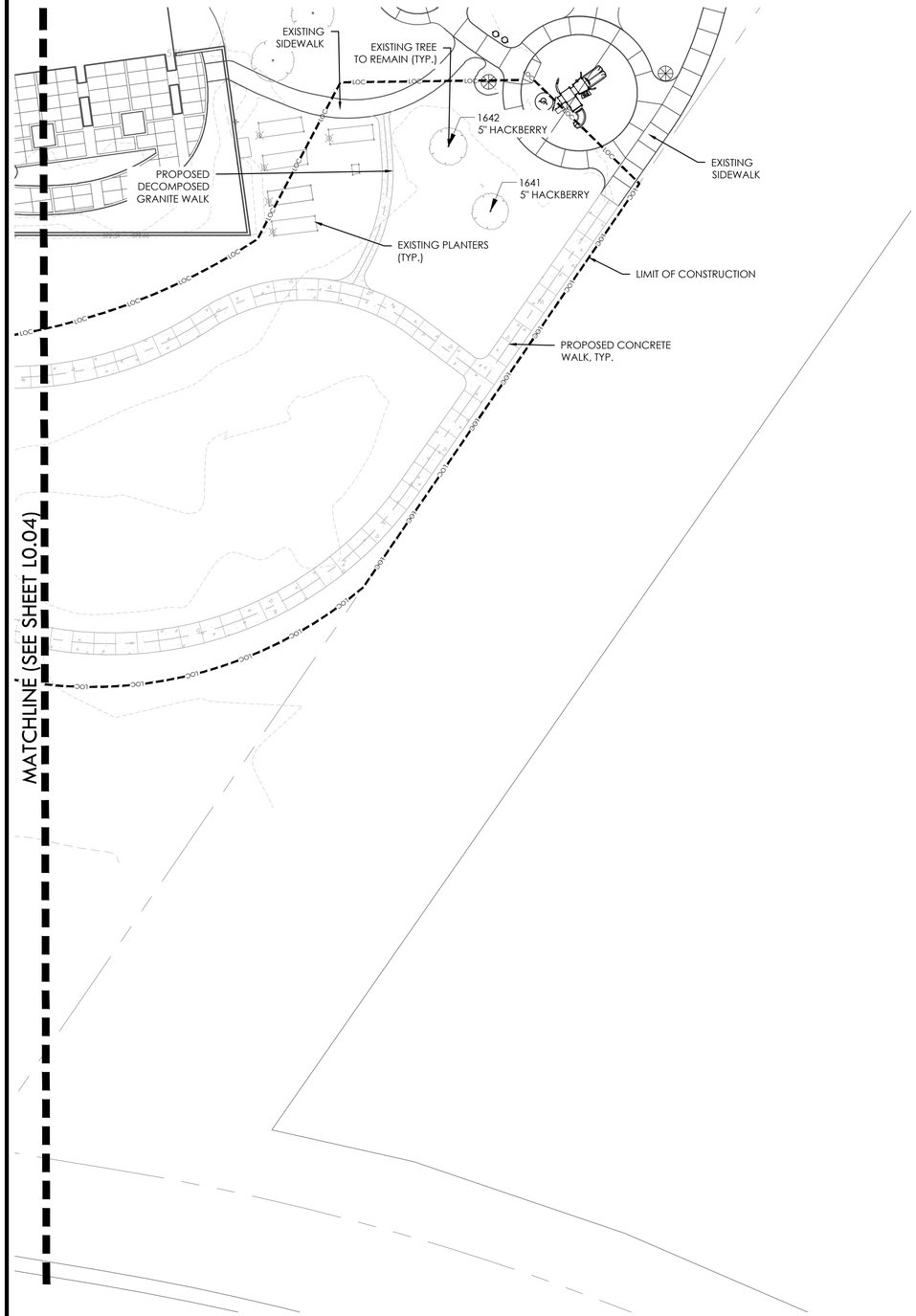

LEGEND

- PROPERTY LINE
- LIMIT OF CONSTRUCTION
- FENCE LINE
- OVERHEAD ELECTRIC
- EXISTING CONCRETE CURB TO BE REMOVED
- AREA TO BE CLEARED OF VEGETATION NECESSARY TO FACILITATE CONSTRUCTION
- AREA OF ASPHALT TO BE REMOVED
- AREA OF SIDEWALK TO BE REMOVED
- AREA OF CONCRETE DRAIN TO BE REMOVED
- TRUNK PROTECTION FENCING
- TREE PROTECTION FENCING
- EXISTING TREE TO REMAIN
- EXISTING TREE TO BE REMOVED
- EXISTING TREE TO BE RELOCATED (R)

DEMOLITION KEY			
KEY	DESCRIPTION	DETAIL NO:	DETAIL SHEET:
1	TRUNK PROTECTION FENCING	A	L0.06
2	TREE PROTECTION FENCING	B	L0.06

NORTH

GRAPHIC SCALE
0 20 40
1 inch = 20'

REVISIONS

NO.	DATE	DESCRIPTION

DUNAWAY
1118 Broadway • Suite 201 • San Antonio, Texas 78205
Tel: 210.267.0246
TBPELS F-11148

muñoz
723 S. Flores • San Antonio, Texas 78204
210.349.1163 • www.munoz-co.com

DEMOLITION AND TREE PRESERVATION PLAN

WORLD HERITAGE CENTER
SAN ANTONIO, TEXAS

PRELIMINARY
FOR REVIEW ONLY
These documents are for Design Review and not intended for Construction, Bidding or Permit Purposes. They were prepared by, or under the supervision of:
Bryan Kye Mask
L.A.# 2369

JOB NO.	5675.001
DESIGNED BY:	TLL
DRAWN BY:	DAM
CHECKED BY:	BKM
DATE:	12/01/2021
SHEET:	L0.05

FULL PATH: G:\Production\0000\0050\5675\001\PLAT\Drawings\95% CD\Plot Sheets\5675.001 Ex Conditions Plan

FILENAME: 5675.001 Ex Conditions Plan.dwg
PLOTTED BY: Damaris Mackey
PLOTTED ON: Thursday, November 02, 2021
PLOTTED AT: 1:09:56 PM
PLOTTER NAME: DWG To PDF.pc3

EXISTING TREE CHART

TREE INVENTORY

PT#	Species	Understory Species* 5.0" - 11.5" Removed	Understory Species* 5.0" - 11.5" Preserved	Significant Tree 6" - 23.5" Removed	Significant Tree 6" - 23.5" Preserved	Significant Tree** 10.0" - 23.5" Removed	Significant Tree** 10.0" - 23.5" Preserved	Heritage 3:1 Removed	Heritage 3:1 Preserved	Heritage 1:1** Removed	Heritage 1:1** Preserved	Additional Inches Preserved for Mitigation *** Preserved
15060	Elm (6)				6							
15063	Redbud (7)			7								
15050	Oak (5)		5									
15049	Oak (6)				6							
15048	Oak (5)		5									
15047	Oak (5)		5									
15046	Oak (5)		5									
15064	Oak (6)				6							
15065	Oak (4)											4
15066	Oak (6)				6							
15067	Oak (8)				8							
15045	Elm (10)				10							
15069	Oak (6)				6							
15070	Oak (6)				6							
15071	Oak (9)				9							
15075	Elm (4)											4
15043	Oak (9)				9							
15044	Oak (9)				9							
15026	Oak (4)											4
15033	Elm (9)				9							
15032	Elm (9)				9							
15034	Oak (6)				6							
15018	Oak (9)				9							
15017	Desert Willow (4)											4
15016	Desert Willow (4)											4
15015	Desert Willow (4)											4
15014	Elm (8)				8							
15013	Elm (9)				9							
15010	Elm (8)				8							
15009	Elm (10)				10							
15008	Elm (8)				8							
15006	Oak (11)				11							
15005	Oak (14)				14							
15007	Oak (10)				10							
15004	Chaste tree (4)											4
15002	Chaste tree (4)											4
15001	Oak (10)				10							
6	Mountain Laurel (4)											4
369	Pecan (16)				16							
1641	Hackberry (5)											5
1642	Hackberry (5)											5
Sub. Tot. Inches		0	20	7	218	0	0	0	0	0	0	46
Total inches by category=			20		225		0		0		0	
Preservation percentage=		100%		Significant		97%		Heritage Preservation		N/A		46
Mitigation required (Commercial) =		-12		Commercial (inches)		-128						
Mitigation required (Capital Imp.) =		-15		Capital Imp. (inches)		-161.75		Heritage Mitigation (inches)			0	

No category to fall below 10% preservation;
Preserved- Tree to remain that meets root protection zone requirements described in section 35-523 of the UDC.
Mitigation 1:1 for significant trees below minimum preservation requirements; 3:1 for heritage trees below 100%
** Small species: Condalia, Redbud, Tx. Mountain Laurel, Tx. Persimmon, Hawthorn, Possumhaw - these are mitigated at 1:1 for Heritage Trees*
*** Ashe Juniper, Huisache, Mesquite, Arizona Ash, Hackberry protected at 10" dbh and mitigated at 1:1 for heritage trees*
**** Mitigation Trees: Unprotected-sized trees to be used for mitigation calculations; subtract inches from mitigation owed*

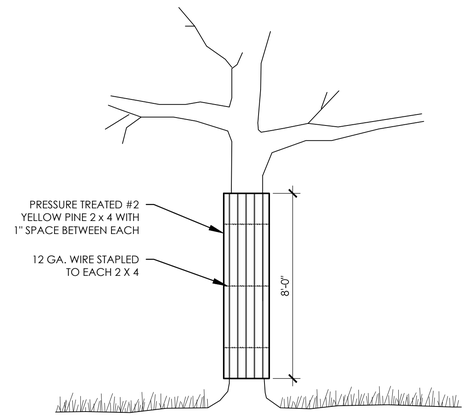

A **EXISTING TREE TRUNK PROTECTION** SCALE: 1"=1'-0"

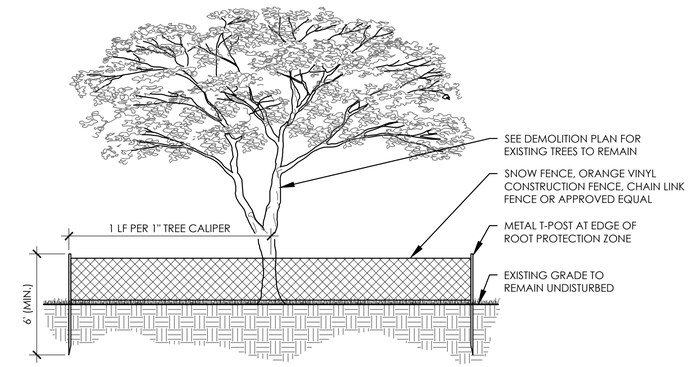

B **TREE PROTECTION FENCING** SCALE: N.T.S.

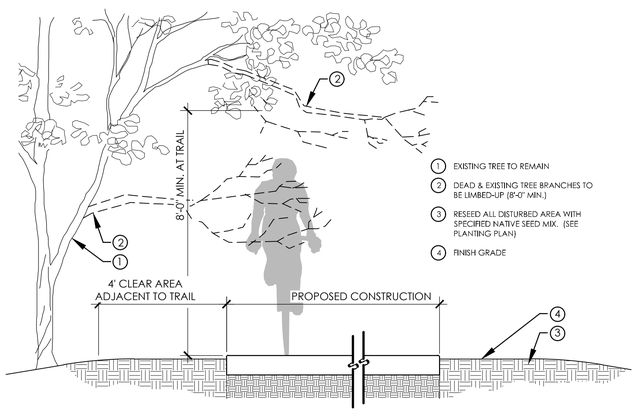

C **TREE PRUNING AT NEW CONSTRUCTION** SCALE: NTS

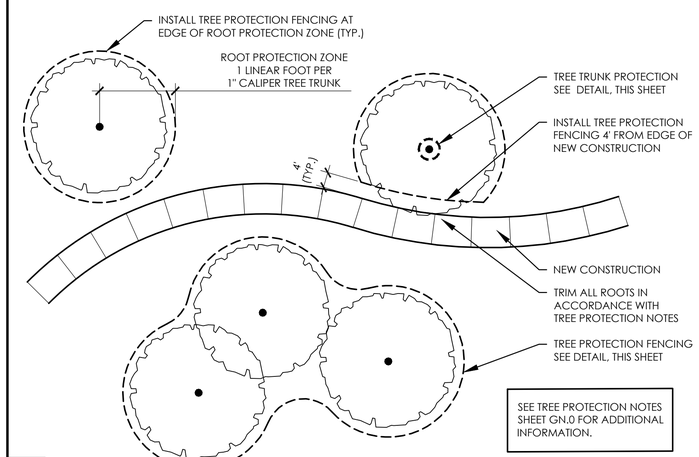

D **TREE PROTECTION** - CLOSE PROXIMITY TO CONSTRUCTION SCALE: 1"=1'-0"

ADDITIONAL CHARTS AS REQUIRED BY CITY

MITIGATION TREES FOR ORIGINAL LANDSCAPE TREES

PT#	Species Removed	Species Provided
15056	Elm	Elm
15055	Elm	Elm
15051	Elm	Elm
15068	Oak	Oak
15078	Elm	Elm
15028	Oak	Oak
15027	Oak	Oak
15012	Desert Willow	Desert Willow
15011	Desert Willow	Desert Willow
5	Mountain Laurel	Mountain Laurel

FINAL CANOPY COVERAGE

Developments of all site must provide a minimum final tree canopy cover as listed below for the entire gross project area outside the regulatory floodplain.

A. Single Family Residential	38%
B. Multi-Family and Nonresidential	25%
C. CRAG Area	15%
Lot Size	120,215 S.F.
Canopy Required (25%)	30,054 S.F.
Existing Trees (Full Credit)	
21 Oak (875 SF Each)	18,375
10 Cedar Elm (875 SF/Each)	8,750
1 Redbud (275 SF/Each)	275
3 Desert Willow (275 SF/Each)	825
2 Hackberry (875 SF/Each)	1,750
1 Pecan (1200 SF/Each)	1,200
1 Mountain Lauel (275 SF/Each)	275
39	
Proposed Trees (90% Credit)	
4 Cedar Elm (787.5 SF/Each)	3,150
10 Desert Willow (247.5 SF/Each)	2,475
9 Retama (247.5 SF/Each)	2,228
12 Texas Persimmon (243 SF/Each)	2,916
8 Texas Mountain Laurel (247.5 SF/Each)	1,980
2 Yaupon Holly (247.5 SF/Each)	495
3 Live Oak (787.5 SF/Each)	2,363
3 Mexican Sycamore (1080 SF/Each)	3,240
51	
Total Canopy Provided	50,296 S.F.
New Canopy Required	-20,242 S.F.

Parking Lot Shading

Total Paved Area	19,298 SF		
Square Feet of Shaded Area for 25%	4824.5 SF	Minimum required	20 Points
Square Feet of Shaded Area for 35%	6754.3 SF	Additional	5 Points
Square Feet of Shaded Area for 50%	9649 SF	Additional	15 Points
SF Required	4824.5		
Existing Tree Shade Credits	3450		
Proposed Tree Shade Credits	8012.5		
Total Shade Credits	11462.5		
Parking Lot Shading Points Earned	35		

MITIGATION SUMMARY

Mitigation Inches Necessary for Heritage Trees	0
Existing Significant Trees- Total Caliper Inches	245
Required Significant Tree Preservation	40%
Significant Trees Preserved	97%

REVISIONS

NO.	DATE	DESCRIPTION

TREE PRESERVATION NOTES AND DETAILS

WORLD HERITAGE CENTER
SAN ANTONIO, TEXAS

DUNAWAY
118 Broadway • Suite 204 • San Antonio, Texas 78205
Tel: 210.787.5244
TX REG. F-11149

muñoz
723 S. Flores • San Antonio, Texas 78204
210.349.1183 • www.munoz-co.com

PRELIMINARY
FOR REVIEW ONLY
These documents are for Design Review and not intended for Construction, Bidding or Permit Purposes. They were prepared by, or under the supervision of:
Bryan Kye Mask
L.A.# 2369

JOB NO.	5675.001
DESIGNED BY:	TLL
DRAWN BY:	DAM
CHECKED BY:	BKM
DATE:	12/01/2021
SHEET:	L0.06

FILE PATH: G:\Production\4000\005600\5675\001\PLA\Drawings\WTE CD\Plot Sheets\L\Production\4000\005600\5675\001\PLA\Drawings\WTE CD\Plot Sheets\5675.001-Tree Pres Details

FILENAME: 5675.001-Tree Pres Details.dwg
PLOTTED BY: Damaris Martinez
PLOTTED ON: Thursday, December 02, 2021
PLOTTED AT: 2:05:27 PM
PLOTTER NAME: DWG To PDF.pc3

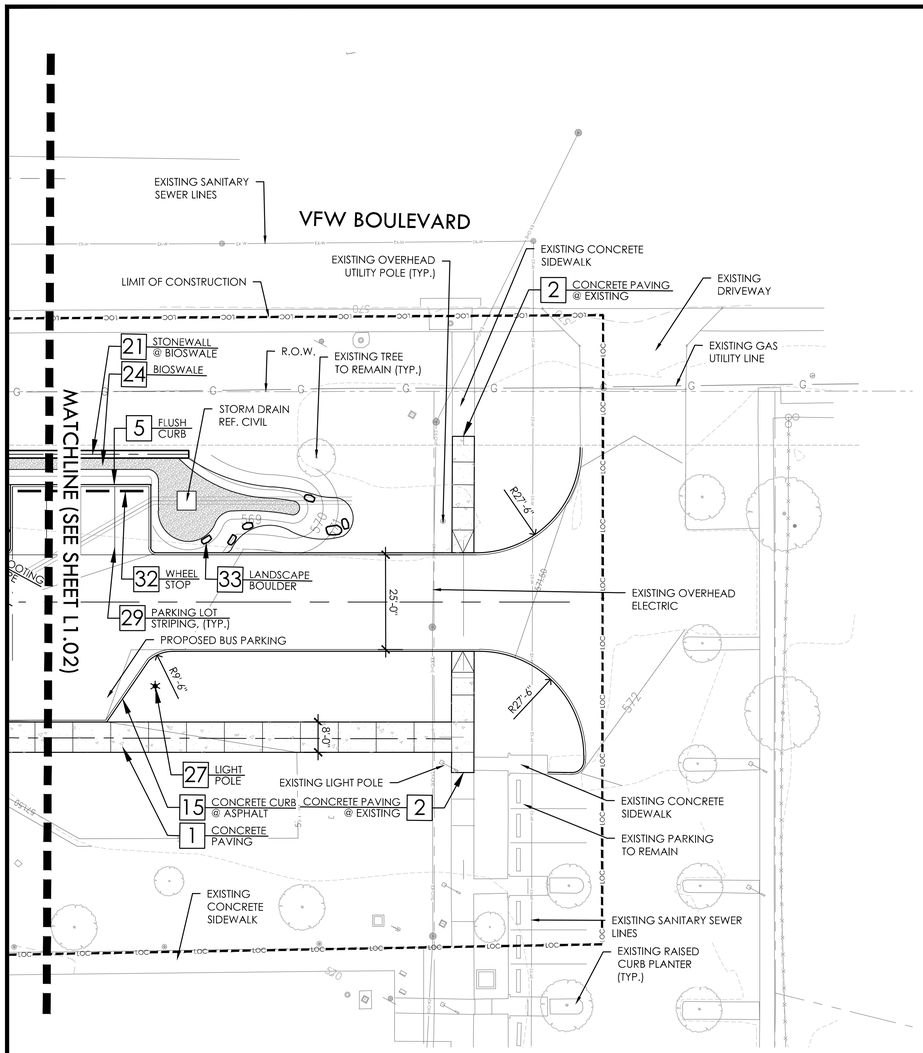

LEGEND

PROPERTY LINE
LIMIT OF CONSTRUCTION
DRIVE CENTER LINE
EXISTING CONTOURS
PROPOSED CONTOURS
FENCE LINE
OVERHEAD ELECTRIC
TRAIL CENTERLINE
EXISTING CONCRETE CURB
EXPANSION JOINT
CONTROL JOINT
EXISTING TREE TO REMAIN

CONSTRUCTION KEY

KEY	DESCRIPTION	DETAIL NO:	DETAIL SHEET:
1	CONCRETE PAVING	A	L3.01
2	4" CONCRETE PAVING @ EXISTING	C	L3.01
3	SCORED CONCRETE PAVING	D	L3.01
4	CONCRETE BANDING	E	L3.01
5	FLUSH CURB	F	L3.01
6	STONE PAVERS @ PLANTING	G	L3.01
7	PEBBLE PAVING	H	L3.01
8	PAVING LAYOUT	I	L3.01
9	STONE PAVING BAND	A	L3.02
10	PEBBLE PAVING @ CONCRETE	B	L3.02
11	CONCRETE PAVING @ PLANTING	C	L3.02
12	DECOMPOSED GRANITE	D	L3.02
13	STONE PAVERS	E	L3.02
14	SEAT WALL @ PAVERS	F	L3.02
15	CONCRETE CURB @ ASPHALT	G	L3.02
16	ACCESSIBLE RAMP	H	L3.02
17	FREESTANDING STONE WALL	A	L3.03
18	SEAT WALL	E	L3.03
19	STONE WALL	A	L3.04
20	CUT STONE SEAT	B	L3.04
21	STONE WALL @ BIOSWALE	A	L3.05
22	BIOSWALE @ CULVERT	B	L3.05
23	BIOSWALE @ PARKING	C	L3.05
24	BIOSWALE	D	L3.05
25	RECESSED WALL LIGHT FIXTURE	A	L3.06
26	GARDEN BOLLARD	D	L3.06
27	LIGHT POLE	E	L3.06
28	IN-GRADE LIGHT	F	L3.06
29	PARKING LOT STRIPING	A	L3.07
30	HANDICAP SYMBOL	B	L3.07
31	HANDICAP PARKING SIGN	C	L3.07
32	WHEEL STOP	D	L3.07
33	LANDSCAPE BOULDER	E	L3.07
34	MULCH	B	L4.07
35	CONCRETE TRAIL PAVING	C	L3.04
36	RETAINING SIGN WALL	D	L3.04
37	LIGHT FOOTING ON SLOPE	F	L3.05

NORTH

GRAPHIC SCALE
0 20 40
1 inch = 20'

REVISIONS

NO.	DATE	DESCRIPTION

DUNAWAY
1118 Broadway • Suite 201A • San Antonio, Texas 78205
Tel: 210.267.5246
TBPELS F-11148

muñoz
723 S. Flores • San Antonio, Texas 78204
210.349.1163 • www.munoz-co.com

LAYOUT PLAN

WORLD HERITAGE CENTER
SAN ANTONIO, TEXAS

PRELIMINARY
FOR REVIEW ONLY
These documents are for Design Review and not intended for Construction, Bidding or Permit Purposes. They were prepared by, or under the supervision of:
Bryan Kye Mask
L.A.# 2369

JOB NO.	5675.001
DESIGNED BY:	TLL
DRAWN BY:	MMP
CHECKED BY:	BKM
DATE:	12/01/2021
SHEET:	L1.01

FILE PATH: G:\Production\4000\5600\5675\001\BA\D\wing\95% CD\Pat Sheets\Production\4000\5600\5675\001\BA\D\wing\95% CD\Pat Sheets\5675.001 Layout Plan

FILENAME: 5675.001 Layout Plan.dwg
PLOTTED BY: Dawson Kertcher
PLOTTED ON: Thursday, December 02, 2021
PLOTTED AT: 2:25:02 PM
PLOTTED WITH: TLWC 19 PDF.pc3

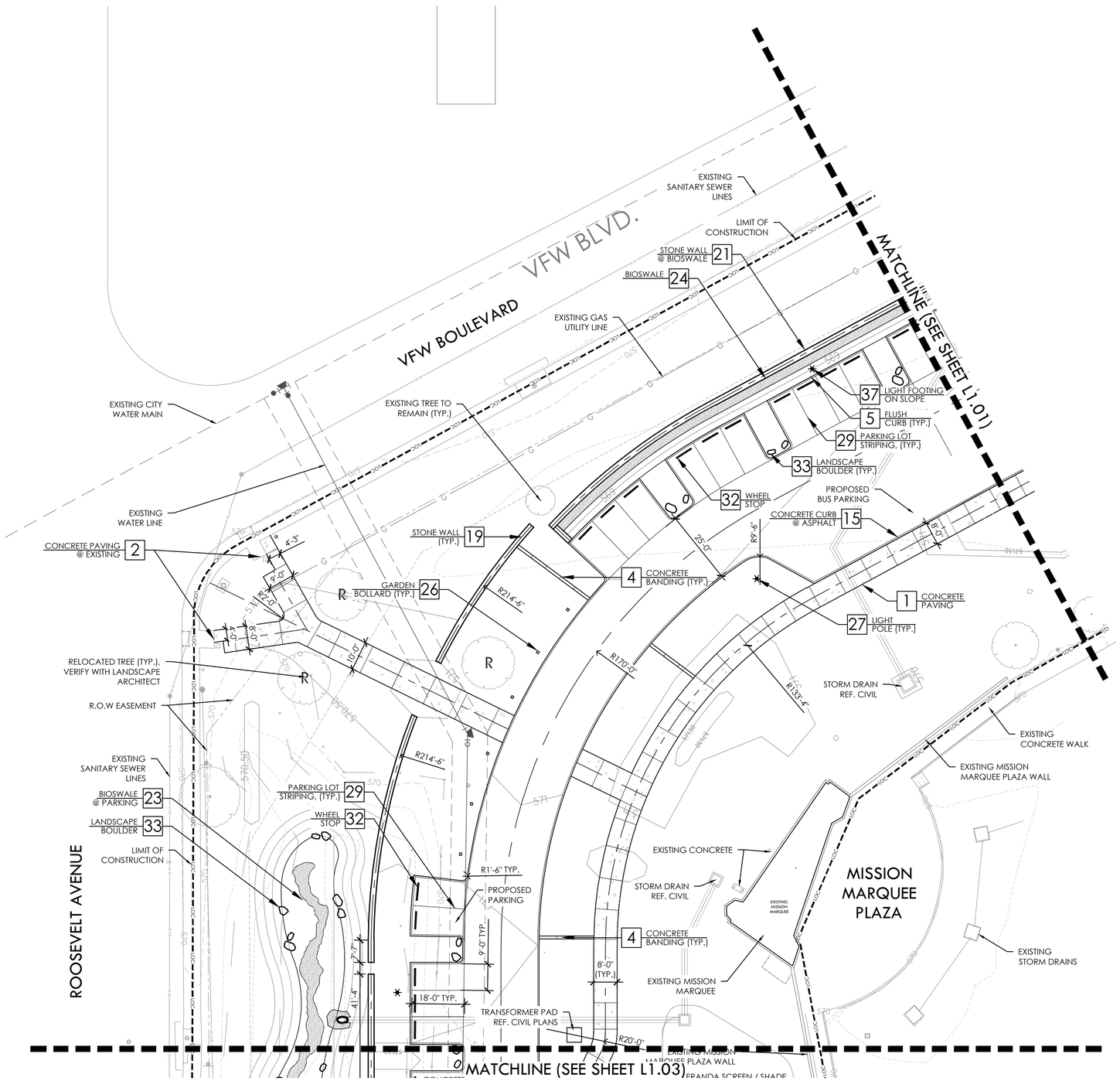

LEGEND

PROPERTY LINE
LIMIT OF CONSTRUCTION
DRIVE CENTER LINE
EXISTING CONTOURS
PROPOSED CONTOURS
FENCE LINE
OVERHEAD ELECTRIC
TRAIL CENTERLINE
EXISTING CONCRETE CURB
EXPANSION JOINT
CONTROL JOINT

EXISTING TREE TO REMAIN

CONSTRUCTION KEY

KEY	DESCRIPTION	DETAIL NO:	DETAIL SHEET:
1	CONCRETE PAVING	A	L3.01
2	4" CONCRETE PAVING @ EXISTING	C	L3.01
3	SCORED CONCRETE PAVING	D	L3.01
4	CONCRETE BANDING	E	L3.01
5	FLUSH CURB	F	L3.01
6	STONE PAVERS @ PLANTING	G	L3.01
7	PEBBLE PAVING	H	L3.01
8	PAVING LAYOUT	I	L3.01
9	STONE PAVING BAND	A	L3.02
10	PEBBLE PAVING @ CONCRETE	B	L3.02
11	CONCRETE PAVING @ PLANTING	C	L3.02
12	DECOMPOSED GRANITE	D	L3.02
13	STONE PAVERS	E	L3.02
14	SEAT WALL @ PAVERS	F	L3.02
15	CONCRETE CURB @ ASPHALT	G	L3.02
16	ACCESSIBLE RAMP	H	L3.02
17	FREESTANDING STONE WALL	A	L3.03
18	SEAT WALL	E	L3.03
19	STONE WALL	A	L3.04
20	CUT STONE SEAT	B	L3.04
21	STONE WALL @ BIOSWALE	A	L3.05
22	BIOSWALE @ CULVERT	B	L3.05
23	BIOSWALE @ PARKING	C	L3.05
24	BIOSWALE	D	L3.05
25	RECESSED WALL LIGHT FIXTURE	A	L3.06
26	GARDEN BOLLARD	D	L3.06
27	LIGHT POLE	E	L3.06
28	IN-GRADE LIGHT	F	L3.06
29	PARKING LOT STRIPING	A	L3.07
30	HANDICAP SYMBOL	B	L3.07
31	HANDICAP PARKING SIGN	C	L3.07
32	WHEEL STOP	D	L3.07
33	LANDSCAPE BOULDER	E	L3.07
34	MULCH	B	L4.07
35	CONCRETE TRAIL PAVING	C	L3.04
36	RETAINING SIGN WALL	D	L3.04
37	LIGHT FOOTING ON SLOPE	F	L3.05

NORTH

GRAPHIC SCALE
0 20 40
1 inch = 20'

REVISIONS

NO.	DATE	DESCRIPTION

DUNAWAY
118 Broadway • Suite 2014 • San Antonio, Texas 78205
Tel: 210.267.5246
TBPELS F-11148

muñoz
723 S. Flores • San Antonio, Texas 78204
210.349.1163 • www.munoz-co.com

LAYOUT PLAN

WORLD HERITAGE CENTER
SAN ANTONIO, TEXAS

PRELIMINARY
FOR REVIEW ONLY
These documents are for Design Review and not intended for Construction, Bidding or Permit Purposes. They were prepared by, or under the supervision of:
Bryan Kye Mask
L.A.# 2369

JOB NO.	5675.001
DESIGNED BY:	TLL
DRAWN BY:	MMP
CHECKED BY:	BKM
DATE:	12/01/2021
SHEET:	L1.02

FULL PATH: G:\Production\5675\005\5675\5675001\PLA\Drawings\95% CD\Plot Sheets\G-Prod\action\8001\8501\5675\5701\PLA\Drawings\95% CD\Plot Sheets\5675.001-Layout Plan-

FILENAME: 5675.001-Layout Plan.dwg
PLOTTED BY: Dennis Martinez
LAST SAVED: Thursday, December 02, 2021
PLOTTED ON: Dec 02, 2021
PLOTTED WITH: DWG To PDF.pc3

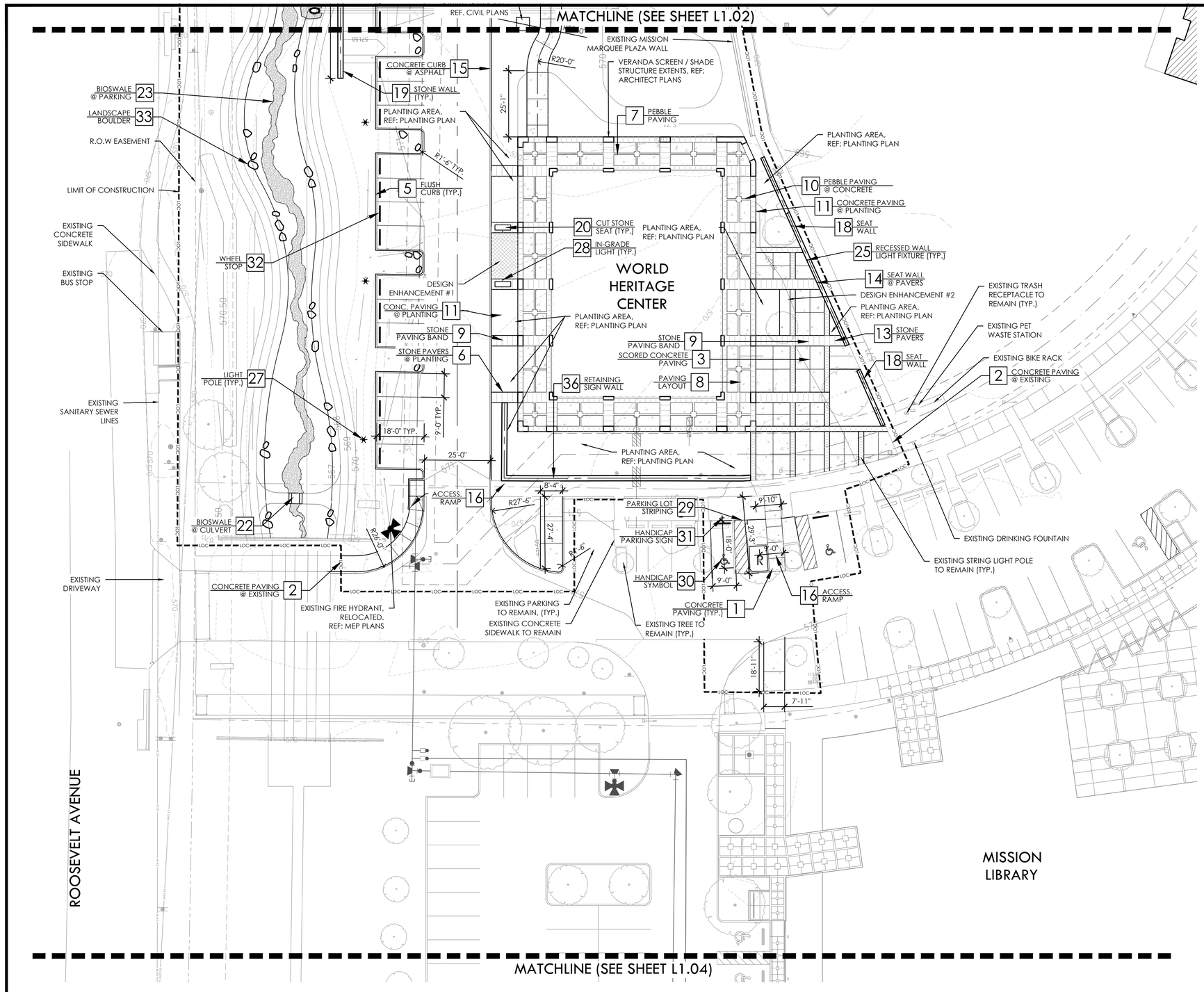

LEGEND

- PROPERTY LINE
- LIMIT OF CONSTRUCTION
- DRIVE CENTER LINE
- EXISTING CONTOURS
- PROPOSED CONTOURS
- FENCE LINE
- OVERHEAD ELECTRIC
- TRAIL CENTERLINE
- EXISTING CONCRETE CURB
- EXPANSION JOINT
- CONTROL JOINT
- EXISTING TREE TO REMAIN

CONSTRUCTION KEY

KEY	DESCRIPTION	DETAIL NO:	DETAIL SHEET:
1	CONCRETE PAVING	A	L3.01
2	4" CONCRETE PAVING @ EXISTING	C	L3.01
3	SCORED CONCRETE PAVING	D	L3.01
4	CONCRETE BANDING	E	L3.01
5	FLUSH CURB	F	L3.01
6	STONE PAVERS @ PLANTING	G	L3.01
7	PEBBLE PAVING	H	L3.01
8	PAVING LAYOUT	I	L3.01
9	STONE PAVING BAND	A	L3.02
10	PEBBLE PAVING @ CONCRETE	B	L3.02
11	CONCRETE PAVING @ PLANTING	C	L3.02
12	DECOMPOSED GRANITE	D	L3.02
13	STONE PAVERS	E	L3.02
14	SEAT WALL @ PAVERS	F	L3.02
15	CONCRETE CURB @ ASPHALT	G	L3.02
16	ACCESSIBLE RAMP	H	L3.02
17	FREESTANDING STONE WALL	A	L3.03
18	SEAT WALL	E	L3.03
19	STONE WALL	A	L3.04
20	CUT STONE SEAT	B	L3.04
21	STONE WALL @ BIOSWALE	A	L3.05
22	BIOSWALE @ CULVERT	B	L3.05
23	BIOSWALE @ PARKING	C	L3.05
24	BIOSWALE	D	L3.05
25	RECESSED WALL LIGHT FIXTURE	A	L3.06
26	GARDEN BOLLARD	D	L3.06
27	LIGHT POLE	E	L3.06
28	IN-GRADE LIGHT	F	L3.06
29	PARKING LOT STRIPING	A	L3.07
30	HANDICAP SYMBOL	B	L3.07
31	HANDICAP PARKING SIGN	C	L3.07
32	WHEEL STOP	D	L3.07
33	LANDSCAPE BOULDER	E	L3.07
34	MULCH	B	L4.07
35	CONCRETE TRAIL PAVING	C	L3.04
36	RETAINING SIGN WALL	D	L3.04
37	LIGHT FOOTING ON SLOPE	F	L3.05

NORTH

GRAPHIC SCALE
0 20 40
1 inch = 20'

REVISIONS

NO.	DATE	DESCRIPTION

DUNAWAY
118 Broadway • Suite 2014 • San Antonio, Texas 78205
Tel: 210.267.5246
TBPELS F-11148

muñoz
723 S. Flores • San Antonio, Texas 78204
210.349.1163 • www.munoz-co.com

LAYOUT PLAN

WORLD HERITAGE CENTER
SAN ANTONIO, TEXAS

PRELIMINARY
FOR REVIEW ONLY
These documents are for Design Review and not intended for Construction, Bidding or Permit Purposes. They were prepared by, or under the supervision of:
Bryan Kye Mask
L.A.# 2369

JOB NO.	5675.001
DESIGNED BY:	TLL
DRAWN BY:	MMP
CHECKED BY:	BKM
DATE:	12/01/2021
SHEET:	L1.03

FILE PATH: G:\Production\4000\5600\5675\001\PA\Drawings\95%. CD\Plot Sheets\Production\4000\5600\5675\001\PA\Drawings\95%. CD\Plot Sheets\5675.001-Layout Plan

FILENAME: 5675.001-Layout Plan.dwg
PLOTTED BY: Dunaway Martinez
LAST SAVED: Thursday, December 02, 2021
PLOTTED ON: 2:31:06 PM
PLOTTED WITH: DWG To PDF.pc3

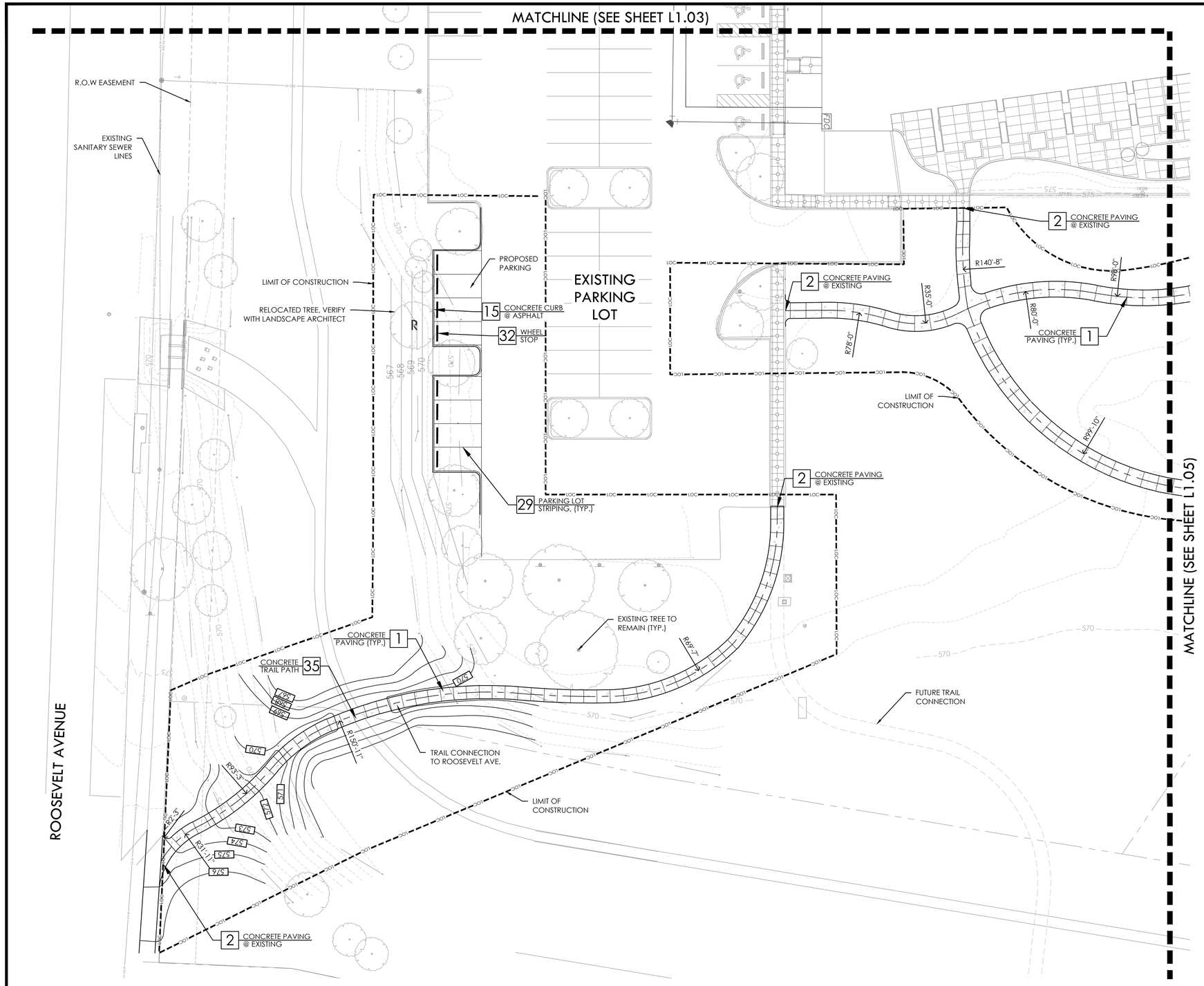

LEGEND

- PROPERTY LINE
- LIMIT OF CONSTRUCTION
- DRIVE CENTER LINE
- EXISTING CONTOURS
- PROPOSED CONTOURS
- FENCE LINE
- OVERHEAD ELECTRIC
- TRAIL CENTERLINE
- EXISTING CONCRETE CURB
- EXPANSION JOINT
- CONTROL JOINT
- EXISTING TREE TO REMAIN

CONSTRUCTION KEY

KEY	DESCRIPTION	DETAIL NO:	DETAIL SHEET:
1	CONCRETE PAVING	A	L3.01
2	4" CONCRETE PAVING @ EXISTING	C	L3.01
3	SCORED CONCRETE PAVING	D	L3.01
4	CONCRETE BANDING	E	L3.01
5	FLUSH CURB	F	L3.01
6	STONE PAVERS @ PLANTING	G	L3.01
7	PEBBLE PAVING	H	L3.01
8	PAVING LAYOUT	I	L3.01
9	STONE PAVING BAND	A	L3.02
10	PEBBLE PAVING @ CONCRETE	B	L3.02
11	CONCRETE PAVING @ PLANTING	C	L3.02
12	DECOMPOSED GRANITE	D	L3.02
13	STONE PAVERS	E	L3.02
14	SEAT WALL @ PAVERS	F	L3.02
15	CONCRETE CURB @ ASPHALT	G	L3.02
16	ACCESSIBLE RAMP	H	L3.02
17	FREESTANDING STONE WALL	A	L3.03
18	SEAT WALL	E	L3.03
19	STONE WALL	A	L3.04
20	CUT STONE SEAT	B	L3.04
21	STONE WALL @ BIOSWALE	A	L3.05
22	BIOSWALE @ CULVERT	B	L3.05
23	BIOSWALE @ PARKING	C	L3.05
24	BIOSWALE	D	L3.05
25	RECESSED WALL LIGHT FIXTURE	A	L3.06
26	GARDEN BOLLARD	D	L3.06
27	LIGHT POLE	E	L3.06
28	IN-GRADE LIGHT	F	L3.06
29	PARKING LOT STRIPING	A	L3.07
30	HANDICAP SYMBOL	B	L3.07
31	HANDICAP PARKING SIGN	C	L3.07
32	WHEEL STOP	D	L3.07
33	LANDSCAPE BOULDER	E	L3.07
34	MULCH	B	L4.07
35	CONCRETE TRAIL PAVING	C	L3.04
36	RETAINING SIGN WALL	D	L3.04
37	LIGHT FOOTING ON SLOPE	F	L3.05

NORTH

GRAPHIC SCALE
0 20 40
1 inch = 20'

NO.	DATE	DESCRIPTION

REVISIONS

DUNAWAY
1118 Broadway • Suite 204 • San Antonio, Texas 78205
Tel: 210.267.0246
TX REG. F-11142

muñoz
723 S. Flores • San Antonio, Texas 78204
210.349.1163 • www.munoz-co.com

LAYOUT PLAN

WORLD HERITAGE CENTER
SAN ANTONIO, TEXAS

PRELIMINARY
FOR REVIEW ONLY
These documents are for Design Review and not intended for Construction, Bidding or Permit Purposes. They were prepared by, or under the supervision of:
Bryan Kye Mask
L.A.# 2369

JOB NO.	5675.001
DESIGNED BY:	TLL
DRAWN BY:	MMP
CHECKED BY:	BKM
DATE:	12/01/2021
SHEET:	L1.04

FULL PATH: G:\Production\4000\05600\5675\001\RA\Drawings\05% CD\Plot Sheets\; J:\Production\4000\05600\5675\001\RA\Drawings\05% CD\Plot Sheets\5675.001 Layout Plan

FILENAME: 5675.001-Layout Plan.dwg
PLOTTED BY: Danielle Ramirez
PLOTTING DATE: Thursday, December 02, 2021
PLOTTED AT: 2:33:54 PM
PLOTTED WITH: DWG To PDF.pc3

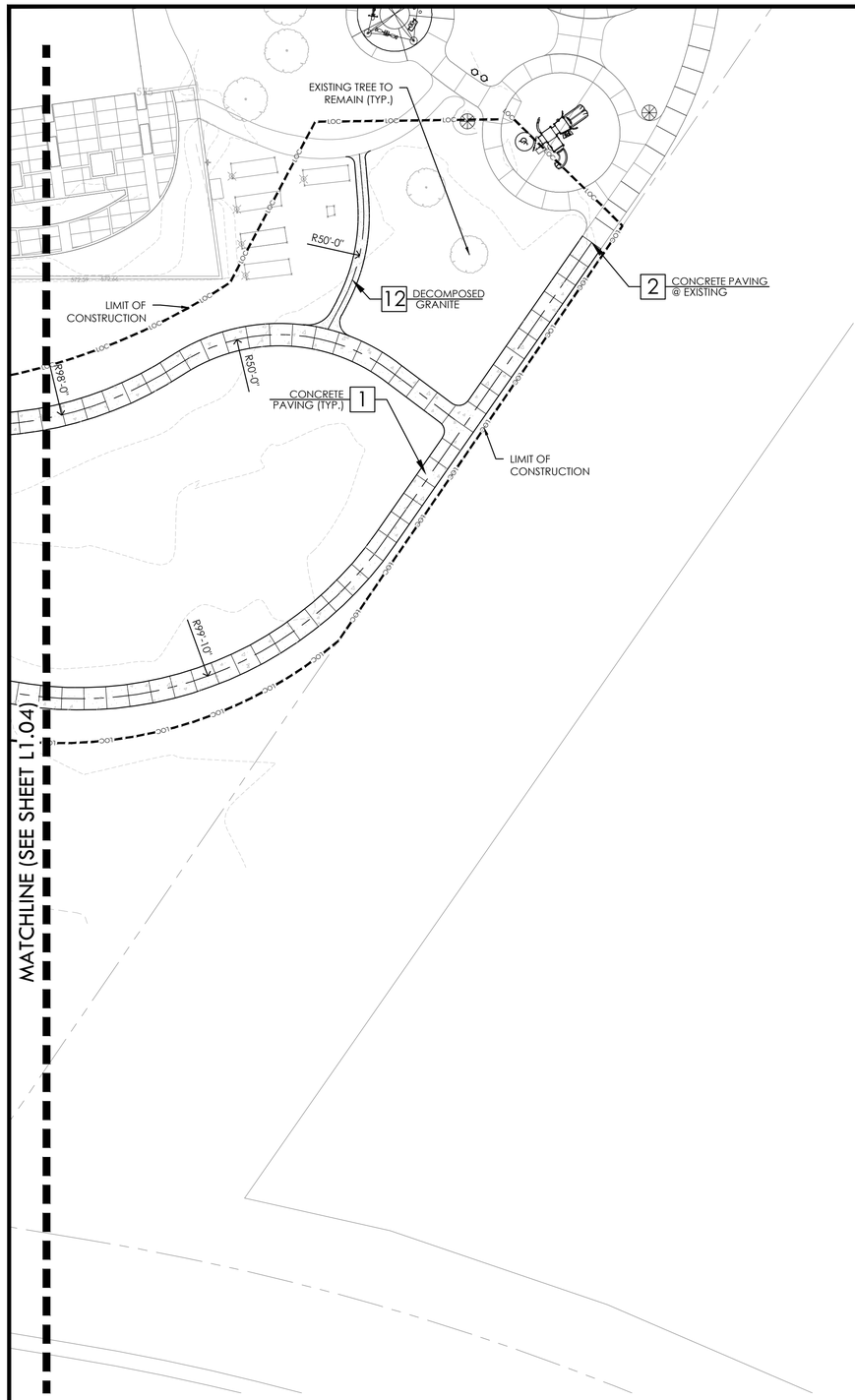

LEGEND

- PROPERTY LINE
- LIMIT OF CONSTRUCTION
- DRIVE CENTER LINE
- EXISTING CONTOURS
- PROPOSED CONTOURS
- FENCE LINE
- OVERHEAD ELECTRIC
- TRAIL CENTERLINE
- EXISTING CONCRETE CURB
- EXPANSION JOINT
- CONTROL JOINT
- EXISTING TREE TO REMAIN

CONSTRUCTION KEY

KEY	DESCRIPTION	DETAIL NO:	DETAIL SHEET:
1	CONCRETE PAVING	A	L3.01
2	4" CONCRETE PAVING @ EXISTING	C	L3.01
3	SCORED CONCRETE PAVING	D	L3.01
4	CONCRETE BANDING	E	L3.01
5	FLUSH CURB	F	L3.01
6	STONE PAVERS @ PLANTING	G	L3.01
7	PEBBLE PAVING	H	L3.01
8	PAVING LAYOUT	I	L3.01
9	STONE PAVING BAND	A	L3.02
10	PEBBLE PAVING @ CONCRETE	B	L3.02
11	CONCRETE PAVING @ PLANTING	C	L3.02
12	DECOMPOSED GRANITE	D	L3.02
13	STONE PAVERS	E	L3.02
14	SEAT WALL @ PAVERS	F	L3.02
15	CONCRETE CURB @ ASPHALT	G	L3.02
16	ACCESSIBLE RAMP	H	L3.02
17	FREESTANDING STONE WALL	A	L3.03
18	SEAT WALL	E	L3.03
19	STONE WALL	A	L3.04
20	CUT STONE SEAT	B	L3.04
21	STONE WALL @ BIOSWALE	A	L3.05
22	BIOSWALE @ CULVERT	B	L3.05
23	BIOSWALE @ PARKING	C	L3.05
24	BIOSWALE	D	L3.05
25	RECESSED WALL LIGHT FIXTURE	A	L3.06
26	GARDEN BOLLARD	D	L3.06
27	LIGHT POLE	E	L3.06
28	IN-GRADE LIGHT	F	L3.06
29	PARKING LOT STRIPING	A	L3.07
30	HANDICAP SYMBOL	B	L3.07
31	HANDICAP PARKING SIGN	C	L3.07
32	WHEEL STOP	D	L3.07
33	LANDSCAPE BOULDER	E	L3.07
34	MULCH	B	L4.07
35	CONCRETE TRAIL PAVING	C	L3.04
36	RETAINING SIGN WALL	D	L3.04
37	LIGHT FOOTING ON SLOPE	F	L3.05

NORTH

GRAPHIC SCALE
0 20 40
1 inch = 20'

REVISIONS

NO.	DATE	DESCRIPTION

DUNAWAY
1118 Broadway • Suite 201A • San Antonio, Texas 78205
Tel: 210.267.5246
TBPELS F-11148

muñoz
723 S. Flores • San Antonio, Texas 78204
210.349.1163 • www.munoz-co.com

LAYOUT PLAN

WORLD HERITAGE CENTER
SAN ANTONIO, TEXAS

PRELIMINARY
FOR REVIEW ONLY
These documents are for Design Review and not intended for Construction, Bidding or Permit Purposes. They were prepared by, or under the supervision of:
Bryan Kye Mask
L.A.# 2369

JOB NO.	5675.001
DESIGNED BY:	TLL
DRAWN BY:	MMP
CHECKED BY:	BKM
DATE:	12/01/2021
SHEET:	L1.05

FILE PATH: G:\Production\400\005\005\5675\001\RA\Drawings\95% CD\Plot Sheets\Production\400\005\005\5675\001\PA\Drawings\95% CD\Plot Sheets\5675.001 Layout Plan

FILENAME: 5675.001 Layout Plan.dwg
PLOTTED BY: Damaris Ramirez
LAST SAVED: Thursday, December 02, 2021
PLOTTED ON: 12-2-2021
PLOTTED WITH: DWG To PDF.pc3

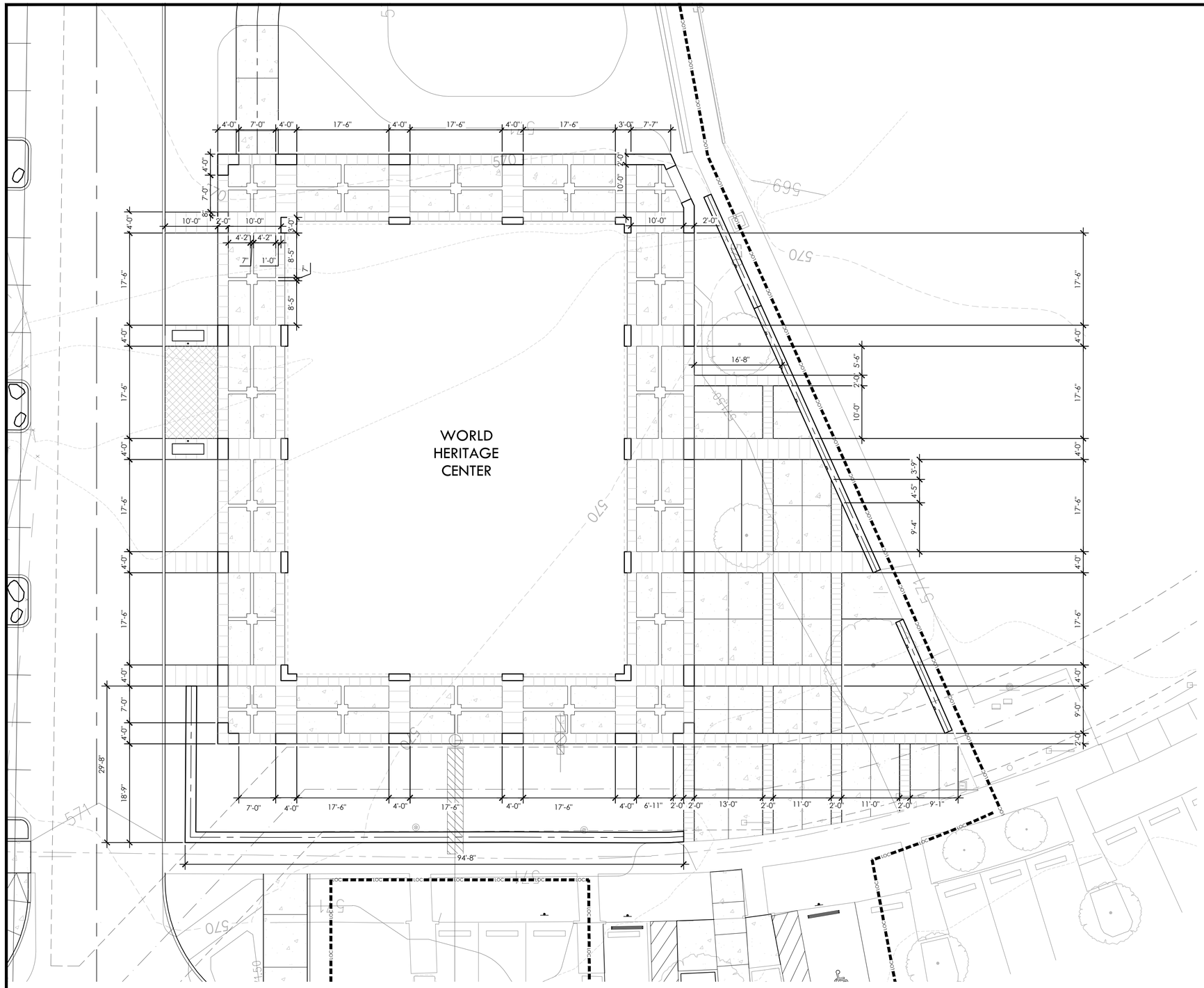

LEGEND

PROPERTY LINE	
LIMIT OF CONSTRUCTION	
DRIVE CENTER LINE	
EXISTING CONTOURS	
PROPOSED CONTOURS	
FENCE LINE	
OVERHEAD ELECTRIC	OH
TRAIL CENTERLINE	
EXISTING CONCRETE CURB	
EXPANSION JOINT	
CONTROL JOINT	
EXISTING TREE TO REMAIN	

CONSTRUCTION KEY

KEY	DESCRIPTION	DETAIL NO:	DETAIL SHEET:
1	CONCRETE PAVING	A	L3.01
2	4" CONCRETE PAVING @ EXISTING	C	L3.01
3	SCORED CONCRETE PAVING	D	L3.01
4	CONCRETE BANDING	E	L3.01
5	FLUSH CURB	F	L3.01
6	STONE PAVERS @ PLANTING	G	L3.01
7	PEBBLE PAVING	H	L3.01
8	PAVING LAYOUT	I	L3.01
9	STONE PAVING BAND	A	L3.02
10	PEBBLE PAVING @ CONCRETE	B	L3.02
11	CONCRETE PAVING @ PLANTING	C	L3.02
12	DECOMPOSED GRANITE	D	L3.02
13	STONE PAVERS	E	L3.02
14	SEAT WALL @ PAVERS	F	L3.02
15	CONCRETE CURB @ ASPHALT	G	L3.02
16	ACCESSIBLE RAMP	H	L3.02
17	FREESTANDING STONE WALL	A	L3.03
18	SEAT WALL	E	L3.03
19	STONE WALL	A	L3.04
20	CUT STONE SEAT	B	L3.04
21	STONE WALL @ BIOSWALE	A	L3.05
22	BIOSWALE @ CULVERT	B	L3.05
23	BIOSWALE @ PARKING	C	L3.05
24	BIOSWALE	D	L3.05
25	RECESSED WALL LIGHT FIXTURE	A	L3.06
26	GARDEN BOLLARD	D	L3.06
27	LIGHT POLE	E	L3.06
28	IN-GRADE LIGHT	F	L3.06
29	PARKING LOT STRIPING	A	L3.07
30	HANDICAP SYMBOL	B	L3.07
31	HANDICAP PARKING SIGN	C	L3.07
32	WHEEL STOP	D	L3.07
33	LANDSCAPE BOULDER	E	L3.07
34	MULCH	B	L4.07
35	CONCRETE TRAIL PAVING	C	L3.04
36	RETAINING SIGN WALL	D	L3.04
37	LIGHT FOOTING ON SLOPE	F	L3.05

NORTH

GRAPHIC SCALE

0 10 20

1 inch = 10'

REVISIONS

NO.	DATE	DESCRIPTION

DUNAWAY
1118 Broadway • Suite 201 • San Antonio, Texas 78205
Tel: 210.267.5246
TBPELS F-11148

muñoz
723 S. Flores • San Antonio, Texas 78204
210.349.1163 • www.munoz-co.com

DIMENSION PLAN

WORLD HERITAGE CENTER
SAN ANTONIO, TEXAS

PRELIMINARY
FOR REVIEW ONLY
These documents are for Design Review and not intended for Construction, Bidding or Permit Purposes. They were prepared by, or under the supervision of:
Bryan Kye Mask
L.A.# 2369

JOB NO.	5675.001
DESIGNED BY:	TLL
DRAWN BY:	MMP
CHECKED BY:	BKM
DATE:	12/01/2021
SHEET:	L1.06

FILE PATH: G:\Production\4000\5600\5675\001\PA\Drawings\95% CD\Plot Sheets\<Production\4000\5600\5675\001\PA\Drawings\95% CD\Plot Sheets\5675.001-Layout Plan

FILENAME: 5675.001-Layout Plan.dwg
PLOTTED BY: Thomas Lindsey
PLOTTED ON: Thursday, December 02, 2021
PLOTTED AT: 2:39:24 PM
PLOTTED WITH: DWG to PDF.pc3

CONCRETE FINISH SCHEDULE	
TYPE	**DESCRIPTION**
A	CONCRETE PAVING - MATCH COLOR OF CONCRETE AT ADJACENT LIBRARY PROPERTY

PAVING TYPE SCHEDULE	
TYPE	**DESCRIPTION**
A	STONE PAVERS, 24" WIDTH - 'LEUDERS' TAN
B	PEBBLE PAVING - 1/2" -1" BLACK MEXICAN BEACH PEBBLES, REF. SPECIFICATIONS

STONE WALL VENEER SCHEDULE	
TYPE	**DESCRIPTION**
A	FREE STANDING WALL STONE VENEER - MATCH STONE TYPE/PATTERN OF ADJACNET MISSION LIBRARY
B	LOW SEAT WALL STONE VENEER - MATCH STONE TYPE/PATTERN OF ADJACENT MISSION LIBRARY

SHEET INDEX:

NO. SHEET NAME

L3.00 DETAIL INDEX
L3.01 SITE DETAILS
- A CONCRETE PAVING
- B EXPANSION JOINT
- C 4" CONCRETE PAVING @ EXISTING
- D SCORED CONCRETE PAVING
- E CONCRETE BANDING
- F FLUSH CURB
- G STONE PAVERS @ PLANTING
- H PEBBLE PAVING
- I PAVING LAYOUT

L3.02 SITE DETAILS
- A STONE PAVING BAND
- B PEBBLE PAVING @ CONCRETE
- C CONCRETE PAVING @ PLANTING
- D DECOMPOSED GRANITE
- E STONE PAVERS
- F SEAT WALL @ PAVERS
- G CONCRETE CURB @ ASPHALT
- H ACCESSIBLE RAMP
- I ACCESS. RAMP W/ CURB SIDES

L3.03 SITE DETAILS
- A FREESTANDING STONE WALL TYPE 'A'
- B ELEVATION: STONE WALL END (TYP.)
- C STONE WALL TOP
- D ELEVATION: STONE WALL TYPE 'A'
- E SEATWALL
- F ELEVATION: LOW SEAT WALL

L3.04 SITE DETAILS
- A STONE WALL ELEVATION
- B CUT STONE SEAT
- C CONCRETE TRAIL PAVING
- D SECTION: CONCRETE TRAIL PAVING
- E RETAINING SIGN WALL

L3.05 SITE DETAILS
- A ELEVATION: STONE WALL @ BIOSWALE
- B BIOSWALE @ CULVERT
- C BIOSWALE @ PARKING
- D BIOSWALE
- E SECTION: BIOSWALE RETAINING WALL
- F LIGHT FIXTURE FOOTING AT SLOPE

L3.06 LIGHTING DETAILS & SCHEDULE
- A RECESSED WALL LIGHT FIXTURE
- B LIGHT FIXTURE
- C LIGHT FIXTURE FOOTING
- D GARDEN BOLLARD
- E LIGHT POLE
- F IN-GRADE LIGHT

L3.07 SITE DETAILS
- A PARKING LOT STRIPING
- B HANDICAP SYMBOL
- C HANDICAP PARKING SIGN
- D WHEEL STOP
- E LANDSCAPE BOULDER DETAIL

REVISIONS		
NO.	DATE	DESCRIPTION

DETAIL INDEX

DUNAWAY
118 Broadway • Suite 2010 • San Antonio, Texas 78205
Tel. 210.267.0246
TBPELS F-11146

muñoz
723 S. Flores • San Antonio, Texas 78204
210.349.1163 • www.munoz-co.com

WORLD HERITAGE CENTER
SAN ANTONIO, TEXAS

PRELIMINARY
FOR REVIEW ONLY
These documents are for Design Review and not intended for Construction, Bidding or Permit Purposes. They were prepared by, or under the supervision of:
Bryan Kye Mask
L.A.# 2369

JOB NO.	5675.001
DESIGNED BY:	TLL
DRAWN BY:	EAH
CHECKED BY:	BKM
DATE:	12/01/2021
SHEET:	L3.00

FULL PATH: G:\Production\5000\5600\5675\001\PA\Drawings\95% CD\Plot Sheets\Production\5000\5600\5675\001\PA\Drawings\95% CD\Plot Sheets\5675.001 Site Details

FILENAME: 5675.001 Site Details.dwg
PLOTTED BY: Dennis Medoce
PLOTTED ON: Thursday, December 02, 2021
PLOTTED AT: 2:46:09 PM
PLOTTER NAME: DWG To PDF.pc3

NOTES:
1. CONTRACTOR TO PROVIDE 5' X 5' MIN. PAVING MOCK UP OF ALL MATERIALS, FORMING AND FINISH.
2. PROVIDE 2% (1/4" PER FOOT) CROSS SLOPE FOR POSITIVE DRAINAGE UNLESS OTHERWISE INDICATED.
3. PROVIDE 3000 PSI CONCRETE AT 28 DAYS.
4. SCORE JOINTS PER PLAN @ 7'-0" O.C. (MAX - UNLESS OTHERWISE INDICATED)
5. EXPANSION JOINTS @ 30'-0" O.C. (MAX)
6. REFERENCE SITE PLAN & FINISH SCHEDULE FOR CONCRETE FINISH.

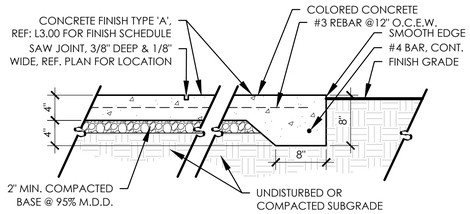

A CONCRETE PAVING

SCALE: 1"=1'-0"

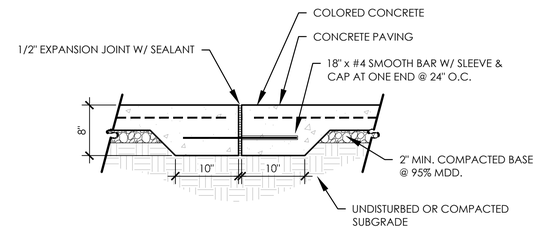

B EXPANSION JOINT

SCALE: 1"=1'-0"

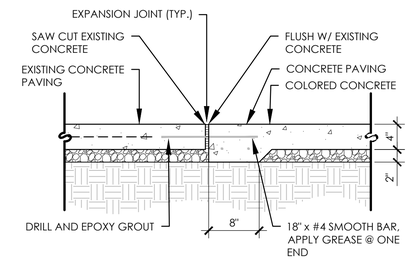

C 4" CONCRETE PAVING @ EXISTING

SCALE: 1"=1'-0"

NOTES:
1. CONTRACTOR TO PROVIDE 6' X 6' MIN. PAVING MOCK UP OF ALL MATERIALS, FORMING AND FINISH.
2. PROVIDE 2% (1/4" PER FOOT) CROSS SLOPE FOR POSITIVE DRAINAGE UNLESS OTHERWISE INDICATED.
3. PROVIDE 3000 PSI CONCRETE AT 28 DAYS.
4. SCORE JOINTS PER PLAN @ 5' X 5' CHECKERED PATTERN
5. EXPANSION JOINTS @ 30'-0" O.C. (MAX)
6. REFERENCE SITE PLAN & FINISH SCHEDULE FOR CONCRETE FINISH.

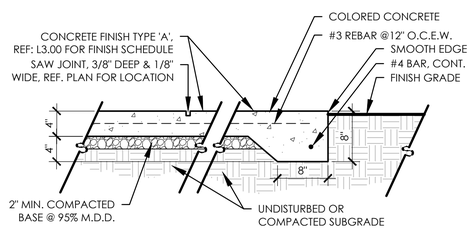

D SCORED CONCRETE PAVING

SCALE: 1"=1'-0"

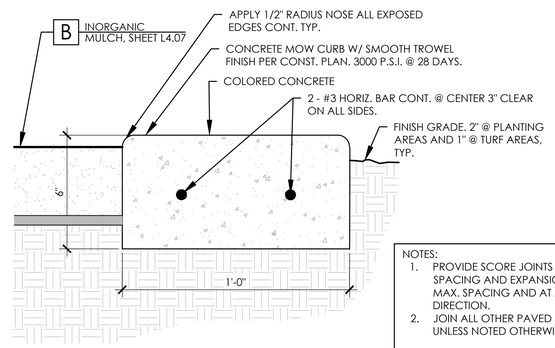

NOTES:
1. PROVIDE SCORE JOINTS @ 5' O.C. MAX. SPACING AND EXPANSION JOINTS @ 20' O.C. MAX. SPACING AND AT ALL CHANGES IN DIRECTION.
2. JOIN ALL OTHER PAVED SURFACES FLUSH, UNLESS NOTED OTHERWISE.

E CONCRETE BANDING

SCALE: 3"=1'-0"

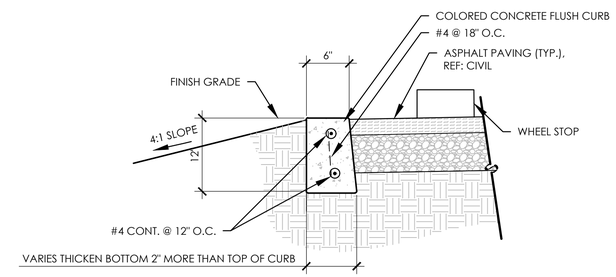

F FLUSH CURB

SCALE: 1" = 1'-0"

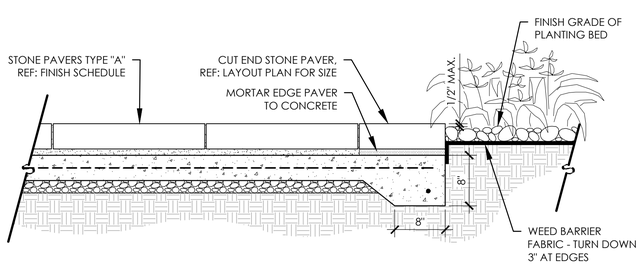

G STONE PAVERS @ PLANTING

SCALE: 1" = 1'-0"

NOTE:
CONTRACTOR TO PROVIDE 5' X 5' MIN. PAVING MOCK UP OF MATERIALS, FORMING AND FINISH.

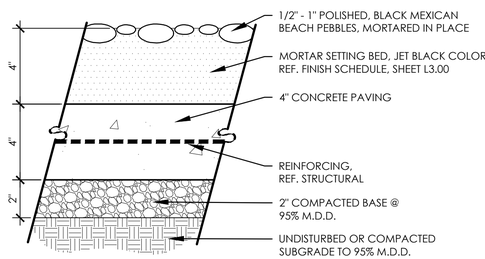

H PEBBLE PAVING

SCALE: 3"=1'-0"

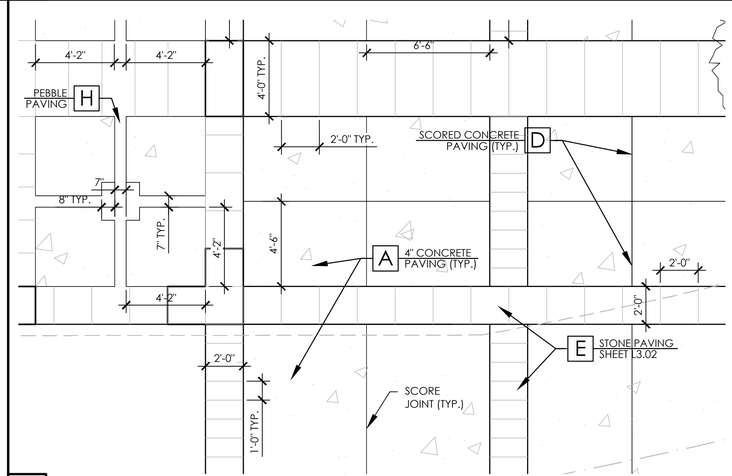

I PAVING LAYOUT

SCALE: 1/4"=1'-0"

REVISIONS		
NO.	DATE	DESCRIPTION

DUNAWAY
118 Broadway • Suite 2016 • San Antonio, Texas 78205
Tel. 210.267.0246
TBPELS F-11146

muñoz
723 S. Flores • San Antonio, Texas 78204
210.349.1163 • www.munoz-co.com

SITE DETAILS

WORLD HERITAGE CENTER
SAN ANTONIO, TEXAS

PRELIMINARY
FOR REVIEW ONLY
These documents are for Design Review and not intended for Construction, Bidding or Permit Purposes. They were prepared by, or under the supervision of:
Bryan Kye Mask
L.A.# 2369

JOB NO.	5675.001
DESIGNED BY:	TLL
DRAWN BY:	EAH
CHECKED BY:	BKM
DATE:	12/01/2021
SHEET:	L3.01

FULL PATH: G:\Production\4000\5650\5675\001\PLAN\Drawings\95% CD\Pbd Sheets\Production\4000\5650\5675\001\PLAN\Drawings\95% CD\Pbd Sheets\5675.001-Site Details
FILENAME: 5675.001-Site Details.dwg
PLOTTED BY: Dennis Medina
PLOTTED ON: Wed Dec 01, 2021
PLOTTED AT: 2-52:09 PM
PLOTTED WITH: DWG To PDF.pc3

*FOOTING DIMENSION AND REINFORCING PER STRUCTURAL ENGINEER'S DETAIL.

NOTES:
1. CONTRACTOR TO VERIFY EXACT VARIATION IN STONE THICKNESS PRIOR TO POURING SUB-BASE.
2. REFER TO MATERIALS SCHEDULE SHEET L3.00 FOR ALL COLORS, MATERIALS AND FINISHES.
3. REFERENCE SITE PLAN FOR LENGTH AND WIDTH OF STONE PAVERS.

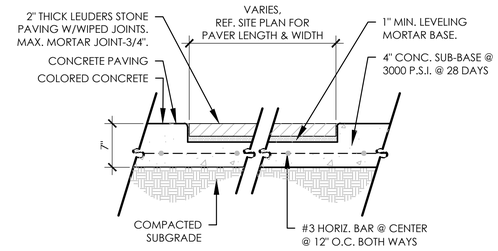

A STONE PAVING BAND

SCALE: 1"=1'-0"

NOTE:
CONTRACTOR TO PROVIDE 5' X 5' MIN. PAVING MOCK UP OF MATERIALS, FORMING, AND FINISH.

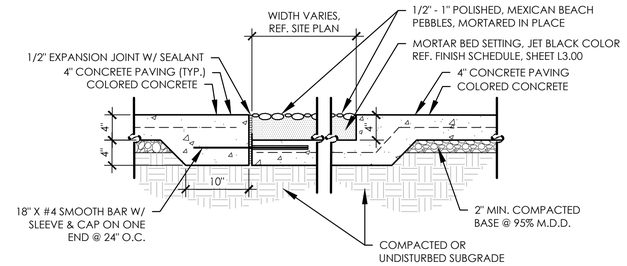

B PEBBLE PAVING @ CONCRETE

SCALE: 3"=1'-0"

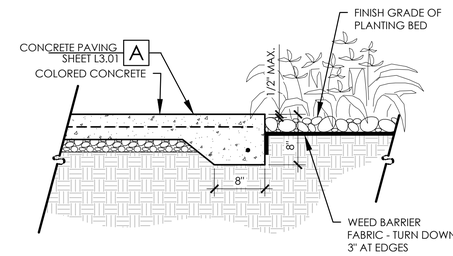

NOTES:
1. CONTRACTOR TO REFERENCE GEOTECH REPORT FOR FINAL DEPTH OF SUBGRADE MATERIALS.
2. CONTRACTOR TO PROVIDE 5' X 5' MIN. MOCK UP OF ALL MATERIALS, FORMING AND FINISH.

C CONCRETE PAVING @ PLANTING

SCALE: 1" = 1'-0"

NOTE:
1. TREAT COMPACTED SUBGRADE WITH HERBICIDE TREATMENT PRIOR TO PLACEMENT OF DECOMPOSED GRANITE.
2. CONTRACTOR TO PROVIDE MOCK UP OF COMPACTED DECOMPOSED GRANITE FOR APPROVAL.

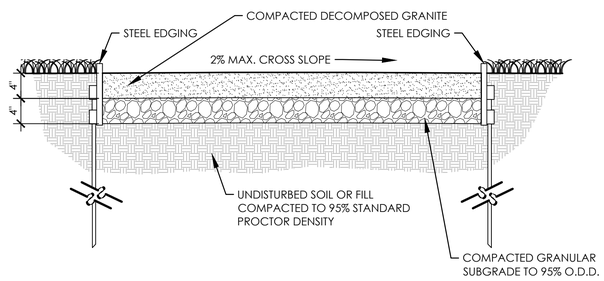

D DECOMPOSED GRANITE

SCALE: 1" = 1'-0"

CONCRETE BASE NOTES:
1. PROVIDE 2% (1/4" PER FOOT) CROSS SLOPE FOR POSITIVE DRAINAGE UNLESS OTHERWISE INDICATED.
2. PROVIDE 3000 PSI CONCRETE AT 28 DAYS.
3. EXPANSION JOINTS @ 30'-0" O.C. (MAX)

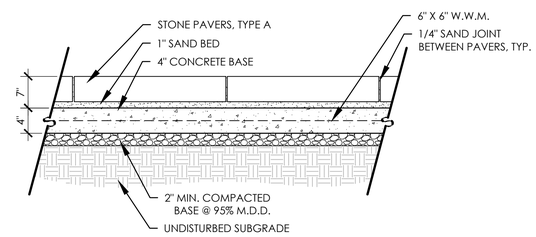

E STONE PAVERS

SCALE: 1" = 1'-0"

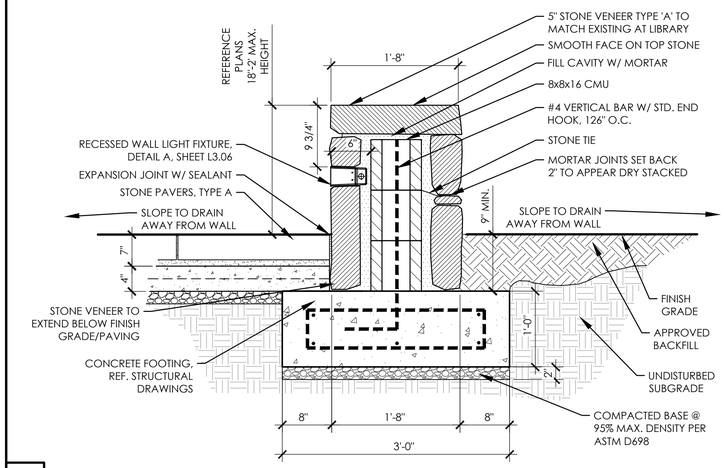

F SEATWALL @ PAVERS

SCALE: 1" = 1'-0"

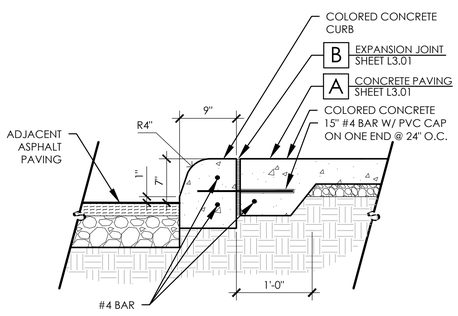

G CONCRETE CURB @ ASPHALT

SCALE: 1" = 1'-0"

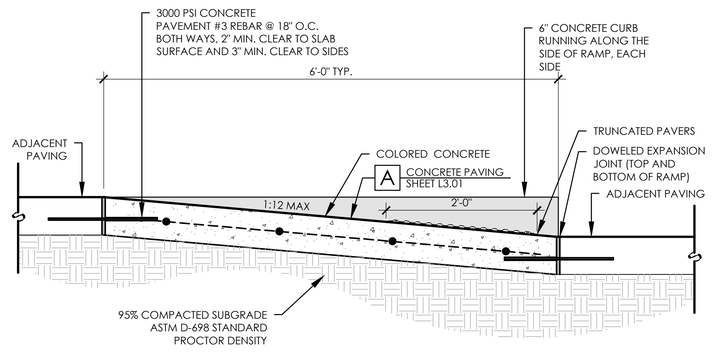

H ACCESSIBLE RAMP

SCALE: 1" = 1'-0"

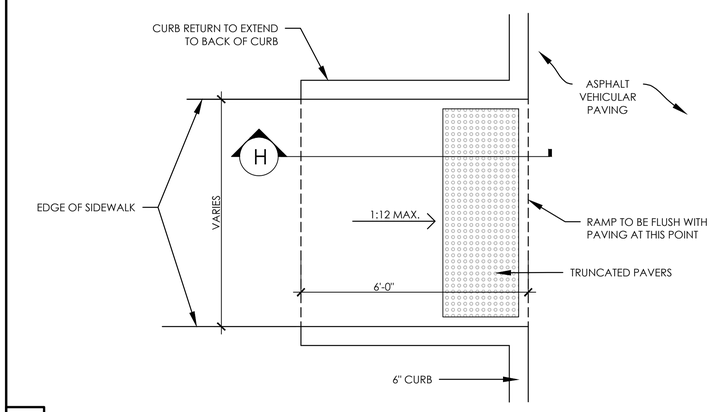

I ACCESS. RAMP W/CURB SIDES

SCALE: 1/2"=1'-0"

REVISIONS		
NO.	DATE	DESCRIPTION

DUNAWAY
118 Broadway • Suite 2016 • San Antonio, Texas 78205
Tel. 210.267.0246
TBPELS F-11149

muñoz
723 S. Flores • San Antonio, Texas 78204
210.349.1163 • www.munoz-co.com

SITE DETAILS

WORLD HERITAGE CENTER
SAN ANTONIO, TEXAS

PRELIMINARY
FOR REVIEW ONLY
These documents are for Design Review and not intended for Construction, Bidding or Permit Purposes. They were prepared by, or under the supervision of:
Bryan Kye Mask
L.A.# 2369

JOB NO.	5675.001
DESIGNED BY:	TLL
DRAWN BY:	EAH
CHECKED BY:	BKM
DATE:	12/01/2021
SHEET:	L3.02

FULL PATH: G:\Production\5000\5500\5675\01\PUD\Drawings\95% CD\Plot Sheets\Site Details\5675.001 Site Details
FILENAME: 5675.001-Site Details.dwg
PLOTTED BY: Dennis Kenner
PLOTTED ON: Thursday, December 02, 2021
PLOTTED AT: 2:51:18 PM
PLOTTED WITH: PMP Full.pc3

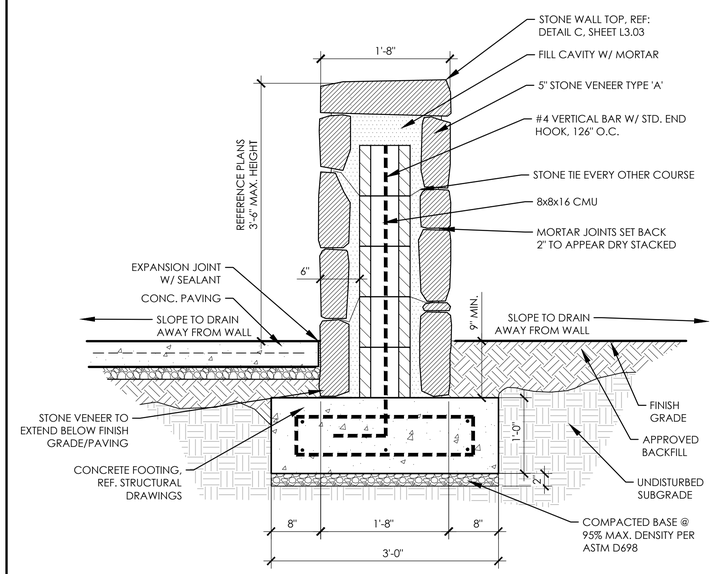

A **FREESTANDING STONE WALL TYPE 'A'** SCALE: 1" = 1'-0"

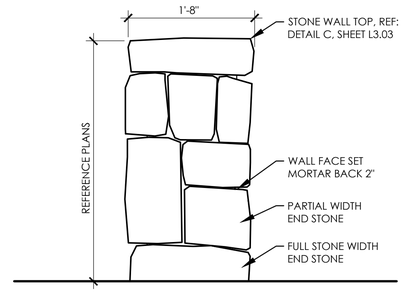

B **ELEVATION: STONE WALL END (TYP.)** SCALE: 1" = 1'-0"

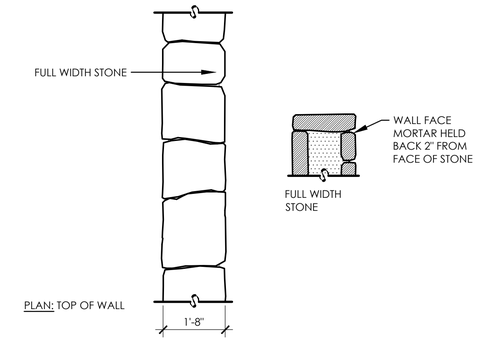

C **STONE WALL TOP** SCALE: 1/2" = 1'-0"

NOTE: CONTRACTOR TO PROVIDE MIN. 5' X 5' MOCK UP OF STONE VENEER AND STONE WALL TOP FOR REVIEW BY L.A.

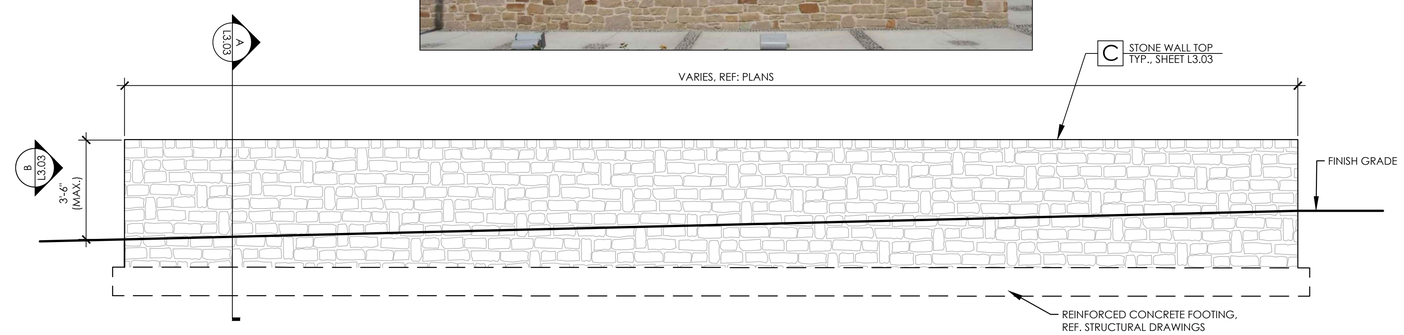

D **ELEVATION: STONE WALL TYPE 'A'** SCALE: 3/8" = 1'-0"

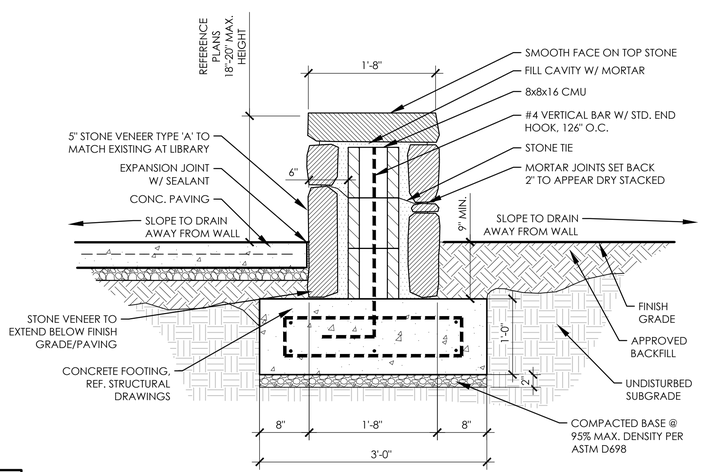

E **SEATWALL** SCALE: 1" = 1'-0"

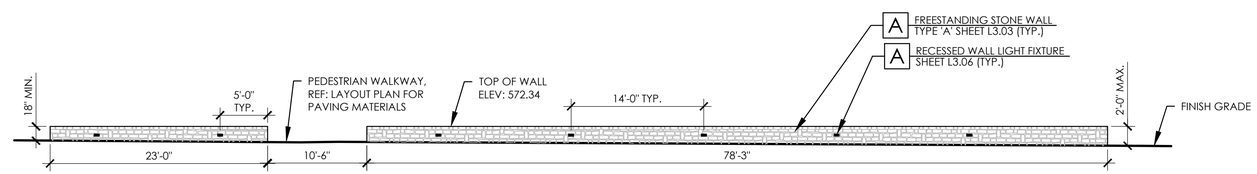

F **ELEVATION: LOW SEAT WALL** SCALE: 1/8" = 1'-0"

REVISIONS		
NO.	DATE	DESCRIPTION

SITE DETAILS

WORLD HERITAGE CENTER
SAN ANTONIO, TEXAS

DUNAWAY
118 Broadway • Suite 201 • San Antonio, Texas 78205
Tel. 210.267.0246
TBPELS F-11146

muñoz
723 S. Flores • San Antonio, Texas 78204
210.349.1163 • www.munoz-co.com

PRELIMINARY
FOR REVIEW ONLY
These documents are for Design Review and not intended for Construction, Bidding or Permit Purposes. They were prepared by, or under the supervision of:
Bryan Kye Mask
L.A.# 2369

JOB NO.	5675.001
DESIGNED BY:	TLL
DRAWN BY:	EAH
CHECKED BY:	BKM
DATE:	12/01/2021
SHEET:	L3.03

FILE PATH: G:\Production\4000\5600\5675\001\PLAN\Drawings\95%. CD\Plot Sheets\Site\5675.001-Site Details
FILENAME: 5675.001-Site Details.dwg
PLOTTED BY: Tamara Martinez
PLOTTED ON: Thursday, November 02, 2021
PLOTTED AT: 2:54:13 PM
PLOTTED WITH: DWG TO PDF.pc3

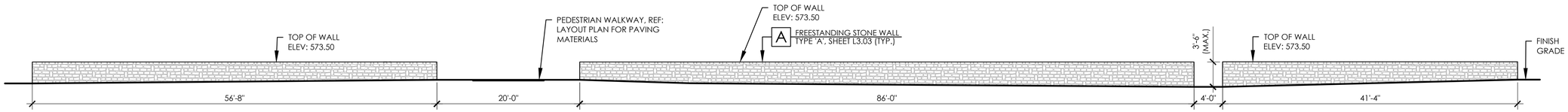

A STONE WALL ELEVATION

SCALE: 1/8" = 1'-0"

NOTES:
FINAL DESIGN FOR STONE ETCHING WILL BE SELECTED AND APPROVED BY CLIENT.

SAN ANTONIO MISSIONS
WORLD HERITAGE • OUR HERITAGE

STONE ETCHING DESIGN

NOTES:
CONTRACTOR TO PROVIDE NATURAL STONE AS FOLLOWS: LIMESTONE BLOCKS, MEDIUM DENSITY. DIMENSION SHALL BE 2'X2' WITH A MAXIMUM LENGTH OF 6'-0" AND MINIMUM LENGTH OF 3'-0". STONE COLOR SHALL BE "BUFF"; FRONT AND BACK OF STONE TO BE NATURAL FACE, TOP, END AND BOTTOM SURFACES SHALL BE SAWN.

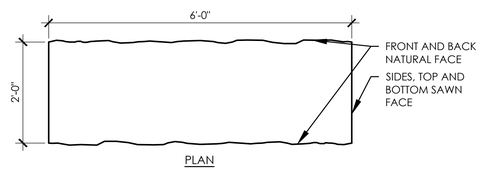

PLAN

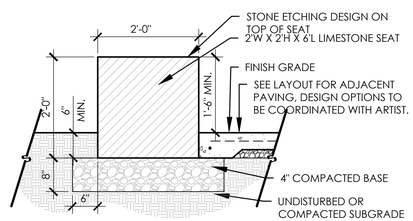

SECTION

B CUT STONE SEAT

SCALE: 3/4" = 1'-0"

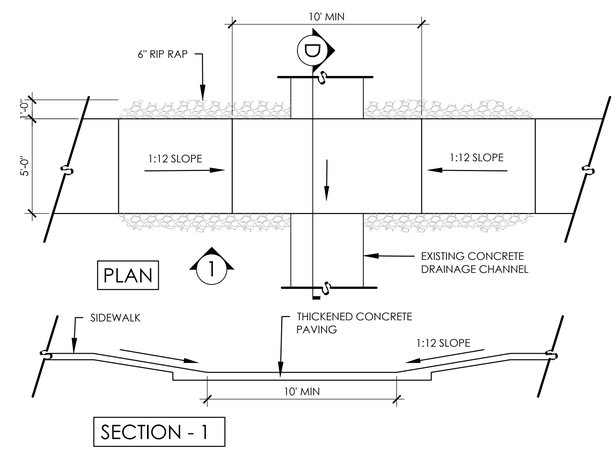

PLAN 1

SECTION - 1

C CONCRETE TRAIL PAVING

SCALE: 1/4" = 1'-0"

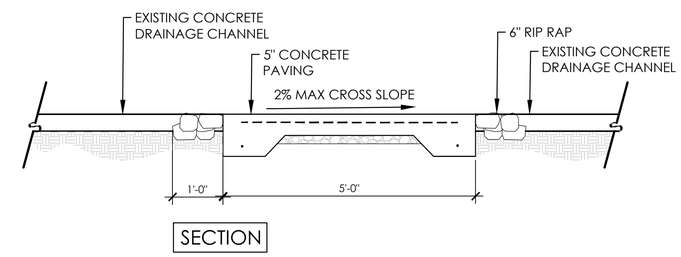

SECTION

D SECTION: CONCRETE TRAIL PAVING

SCALE: 3/4" = 1'-0"

NOTE: CONTRACTOR TO PROVIDE MIN. 5' X 5' MOCK UP OF STONE VENEER AND STONE WALL TOP FOR REVIEW BY L.A.

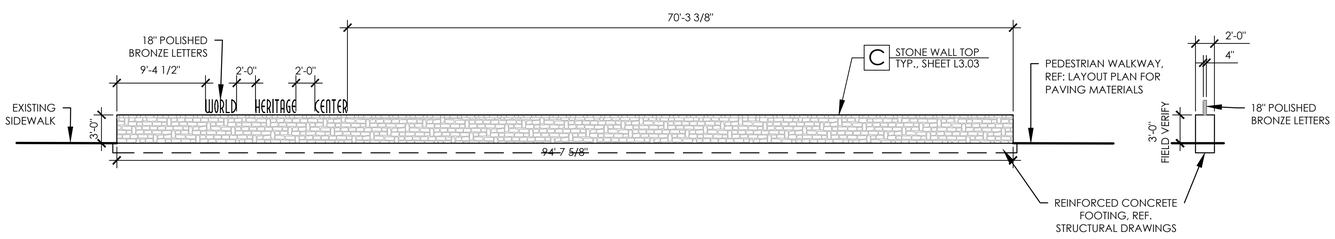

E ELEVATION: LOW SEAT WALL

SCALE: 1/8" = 1'-0"

NO.	DATE	DESCRIPTION

REVISIONS

DUNAWAY
118 Broadway • Suite 2016 • San Antonio, Texas 78205
Tel: 210.267.0246
TBPELS F-11146

muñoz
723 S. Flores • San Antonio, Texas 78204
210.349.1163 • www.munoz-co.com

SITE DETAILS

WORLD HERITAGE CENTER
SAN ANTONIO, TEXAS

PRELIMINARY
FOR REVIEW ONLY
These documents are for Design Review and not intended for Construction, Bidding or Permit Purposes. They were prepared by, or under the supervision of:
Bryan Kye Mask
L.A.# 2369

JOB NO.	5675.001
DESIGNED BY:	TLL
DRAWN BY:	EAH
CHECKED BY:	BKM
DATE:	12/01/2021
SHEET:	L3.04

FULL PATH: G:\Production\4000\5650\5675\001\PLA\Drawings\95% CD\Plot Sheets\5675.001 Site Details

FILENAME: 5675.001 Site Details.dwg
PLOTTED BY: Dennis Medina
PLOTTED ON: Thursday, December 02, 2021
PLOTTED AT: 2:57:15 PM
PLOTTED WITH: DWG To Pdf.pc3

A ELEVATION: STONE WALL @ BIOSWALE

SCALE: 1/8" = 1'-0"

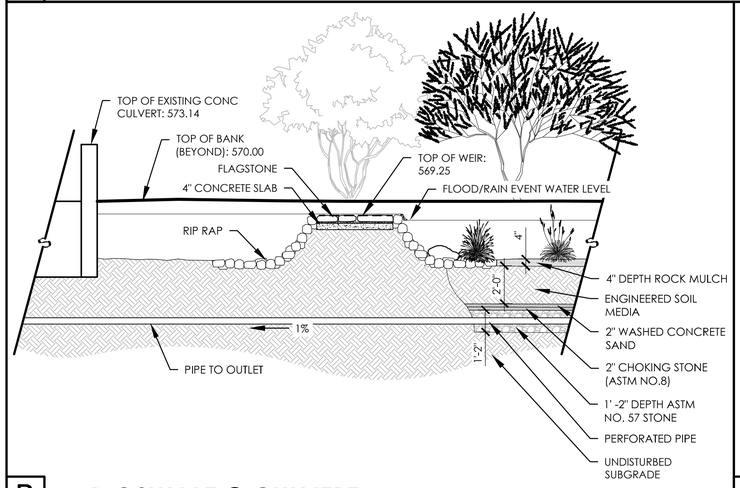

B BIOSWALE @ CULVERT

SCALE: 1/4" = 1'-0"

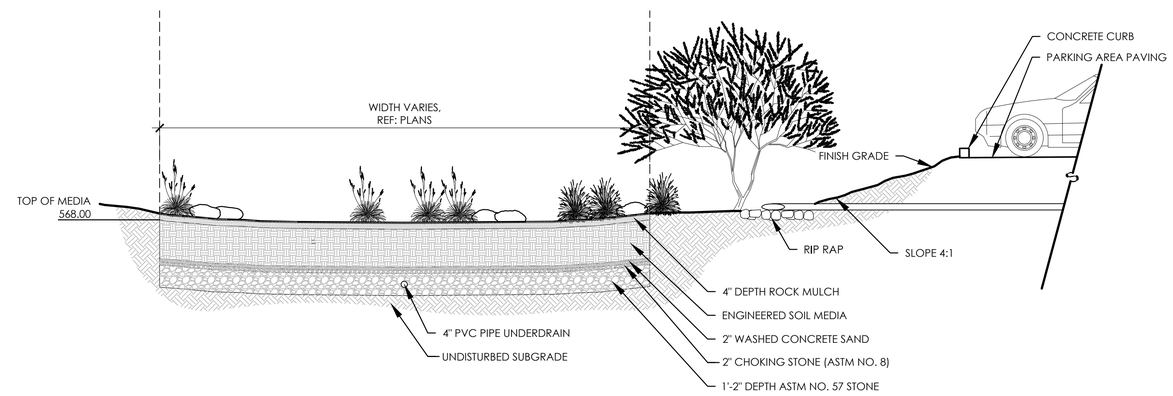

C BIOSWALE @ PARKING

SCALE: 1/4" = 1'-0"

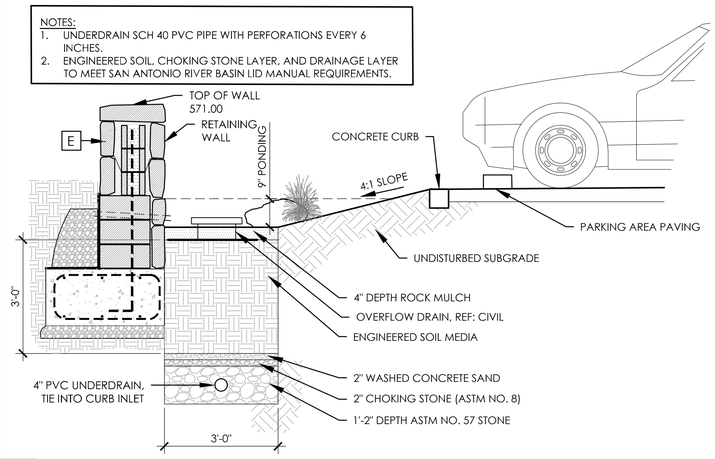

D BIOSWALE

SCALE: 1/2" = 1'-0"

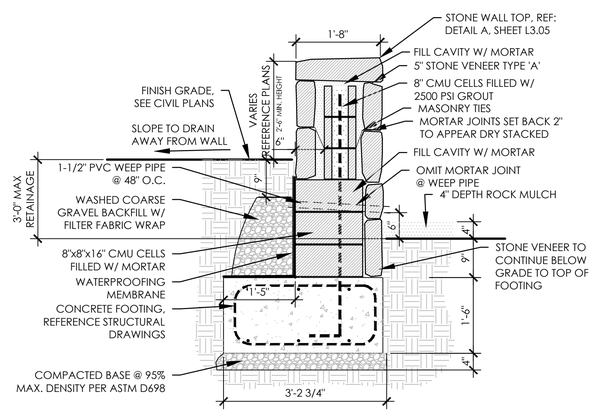

E SECTION: BIOSWALE RETAINING WALL

SCALE: 3/4" = 1'-0"

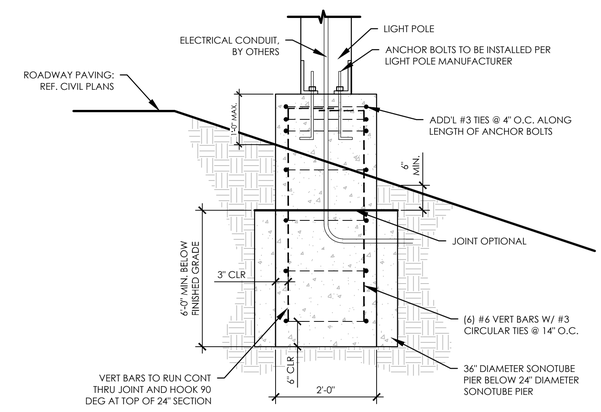

F LIGHT FIXTURE FOOTING AT SLOPE

SCALE: 3/4" = 1'-0"

REVISIONS		
NO.	DATE	DESCRIPTION

DUNAWAY
118 Broadway • Suite 2016 • San Antonio, Texas 78205
Tel: 210.267.0246
TBPELS F-11146

muñoz
723 S. Flores • San Antonio, Texas 78204
210.349.1163 • www.munoz-co.com

SITE DETAILS

WORLD HERITAGE CENTER
SAN ANTONIO, TEXAS

PRELIMINARY
FOR REVIEW ONLY
These documents are for Design Review and not intended for Construction, Bidding or Permit Purposes. They were prepared by, or under the supervision of:
Bryan Kye Mask
L.A.# 2369

JOB NO.	5675.001
DESIGNED BY:	TLL
DRAWN BY:	EAH
CHECKED BY:	BKM
DATE:	12/01/2021
SHEET:	L3.05

FULL PATH: G:\Production\4000\5650\5675\001\PLAT\Drawings\09% CD\Plot Sheets\(Production\4000\5650\5675\001\PLAT\Drawings\09% CD\Plot Sheets\5675.001-Site Details
FILENAME: 5675.001-Site Details.dwg
PLOTTED BY: Damaris Hernandez
LAST SAVED: Wednesday, December 02, 2021
PLOTTED ON: 12:58:07 PM
PLOTTED WITH: DWG To PDF.pc3

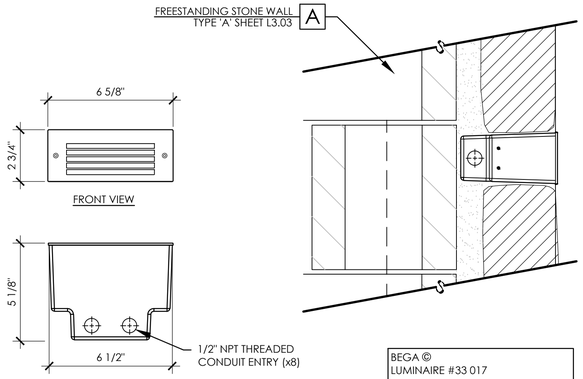

NOTE:
ALL FINISH TO BE BRONZE.

BEGA ©
LUMINAIRE #33 017

TO BE INSTALLED IN PEDESTAL PER
MANUFACTURER'S SPECIFICATIONS.

A RECESSED WALL LIGHT FIXTURE

SCALE: 3" = 1'-0"

NOTES:
1. LIGHT FIXTURE: BEGA LUMINAIRE #77 939
2. REFERENCE MANUFACTURER DETAILS AND SPECIFICATIONS FOR INSTALLATION.
3. CONTACT INFORMATION:
DENNIS GOLSCH
SPECTRUM LIGHTING
TEL: 210-930-7533
CELL:210-784-7670
EMAIL: DGOLSCH@SPECTRUMSA.COM

NOTE:
ALL FINISH TO BE BRONZE.

BEGA
1000 Bega Way
Carpinteria, Ca. 93013
(805) 684-0533

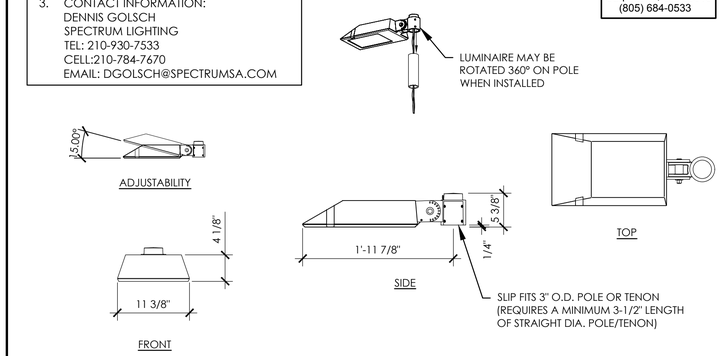

B LIGHT FIXTURE

SCALE: 1" = 1'-0"

NOTES:
1. LIGHT POLE: BEGA 1508HR ALUMINUM POLE
2. REFERENCE MANUFACTURER DETAILS AND SPECIFICATIONS FOR INSTALLATION.
3. CONTACT INFORMATION:
DENNIS GOLSCH
SPECTRUM LIGHTING
TEL: 210-930-7533
CELL:210-784-7670
EMAIL: DGOLSCH@SPECTRUMSA.COM

NOTE:
ALL FINISH TO BE BRONZE.

BEGA
1000 Bega Way
Carpinteria, Ca. 93013
(805) 684-0533

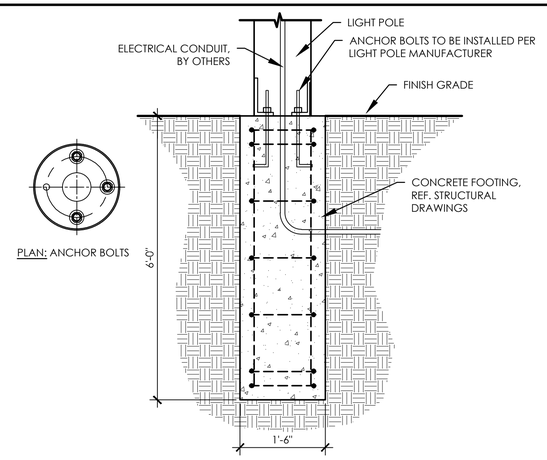

C LIGHT FIXTURE FOOTING

SCALE: 1"=1'-0"

BEGA ©
LUMINAIRE #84 605

TO BE INSTALLED IN GROUND PER
MANUFACTURER'S SPECIFICATIONS.

NOTE:
ALL FINISH TO BE BRONZE.

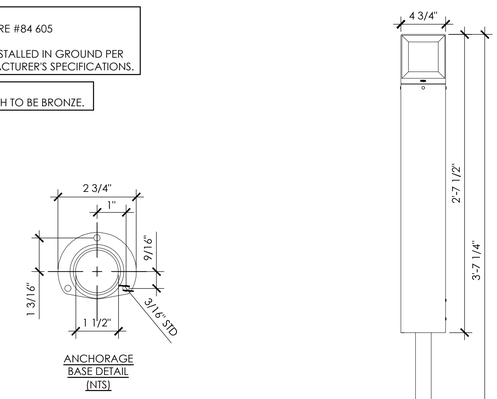

D GARDEN BOLLARD

SCALE: 1-1/2" = 1'-0"

NOTES:
1. LIGHT POLE: BEGA 1508HR ALUMINUM POLE
2. REFERENCE MANUFACTURER DETAILS AND SPECIFICATIONS FOR INSTALLATION.
3. CONTACT INFORMATION:
DENNIS GOLSCH
SPECTRUM LIGHTING
TEL: 210-930-7533
CELL:210-784-7670
EMAIL: DGOLSCH@SPECTRUMSA.COM

NOTE:
ALL FINISH TO BE BRONZE.

BEGA
1000 Bega Way
Carpinteria, Ca. 93013
(805) 684-0533

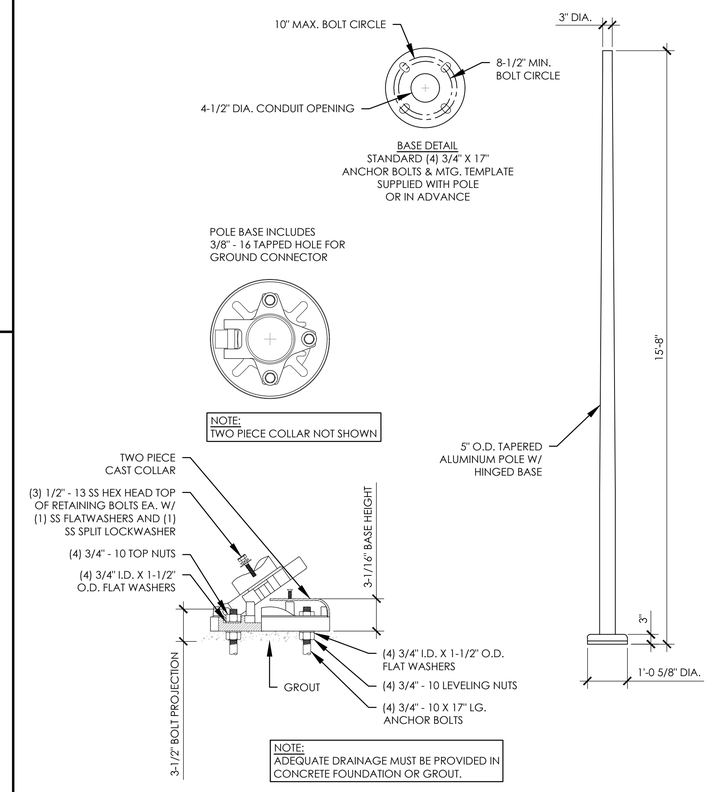

NOTE:
ADEQUATE DRAINAGE MUST BE PROVIDED IN
CONCRETE FOUNDATION OR GROUT.

E LIGHT POLE

SCALE: NTS

BEGA LUMINAIRE #77-017
FLUSH MOUNT IN-GRADE LUMINAIRE

REF: MANUFACTURER DETAILS & SPECS FOR INSTALLATION.
FINAL LOCATION AND QUANTITY OF LIGHTS TO BE APPROVED
BY OWNER PRIOR TO INSTALL.

CONTACT INFORMATION:
DENNIS GOLSCH AT SPECTRUM LIGHTING
TEL: 210-930-7533
EMAIL: DGOLSCH@SPECTRUMSA.COM

NOTE:
ALL FINISH TO BE BRONZE.

EXAMPLE LIGHT IMAGE

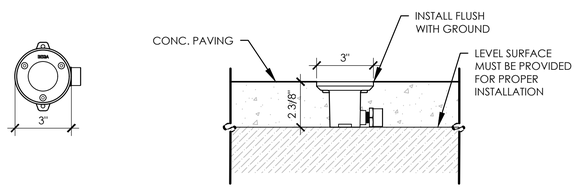

F IN-GRADE LIGHT

SCALE: 3" = 1'-0"

LIGHTING SCHEDULE

SYMBOL	QTY	MANUFACTURER	SPECIFICATION	DESCRIPTION	INSTALLATION	CONTROLS
A	5	Bega	33 017-2.0W LED-3000K-80 CRI	Recessed LED wall luminaire. Bronze.	Install per manufacturer's instructions.	Install with Photoelectric cell. See Specs for further information.
B	6	Bega	77 939-23.6W LED-3000K - 80 CRI	Pole top luminaire with asymmetric flat beam. Bronze.	Install per manufacturer's instructions.	
C	12	Bega	84 605-2.9W LED-3000K-80 CRI	LED garden and pathway bollard - unshielded - direct burial anchorage. Bronze.	Install per manufacturer's instructions.	
D	2	Bega	77 017-1.2W LED-3000K-80 CRI	Small scale in-grade luminaires stainless steel for LEDs. Bronze.	Install per manufacturer's instructions.	

NOTE: CONTACT DENNIS GOLSCH AT SPECTRUM LIGHTING FOR ORDERING INFORMATION. CELL: 210-784-7670/TEL: 210-930-7533/EMAIL: DGOLSCH@SPECTRUMSA.COM

NO.	DATE	DESCRIPTION

REVISIONS

DUNAWAY
118 Broadway • Suite 201 • San Antonio, Texas 78205
Tel. 210.267.0246
TX REG. F-11149

muñoz
723 S. Flores • San Antonio, Texas 78204
210.349.1163 • www.munoz-co.com

LIGHTING DETAILS & SCHEDULE

WORLD HERITAGE CENTER
SAN ANTONIO, TEXAS

PRELIMINARY
FOR REVIEW ONLY
These documents are for Design Review and not intended for Construction, Bidding or Permit Purposes. They were prepared by, or under the supervision of:
Bryan Kye Mask
L.A.# 2369

JOB NO.	5675.001
DESIGNED BY:	TLL
DRAWN BY:	EAH
CHECKED BY:	BKM
DATE:	12/01/2021
SHEET:	L3.06

FULL PATH: G:\Production\5000\5600\5675\001\PA\Drawings\95% CD\Plot Sheets\Site\5675.001-Site Details

FILENAME: 5675.001-Site Details.dwg
PLOTTED BY: Dennis Medina
PLOTTING SCALE: 1=1 Device
PLOTTED AT: December 01, 2021 2:06:47 PM
PLOTTER NAME: DWG To PDF.pc3

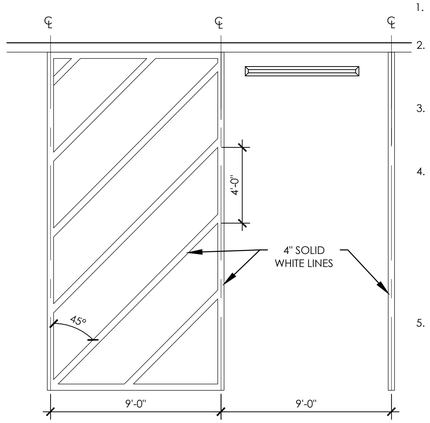

NOTES:

1. ALL PARKING SPACE LIMIT LINES SHALL BE 4" SOLID WHITE LINES.
2. AISLE MARKINGS SHOWN ARE EXAMPLES ONLY. OTHER METHODS TO INDICATE A NO PARKING AREA ARE ACCEPTABLE. AISLE MARKINGS SHALL BE WHITE.
3. DIMENSIONS OF LIMIT LINES, AISLE MARKINGS, AND SYMBOL (WITH OR WITHOUT BACKGROUND) MAY VARY + 10%.
4. PAVEMENT MARKING SYMBOLS (WITH BACKGROUND):
   A. ARE REQUIRED UNLESS STATED ELSEWHERE IN THE PLANS,
   B. SHOULD BE PLACED TOWARD THE FAR END OF THE PARKING SPACES SO AS TO BE VISIBLE TO MOTORISTS IN THE TRAVEL LANE,
   C. MAY BE PAINTED OR PREFABRICATED MATERIAL, AND
   D. SHALL BE 30"x30" MINIMUM.
5. ALL SLOPE IN AND AROUND EXPECTED WHEEL CHAIR PATH SHALL NOT EXCEED 2% CROSS-SLOPES.

A PARKING LOT STRIPING

SCALE: 1/4"=1'-0"

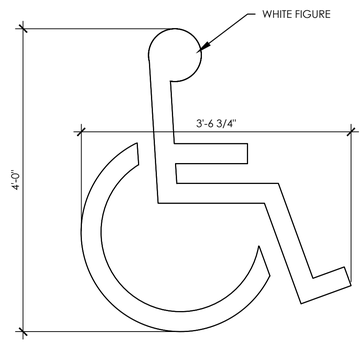

NOTE: SEE CALIFORNIA ACCESSIBILITY STANDARDS, TITLE 24 C.A.C., FOR ADDITIONAL REQUIREMENTS.

B HANDICAP SYMBOL

N.T.S.

NOTE:
1. REFERENCE LAYOUT PLAN FOR SIGN LOCATION.
2. SIGN TO MATCH EXISTING.
3. ALUMINUM PLAQUE ON TS 2"X12" 3/16" STL. TUBE H.D. GALV. AFTER FAB. FILLED W/ CONC. MOUNT BOTTOM OF SIGN A MINIMUM OF 60" ABOVE PAVEMENT. TUBE TO EXTEND 3FT/ BELOW PAVEMENT W/12" DIA. CONCRETE (3000 PSI) FOOTING TO TOP OF PAVEMENT.
4. PROVIDE ONE SIGN PER H/C SPACE, TYP.

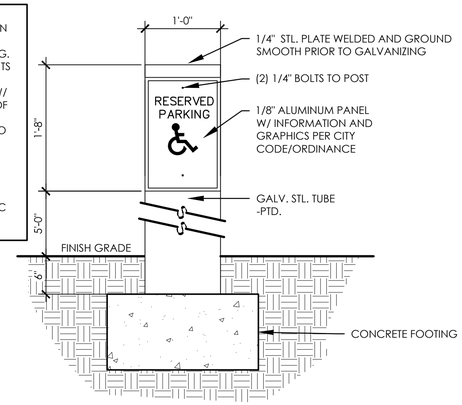

C HANDICAP PARKING SIGN

SCALE: 1"=1'-0"

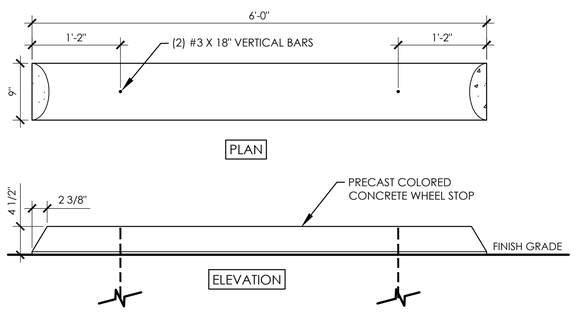

D WHEEL STOP

SCALE: 1"=1'-0"

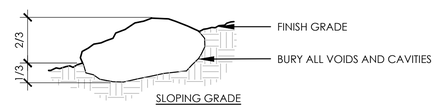

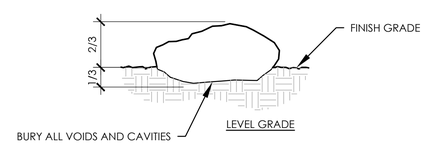

NOTES:
1) BOULDER SIZES:
S- 2'L X 3'W X 2'D (MIN)
M- 4'L X 3'W X 2'D (MIN)
L- 5'L X 4'W X 3'D (MAX)

2) BOULDER SIZE & PLACEMENT SHALL BE VERIFIED BY L.A. PRIOR TO BACKFILLING

3) ALL BOULDERS ARE "SAN SABA" STONE

E LANDSCAPE BOULDER DETAIL

SCALE: 1" = 1'-0"

REVISIONS		
NO.	DATE	DESCRIPTION

DUNAWAY
118 Broadway • Suite 2016 • San Antonio, Texas 78205
Tel. 210.267.0246
TBPELS F-11146

muñoz
723 S. Flores • San Antonio, Texas 78204
210.349.1163 • www.munoz-co.com

SITE DETAILS

WORLD HERITAGE CENTER
SAN ANTONIO, TEXAS

PRELIMINARY
FOR REVIEW ONLY
These documents are for Design Review and not intended for Construction, Bidding or Permit Purposes. They were prepared by, or under the supervision of:
Bryan Kye Mask
L.A.# 2369

JOB NO.	5675.001
DESIGNED BY:	TLL
DRAWN BY:	EAH
CHECKED BY:	BKM
DATE:	12/01/2021
SHEET:	L3.07

FILE PATH: G:\Production\4000\5600\5675\001\PLAD\Drawings\95% CD\Plot Sheets\Production\4000\5600\5675\001\PLAD\Drawings\95% CD\Plot Sheets\5675.001-Site Details

FILENAME: 5675.001-Site Details.dwg
PLOTTED BY: Tamara Hartman
PLOTTED ON: Thursday, November 02, 2021
PLOTTED AT: 1:01:22 PM
PLOTTED WITH: DWG TO PDF.pc3

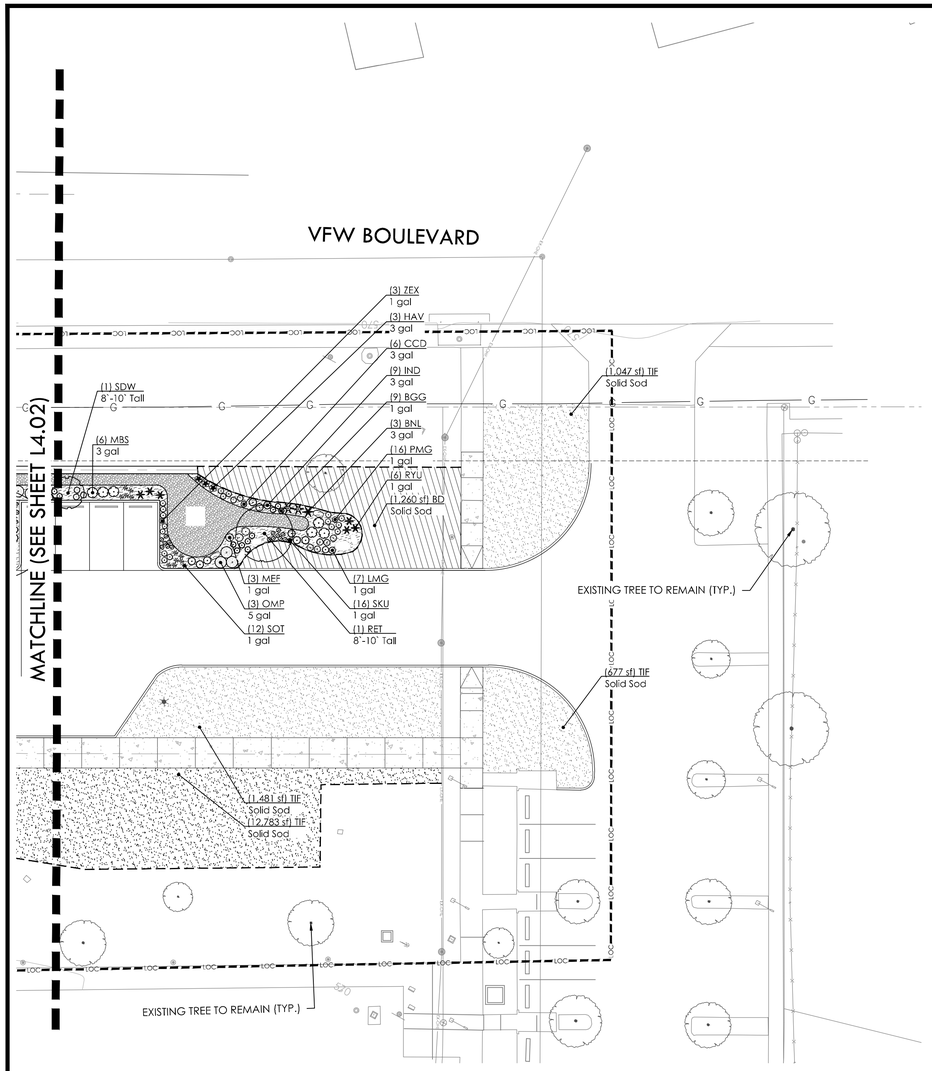

PLANT SCHEDULE

TREES	CODE	COMMON NAME	BOTANICAL NAME
	MTL	TEXAS MOUNTAIN LAUREL	SOPHORA SECUNDIFLORA
	PER	TEXAS PERSIMMON	DIOSPYROS TEXANA
ORNAMENTAL TREES	**CODE**	**COMMON NAME**	**BOTANICAL NAME**
	POH	'PRIDE OF HOUSTON' YAUPON HOLLY	ILEX VOMITORIA 'PRIDE OF HOUSTON'
	SDW	ART'S SEEDLESS DESERT WILLOW	CHILOPSIS LINEARIS 'ART'S SEEDLESS'
	BDW	BUBBA DESERT WILLOW	CHILOPSIS LINEARIS 'BUBBA'
	LDW	LUCRETIA HAMILTON DESERT WILLOW	CHILOPSIS LINEARIS 'LUCRETIA HAMILTON' TM
	RET	RETAMA	PARKINSONIA ACULEATA
	DCI	SEEDLESS DESERT WILLOW	CHILOPSIS LINEARIS ART'S SEEDLESS
SHADE TREES	**CODE**	**COMMON NAME**	**BOTANICAL NAME**
	ELM	CEDAR ELM	ULMUS CRASSIFOLIA
	OAK	LIVE OAK	QUERCUS VIRGINIANA
	MSY	MEXICAN SYCAMORE	PLATANUS MEXICANA
SHRUBS	**CODE**	**COMMON NAME**	**BOTANICAL NAME**
	DWX	DWARF SOUTHERN WAX MYRTLE	MYRICA PUSILLA
	FCB	FIRECRACKER PLANT	RUSSELIA EQUISETIFORMIS
	GCO	GRAY COTONEASTER	COTONEASTER HORIZONTALIS
	MCS	MEALY CUP SAGE	SALVIA FARINACEA 'TEXAS VIOLET' TM
	MEF	MEXICAN FLAME	ANISACANTHUS QUADRIFIDUS
	RBS	RIO BRAVO SAGE	LEUCOPHYLLUM LANGMANIAE 'RIO BRAVO' TM
	SCS	SCARLET SAGE	SALVIA GREGGII
GRASSES	**CODE**	**COMMON NAME**	**BOTANICAL NAME**
	BGG	BLUE GRAMA GRASS 'BLONDE AMBITION'	BOUTELOUA GRACILIS 'BLONDE AMBITION'
	DRG	DEER GRASS	MUHLENBERGIA RIGENS
	GMG	GULF COAST MUHLY	MUHLENBERGIA CAPILLARIS 'GULF COAST'
	LMG	LINDHEIMER'S MUHLY	MUHLENBERGIA LINDHEIMERI
	MFG	MEXICAN FEATHER GRASS	STIPA TENACISSIMA
	PMG	PINE MUHLY	MUHLENBERGIA DUBIA
	PFG	PINK FLAMINGO MUHLY GRASS	MUHLENBERGIA CAPILLARIS 'PINK FLAMINGOS'
	SMG	SEEP MUHLY	MUHLENBERGIA REVERCHONI
ANNUALS/PERENNIALS	**CODE**	**COMMON NAME**	**BOTANICAL NAME**
	BDA	BLACKFOOT DAISY	MELAMPODIUM LEUCANTHUM
	BMF	BLUE MIST FLOWER	CONOCLINIUM COELESTINUM
	PLU	BLUE PLUMBAGO	PLUMBAGO AURICULATA
	BLB	BULBINE	BULBINE FRUTESCENS
	BUI	BUTTERFLY/MOREA IRIS	DIETES IRIDIOIDES
	CCD	COPPER CANYON DAISY	TAGETES LEMMONII
	DAM	DAMIANITA	CHRYSACTINIA MEXICANA
	AGD	DWARF LILY OF THE NILE	AGAPANTHUS AFRICANUS MINOR 'DWARF BLUE'
	FAS	FRIKARTI ASTER	ASTER X FRIKARTII
	IND	INDIGO SPIREA SALVIA	SALVIA X 'INDIGO SPIRES'
	AGA	LILY OF THE NILE	AGAPANTHUS AFRICANUS
	MBS	MEXICAN BUSH SAGE	SALVIA LEUCANTHA
	ROR	RED DRIFT ROSE	ROSA X 'MEIGALPIO'
	SKU	SKULLCAP	SCUTELLARIA SUFFRUTESCENS
	GAR	SOCIETY GARLIC	TULBAGHIA VIOLACEA
	COL	TEXAS GOLD COLUMBINE	AQUILEGIA CHRYSANTHA 'HINKLEYANA'
	TXL	TEXAS LANTANA	LANTANA URTICOIDES
	ROS	UPRIGHT ROSEMARY	ROSMARINUS OFFICINALIS 'TUSCAN BLUE'
	YLB	YELLOWBELLS	TECOMA STANS
	ZEX	ZEXMENIA	WEDELIA TEXANA
SUCCULENTS	**CODE**	**COMMON NAME**	**BOTANICAL NAME**
	BNL	BLUE NOLINA	NOLINA NELSONII 'BLUE NOLINA'
	RYU	DESERT DUSK RED YUCCA	HESPERALOE PARVIFLORA 'MSWNPERMA'
	HAV	HAVARD'S CENTURY PLANT	AGAVE HAVARDIANA
	OMP	OLD MEXICO PRICKLYPEAR	OPUNTIA GOMEI 'OLD MEXICO'
	PRP	PURPLE PRICKLYPEAR	OPUNTIA SANTA-RITA
	SOT	TEXAS SOTOL	DASYLIRION TEXANUM

GROUND COVERS	CODE	COMMON NAME	BOTANICAL NAME
	MUL	BARK MULCH	
	TIF	BERMUDA GRASS	CYNODON DACTYLON 'TIF 419'
	BD	BUFFALO GRASS	BOUTELOUA DACTYLOIDES

NORTH

GRAPHIC SCALE
0 20 40
1 inch = 20'

REVISIONS

NO.	DATE	DESCRIPTION

DUNAWAY
118 Broadway • Suite 204 • San Antonio, Texas 78205
Tel: 210.267.5246
TBPELS: F-11149

muñoz
723 S. Flores • San Antonio, Texas 78204
210.349.1163 • www.munoz-co.com

PLANTING PLAN

WORLD HERITAGE CENTER
SAN ANTONIO, TEXAS

PRELIMINARY
FOR REVIEW ONLY
These documents are for Design Review and not intended for Construction, Bidding or Permit Purposes. They were prepared by, or under the supervision of:
Bryan Kye Mask
L.A.# 2369

JOB NO.	5675.001
DESIGNED BY:	TLL
DRAWN BY:	MRS
CHECKED BY:	TLL
DATE:	12/01/2021
SHEET:	L4.01

FULL PATH: G:\Production\5000\05600\56\70\001\PLA\Drawings\95% CD\Plot Sheets\J\Production\5000\05600\56\70\001\PLA\Drawings\95% CD\Plot Sheets\5675.001-Planting Plan

FILENAME: 5675.001-Planting Plan-Dwg
PLOTTED BY: Damaris Raptosa
LAST SAVED BY: Damaris Raptosa
PLOTTED ON: Thursday, December 02, 2021
PLOTTED AT: 3:27:01 PM
PLOTTED WITH: TLGM-PC-PMP.pc3

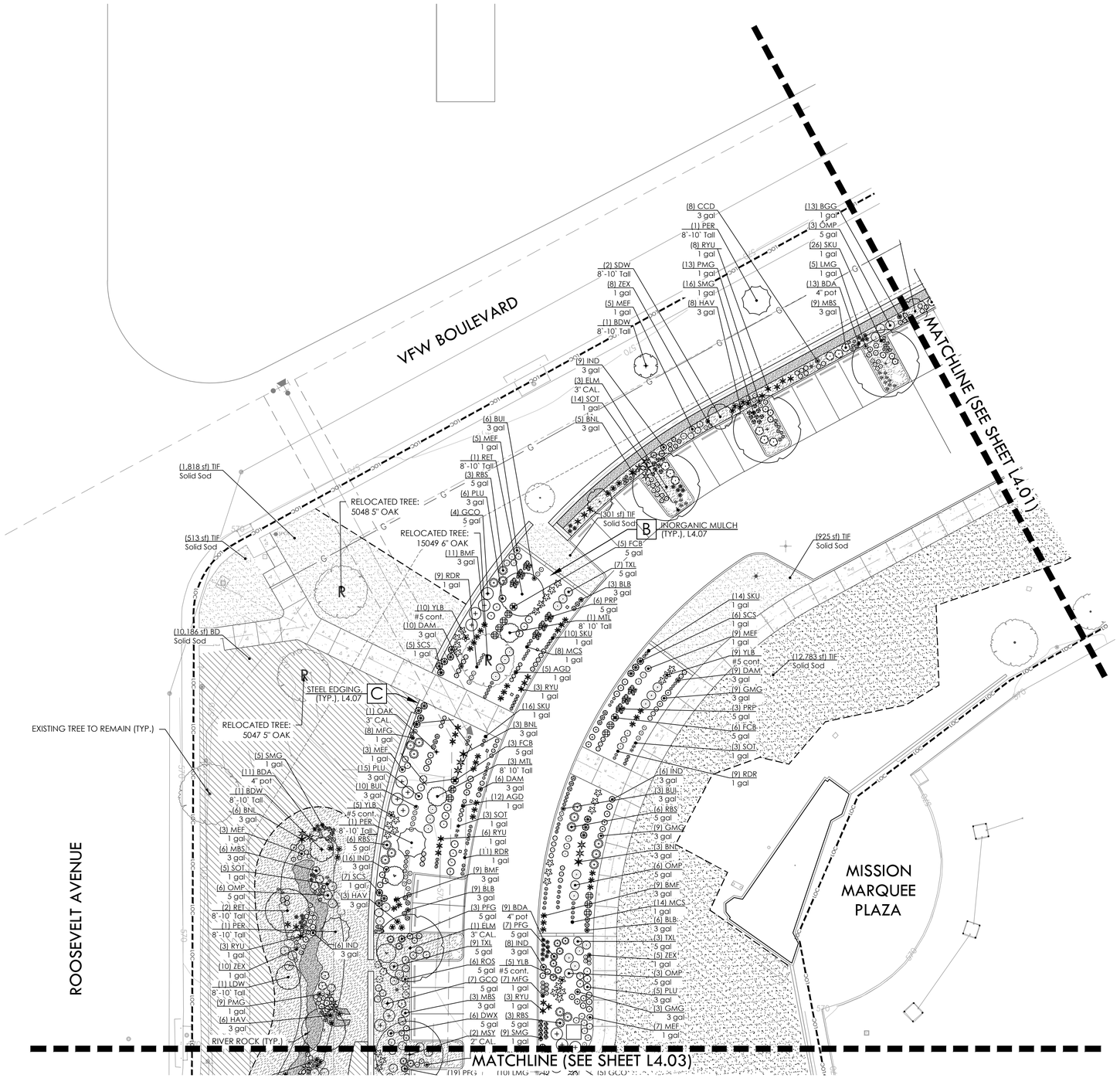

PLANT SCHEDULE

TREES	CODE	COMMON NAME	BOTANICAL NAME
	MTL	TEXAS MOUNTAIN LAUREL	SOPHORA SECUNDIFLORA
	PER	TEXAS PERSIMMON	DIOSPYROS TEXANA

ORNAMENTAL TREES	CODE	COMMON NAME	BOTANICAL NAME
	POH	'PRIDE OF HOUSTON' YAUPON HOLLY	ILEX VOMITORIA 'PRIDE OF HOUSTON'
	SDW	ART'S SEEDLESS DESERT WILLOW	CHILOPSIS LINEARIS 'ART'S SEEDLESS'
	BDW	BUBBA DESERT WILLOW	CHILOPSIS LINEARIS 'BUBBA'
	LDW	LUCRETIA HAMILTON DESERT WILLOW	CHILOPSIS LINEARIS 'LUCRETIA HAMILTON' TM
	RET	RETAMA	PARKINSONIA ACULEATA
	DCI	SEEDLESS DESERT WILLOW	CHILOPSIS LINEARIS ART'S SEEDLESS

SHADE TREES	CODE	COMMON NAME	BOTANICAL NAME
	ELM	CEDAR ELM	ULMUS CRASSIFOLIA
	OAK	LIVE OAK	QUERCUS VIRGINIANA
	MSY	MEXICAN SYCAMORE	PLATANUS MEXICANA

SHRUBS	CODE	COMMON NAME	BOTANICAL NAME
	DWX	DWARF SOUTHERN WAX MYRTLE	MYRICA PUSILLA
	FCB	FIRECRACKER PLANT	RUSSELIA EQUISETIFORMIS
	GCO	GRAY COTONEASTER	COTONEASTER HORIZONTALIS
	MCS	MEALY CUP SAGE	SALVIA FARINACEA 'TEXAS VIOLET' TM
	MEF	MEXICAN FLAME	ANISACANTHUS QUADRIFIDUS
	RBS	RIO BRAVO SAGE	LEUCOPHYLLUM LANGMANIAE 'RIO BRAVO' TM
	SCS	SCARLET SAGE	SALVIA GREGGII

GRASSES	CODE	COMMON NAME	BOTANICAL NAME
	BGG	BLUE GRAMA GRASS 'BLONDE AMBITION'	BOUTELOUA GRACILIS 'BLONDE AMBITION'
	DRG	DEER GRASS	MUHLENBERGIA RIGENS
	GMG	GULF COAST MUHLY	MUHLENBERGIA CAPILLARIS 'GULF COAST'
	LMG	LINDHEIMER'S MUHLY	MUHLENBERGIA LINDHEIMERI
	MFG	MEXICAN FEATHER GRASS	STIPA TENACISSIMA
	PMG	PINE MUHLY	MUHLENBERGIA DUBIA
	PFG	PINK FLAMINGO MUHLY GRASS	MUHLENBERGIA CAPILLARIS 'PINK FLAMINGOS'
	SMG	SEEP MUHLY	MUHLENBERGIA REVERCHONII

ANNUALS/PERENNIALS	CODE	COMMON NAME	BOTANICAL NAME
	BDA	BLACKFOOT DAISY	MELAMPODIUM LEUCANTHUM
	BMF	BLUE MIST FLOWER	CONOCLINIUM COELESTINUM
	PLU	BLUE PLUMBAGO	PLUMBAGO AURICULATA
	BLB	BULBINE	BULBINE FRUTESCENS
	BUI	BUTTERFLY/MOREA IRIS	DIETES IRIDIOIDES
	CCD	COPPER CANYON DAISY	TAGETES LEMMONII
	DAM	DAMIANITA	CHRYSACTINIA MEXICANA
	AGD	DWARF LILY OF THE NILE	AGAPANTHUS AFRICANUS MINOR 'DWARF BLUE'
	FAS	FRIKARTI ASTER	ASTER X FRIKARTII
	IND	INDIGO SPIREA SALVIA	SALVIA X 'INDIGO SPIRES'
	AGA	LILY OF THE NILE	AGAPANTHUS AFRICANUS
	MBS	MEXICAN BUSH SAGE	SALVIA LEUCANTHA
	RDR	RED DRIFT ROSE	ROSA X 'MEIGALPIO'
	SKU	SKULLCAP	SCUTELLARIA SUFFRUTESCENS
	GAR	SOCIETY GARLIC	TULBAGHIA VIOLACEA
	COL	TEXAS GOLD COLUMBINE	AQUILEGIA CHRYSANTHA 'HINKLEYANA'
	TXL	TEXAS LANTANA	LANTANA URTICOIDES
	ROS	UPRIGHT ROSEMARY	ROSMARINUS OFFICINALIS 'TUSCAN BLUE'
	YLB	YELLOWBELLS	TECOMA STANS
	ZEX	ZEXMENIA	WEDELIA TEXANA

SUCCULENTS	CODE	COMMON NAME	BOTANICAL NAME
	BNL	BLUE NOLINA	NOLINA NELSONI 'BLUE NOLINA'
	RYU	DESERT DUSK RED YUCCA	HESPERALOE PARVIFLORA 'MSWNPERMA'
	HAV	HAVARD'S CENTURY PLANT	AGAVE HAVARDIANA
	OMP	OLD MEXICO PRICKLYPEAR	OPUNTIA GOMEI 'OLD MEXICO'
	PRP	PURPLE PRICKLYPEAR	OPUNTIA SANTA-RITA
	SOT	TEXAS SOTOL	DASYLIRION TEXANUM

GROUND COVERS	CODE	COMMON NAME	BOTANICAL NAME
	MUL	BARK MULCH	
	TIF	BERMUDA GRASS	CYNODON DACTYLON 'TIF 419'
	BD	BUFFALO GRASS	BOUTELOUA DACTYLOIDES

NORTH

GRAPHIC SCALE
0 20 40
1 inch = 20'

REVISIONS

NO.	DATE	DESCRIPTION

DUNAWAY
118 Broadway • Suite 204 • San Antonio, Texas 78205
Tel: 210.267.5246
TBAE REG. F-11142

muñoz
723 S. Flores • San Antonio, Texas 78204
210.349.1163 • www.munoz-co.com

PLANTING PLAN

WORLD HERITAGE CENTER
SAN ANTONIO, TEXAS

PRELIMINARY
FOR REVIEW ONLY
These documents are for Design Review and not intended for Construction, Bidding or Permit Purposes. They were prepared by, or under the supervision of:
Bryan Kye Mask
L.A.# 2369

JOB NO.	5675.001
DESIGNED BY:	TLL
DRAWN BY:	MRS
CHECKED BY:	BKM
DATE:	12/01/2021
SHEET:	L4.02

FILL PATH: G:\Production\5000\5065\5675\001\PLA\Drawings\95% CD\Plot Sheets\5675.001 PLA Drawings\95% CD\Plot Sheets\5675.001-Planting Plan

FILENAME: 5675.001-Planting Plan.dwg
PLOTTED BY: Damaris Martinez
LAST SAVED: December 02, 2021
PLOTTED ON: December 02, 2021
PLOTTED AT: 3:35:56 PM
PLOTTER NAME: 1000D to PDF.pc3

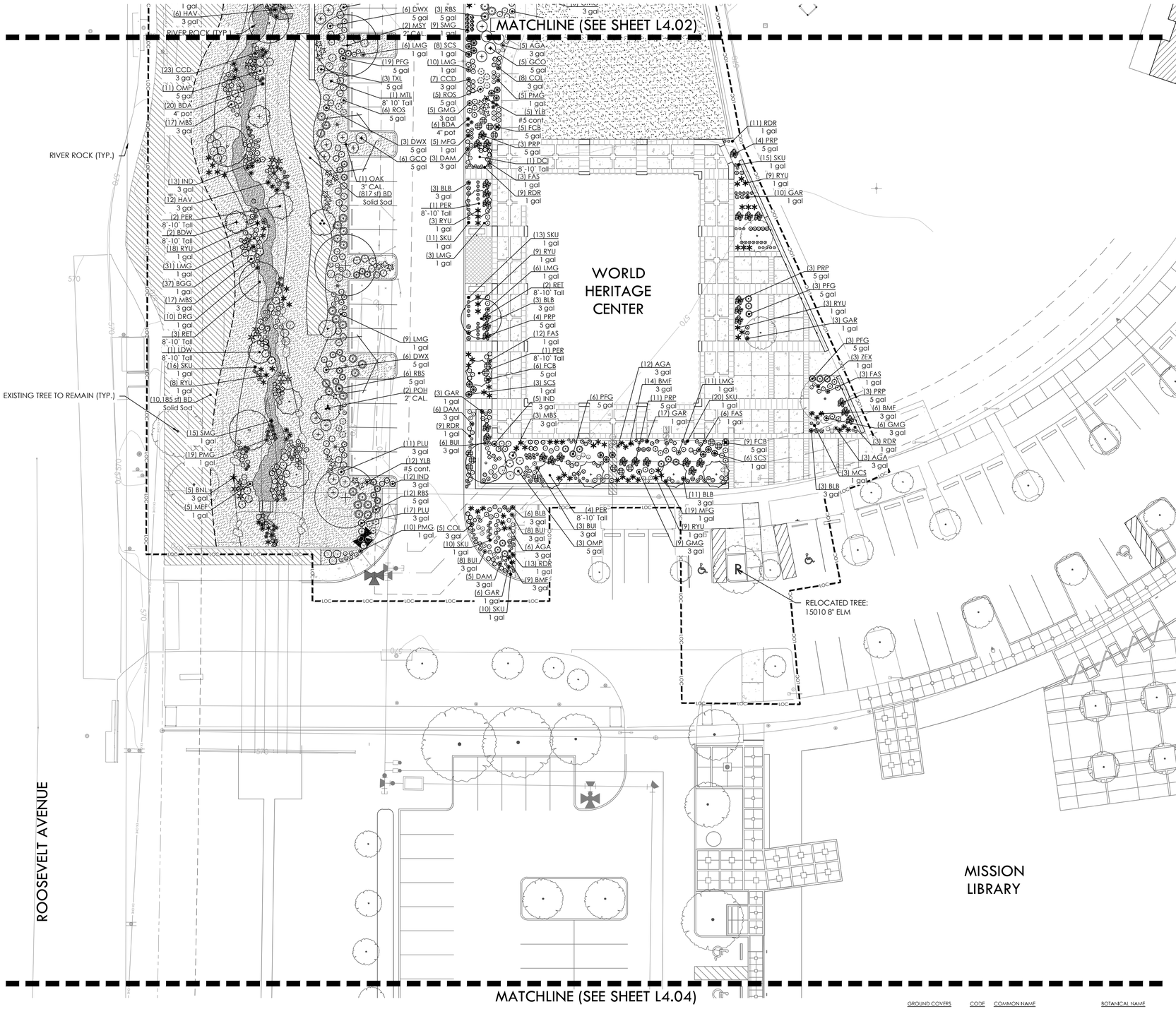

PLANT SCHEDULE

TREES	CODE	COMMON NAME	BOTANICAL NAME
	MTL	TEXAS MOUNTAIN LAUREL	SOPHORA SECUNDIFLORA
	PER	TEXAS PERSIMMON	DIOSPYROS TEXANA

ORNAMENTAL TREES	CODE	COMMON NAME	BOTANICAL NAME
	POH	'PRIDE OF HOUSTON' YAUPON HOLLY	ILEX VOMITORIA 'PRIDE OF HOUSTON'
	SDW	ART'S SEEDLESS DESERT WILLOW	CHILOPSIS LINEARIS 'ART'S SEEDLESS'
	BDW	BUBBA DESERT WILLOW	CHILOPSIS LINEARIS 'BUBBA'
	LDW	LUCRETIA HAMILTON DESERT WILLOW	CHILOPSIS LINEARIS 'LUCRETIA HAMILTON' TM
	RET	RETAMA	PARKINSONIA ACULEATA
	DCI	SEEDLESS DESERT WILLOW	CHILOPSIS LINEARIS ART'S SEEDLESS

SHADE TREES	CODE	COMMON NAME	BOTANICAL NAME
	ELM	CEDAR ELM	ULMUS CRASSIFOLIA
	OAK	LIVE OAK	QUERCUS VIRGINIANA
	MSY	MEXICAN SYCAMORE	PLATANUS MEXICANA

SHRUBS	CODE	COMMON NAME	BOTANICAL NAME
	DWX	DWARF SOUTHERN WAX MYRTLE	MYRICA PUSILLA
	FCB	FIRECRACKER PLANT	RUSSELIA EQUISETIFORMIS
	GCO	GRAY COTONEASTER	COTONEASTER HORIZONTALIS
	MCS	MEALY CUP SAGE	SALVIA FARINACEA 'TEXAS VIOLET' TM
	MEF	MEXICAN FLAME	ANISACANTHUS QUADRIFIDUS
	RBS	RIO BRAVO SAGE	LEUCOPHYLLUM LANGMANIAE 'RIO BRAVO' TM
	SCS	SCARLET SAGE	SALVIA GREGGII

GRASSES	CODE	COMMON NAME	BOTANICAL NAME
	BGG	BLUE GRAMA GRASS 'BLONDE AMBITION'	BOUTELOUA GRACILIS 'BLONDE AMBITION'
	DRG	DEER GRASS	MUHLENBERGIA RIGENS
	GMG	GULF COAST MUHLY	MUHLENBERGIA CAPILLARIS 'GULF COAST'
	LMG	LINDHEIMER'S MUHLY	MUHLENBERGIA LINDHEIMERI
	MFG	MEXICAN FEATHER GRASS	STIPA TENACISSIMA
	PMG	PINE MUHLY	MUHLENBERGIA DUBIA
	PFG	PINK FLAMINGO MUHLY GRASS	MUHLENBERGIA CAPILLARIS 'PINK FLAMINGOS'
	SMG	SEEP MUHLY	MUHLENBERGIA REVERCHONII

ANNUALS/PERENNIALS	CODE	COMMON NAME	BOTANICAL NAME
	BDA	BLACKFOOT DAISY	MELAMPODIUM LEUCANTHUM
	BMF	BLUE MIST FLOWER	CONOCLINIUM COELESTINUM
	PLU	BLUE PLUMBAGO	PLUMBAGO AURICULATA
	BLB	BULBINE	BULBINE FRUTESCENS
	BUI	BUTTERFLY/MOREA IRIS	DIETES IRIDIOIDES
	CCD	COPPER CANYON DAISY	TAGETES LEMMONII
	DAM	DAMIANITA	CHRYSACTINIA MEXICANA
	AGD	DWARF LILY OF THE NILE	AGAPANTHUS AFRICANUS MINOR 'DWARF BLUE'
	FAS	FRIKARTI ASTER	ASTER X FRIKARTII
	IND	INDIGO SPIREA SALVIA	SALVIA X 'INDIGO SPIRES'
	AGA	LILY OF THE NILE	AGAPANTHUS AFRICANUS
	MBS	MEXICAN BUSH SAGE	SALVIA LEUCANTHA
	RDR	RED DRIFT ROSE	ROSA X 'MEIGALPIO'
	SKU	SKULLCAP	SCUTELLARIA SUFFRUTESCENS
	GAR	SOCIETY GARLIC	TULBAGHIA VIOLACEA
	COL	TEXAS GOLD COLUMBINE	AQUILEGIA CHRYSANTHA 'HINKLEYANA'
	TXL	TEXAS LANTANA	LANTANA URTICOIDES
	ROS	UPRIGHT ROSEMARY	ROSMARINUS OFFICINALIS 'TUSCAN BLUE'
	YLB	YELLOWBELLS	TECOMA STANS
	ZEX	ZEXMENIA	WEDELIA TEXANA

SUCCULENTS	CODE	COMMON NAME	BOTANICAL NAME
	BNL	BLUE NOLINA	NOLINA NELSONI 'BLUE NOLINA'
	RYU	DESERT DUSK RED YUCCA	HESPERALOE PARVIFLORA 'MSWINPERMA'
	HAV	HAVARD'S CENTURY PLANT	AGAVE HAVARDIANA
	OMP	OLD MEXICO PRICKLYPEAR	OPUNTIA GOMEI 'OLD MEXICO'
	PRP	PURPLE PRICKLYPEAR	OPUNTIA SANTA-RITA
	SOT	TEXAS SOTOL	DASYLIRION TEXANUM

GROUND COVERS	CODE	COMMON NAME	BOTANICAL NAME
	MUL	BARK MULCH	
	TIF	BERMUDA GRASS	CYNODON DACTYLON 'TIF 419'
	BD	BUFFALO GRASS	BOUTELOUA DACTYLOIDES

REVISIONS		
NO.	DATE	DESCRIPTION

DUNAWAY
118 Broadway • Suite 204 • San Antonio, Texas 78205
Tel: 210.267.5246
TBAE REG. F-11142

muñoz
723 S. Flores • San Antonio, Texas 78204
210.349.1163 • www.munoz-co.com

PLANTING PLAN

WORLD HERITAGE CENTER
SAN ANTONIO, TEXAS

PRELIMINARY
FOR REVIEW ONLY
These documents are for Design Review and not intended for Construction, Bidding or Permit Purposes. They were prepared by, or under the supervision of:
Bryan Kye Mask
L.A.# 2369

JOB NO.	5675.001
DESIGNED BY:	TLL
DRAWN BY:	MRS
CHECKED BY:	BKM
DATE:	12/01/2021
SHEET:	L4.03

FILE PATH: C:\Production\400\005605\05675\001\PLA\Drawings\95% CD\Plot Sheets\95% CD\Plot Sheets\5675.001-Planting Plan

FILENAME: 5675.001-Planting Plan.dwg
PLOTTED BY: Dionora Ramirez
LAST SAVED: Thursday, December 02, 2021
PLOTTED ATT: 3.95:35 PM
PLOTTED WITH: MONO.CTB PDF.pc3

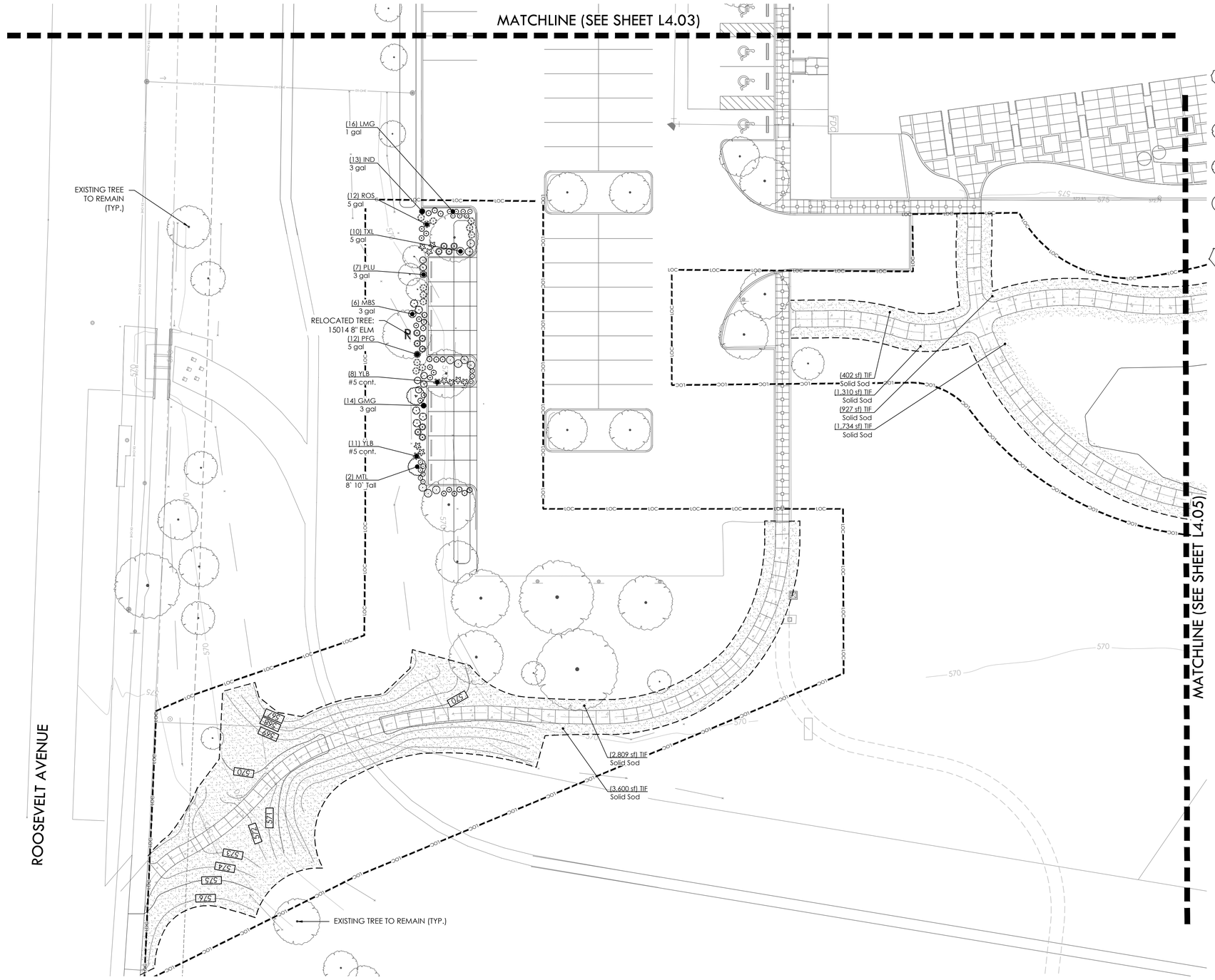

PLANT SCHEDULE

TREES	CODE	COMMON NAME	BOTANICAL NAME
	MTL	TEXAS MOUNTAIN LAUREL	SOPHORA SECUNDIFLORA
	PER	TEXAS PERSIMMON	DIOSPYROS TEXANA

ORNAMENTAL TREES	CODE	COMMON NAME	BOTANICAL NAME
	POH	'PRIDE OF HOUSTON' YAUPON HOLLY	ILEX VOMITORIA 'PRIDE OF HOUSTON'
	SDW	ART'S SEEDLESS DESERT WILLOW	CHILOPSIS LINEARIS 'ART'S SEEDLESS'
	BDW	BUBBA DESERT WILLOW	CHILOPSIS LINEARIS 'BUBBA'
	LDW	LUCRETIA HAMILTON DESERT WILLOW	CHILOPSIS LINEARIS 'LUCRETIA HAMILTON' TM
	RET	RETAMA	PARKINSONIA ACULEATA
	DCI	SEEDLESS DESERT WILLOW	CHILOPSIS LINEARIS ART'S SEEDLESS

SHADE TREES	CODE	COMMON NAME	BOTANICAL NAME
	ELM	CEDAR ELM	ULMUS CRASSIFOLIA
	OAK	LIVE OAK	QUERCUS VIRGINIANA
	MSY	MEXICAN SYCAMORE	PLATANUS MEXICANA

SHRUBS	CODE	COMMON NAME	BOTANICAL NAME
	DWX	DWARF SOUTHERN WAX MYRTLE	MYRICA PUSILLA
	FCB	FIRECRACKER PLANT	RUSSELIA EQUISETIFORMIS
	GCO	GRAY COTONEASTER	COTONEASTER HORIZONTALIS
	MCS	MEALY CUP SAGE	SALVIA FARINACEA 'TEXAS VIOLET' TM
	MEF	MEXICAN FLAME	ANISACANTHUS QUADRIFIDUS
	RBS	RIO BRAVO SAGE	LEUCOPHYLLUM LANGMANIAE 'RIO BRAVO' TM
	SCS	SCARLET SAGE	SALVIA GREGGII

GRASSES	CODE	COMMON NAME	BOTANICAL NAME
	BGG	BLUE GRAMA GRASS 'BLONDE AMBITION'	BOUTELOUA GRACILIS 'BLONDE AMBITION'
	DRG	DEER GRASS	MUHLENBERGIA RIGENS
	GMG	GULF COAST MUHLY	MUHLENBERGIA CAPILLARIS 'GULF COAST'
	LMG	LINDHEIMER'S MUHLY	MUHLENBERGIA LINDHEIMERI
	MFG	MEXICAN FEATHER GRASS	STIPA TENACISSIMA
	PMG	PINE MUHLY	MUHLENBERGIA DUBIA
	PFG	PINK FLAMINGO MUHLY GRASS	MUHLENBERGIA CAPILLARIS 'PINK FLAMINGOS'
	SMG	SEEP MUHLY	MUHLENBERGIA REVERCHONII

ANNUALS/PERENNIALS	CODE	COMMON NAME	BOTANICAL NAME
	BDA	BLACKFOOT DAISY	MELAMPODIUM LEUCANTHUM
	BMF	BLUE MIST FLOWER	CONOCLINIUM COELESTINUM
	PLU	BLUE PLUMBAGO	PLUMBAGO AURICULATA
	BLB	BULBINE	BULBINE FRUTESCENS
	BUI	BUTTERFLY/MOREA IRIS	DIETES IRIDIOIDES
	CCD	COPPER CANYON DAISY	TAGETES LEMMONII
	DAM	DAMIANITA	CHRYSACTINIA MEXICANA
	AGD	DWARF LILY OF THE NILE	AGAPANTHUS AFRICANUS MINOR 'DWARF BLUE'
	FAS	FRIKARTI ASTER	ASTER X FRIKARTII
	IND	INDIGO SPIREA SALVIA	SALVIA X 'INDIGO SPIRES'
	AGA	LILY OF THE NILE	AGAPANTHUS AFRICANUS
	MBS	MEXICAN BUSH SAGE	SALVIA LEUCANTHA
	ROR	RED DRIFT ROSE	ROSA X 'MEIGALPIO'
	SKU	SKULLCAP	SCUTELLARIA SUFFRUTESCENS
	GAR	SOCIETY GARLIC	TULBAGHIA VIOLACEA
	COL	TEXAS GOLD COLUMBINE	AQUILEGIA CHRYSANTHA 'HINKLEYANA'
	TXL	TEXAS LANTANA	LANTANA URTICOIDES
	ROS	UPRIGHT ROSEMARY	ROSMARINUS OFFICINALIS 'TUSCAN BLUE'
	YLB	YELLOWBELLS	TECOMA STANS
	ZEX	ZEXMENIA	WEDELIA TEXANA

SUCCULENTS	CODE	COMMON NAME	BOTANICAL NAME
	BNL	BLUE NOLINA	NOLINA NELSONI 'BLUE NOLINA'
	RYU	DESERT DUSK RED YUCCA	HESPERALOE PARVIFLORA 'MSWNPERMA'
	HAV	HAVARD'S CENTURY PLANT	AGAVE HAVARDIANA
	OMP	OLD MEXICO PRICKLYPEAR	OPUNTIA GOMEI 'OLD MEXICO'
	PRP	PURPLE PRICKLYPEAR	OPUNTIA SANTA-RITA
	SOT	TEXAS SOTOL	DASYLIRION TEXANUM

GROUND COVERS	CODE	COMMON NAME	BOTANICAL NAME
	MUL	BARK MULCH	
	TIF	BERMUDA GRASS	CYNODON DACTYLON 'TIF 419'
	BD	BUFFALO GRASS	BOUTELOUA DACTYLOIDES

NORTH

GRAPHIC SCALE
0 20 40
1 inch = 20'

REVISIONS		
NO.	DATE	DESCRIPTION

DUNAWAY
118 Broadway • Suite 204 • San Antonio, Texas 78205
Tel: 210.267.5246
TBPELS: F-11149

muñoz
723 S. Flores • San Antonio, Texas 78204
210.349.1163 • www.munoz-co.com

PLANTING PLAN

WORLD HERITAGE CENTER
SAN ANTONIO, TEXAS

PRELIMINARY
FOR REVIEW ONLY
These documents are for Design Review and not intended for Construction, Bidding or Permit Purposes. They were prepared by, or under the supervision of:
Bryan Kye Mask
L.A.# 2369

JOB NO.	5675.001
DESIGNED BY:	TLL
DRAWN BY:	MRS
CHECKED BY:	BKM
DATE:	12/01/2021
SHEET:	L4.04

FILE PATH: C:\Production\4000\0056\05675\001\PLA\Drawings\95% CD\Plot Sheets\Grading Plan.dwg

FILENAME: 5675.001-Planting Plan.dwg
PLOTTED BY: Dawson Kapchar
LAST SAVED: Thursday, December 02, 2021
PLOTTED ON: 8.5 in. = 11.0 in.
PLOTTED WITH: STANDARD.CTB
OUTPUT TYPE: 1-DWG to PDF.pc3

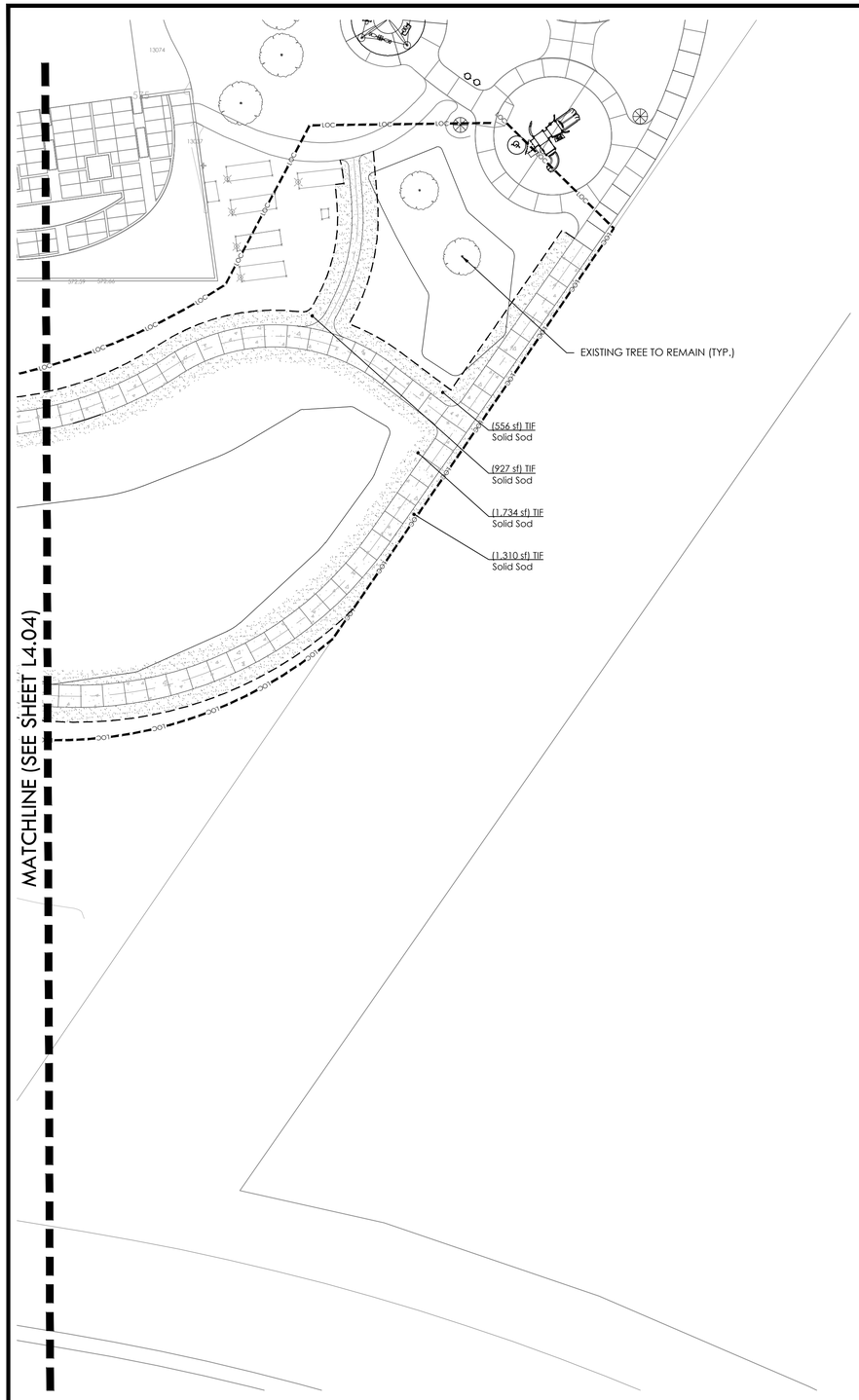

PLANT SCHEDULE

TREES	CODE	COMMON NAME	BOTANICAL NAME
	MTL	TEXAS MOUNTAIN LAUREL	SOPHORA SECUNDIFLORA
	PER	TEXAS PERSIMMON	DIOSPYROS TEXANA
ORNAMENTAL TREES	**CODE**	**COMMON NAME**	**BOTANICAL NAME**
	POH	'PRIDE OF HOUSTON' YAUPON HOLLY	ILEX VOMITORIA 'PRIDE OF HOUSTON'
	SDW	ART'S SEEDLESS DESERT WILLOW	CHILOPSIS LINEARIS 'ART'S SEEDLESS'
	BDW	BUBBA DESERT WILLOW	CHILOPSIS LINEARIS 'BUBBA'
	LDW	LUCRETIA HAMILTON DESERT WILLOW	CHILOPSIS LINEARIS 'LUCRETIA HAMILTON' TM
	RET	RETAMA	PARKINSONIA ACULEATA
	DCI	SEEDLESS DESERT WILLOW	CHILOPSIS LINEARIS ART'S SEEDLESS
SHADE TREES	**CODE**	**COMMON NAME**	**BOTANICAL NAME**
	ELM	CEDAR ELM	ULMUS CRASSIFOLIA
	OAK	LIVE OAK	QUERCUS VIRGINIANA
	MSY	MEXICAN SYCAMORE	PLATANUS MEXICANA
SHRUBS	**CODE**	**COMMON NAME**	**BOTANICAL NAME**
	DWX	DWARF SOUTHERN WAX MYRTLE	MYRICA PUSILLA
	FCB	FIRECRACKER PLANT	RUSSELIA EQUISETIFORMIS
	GCO	GRAY COTONEASTER	COTONEASTER HORIZONTALIS
	MCS	MEALY CUP SAGE	SALVIA FARINACEA 'TEXAS VIOLET' TM
	MEF	MEXICAN FLAME	ANISACANTHUS QUADRIFIDUS
	RBS	RIO BRAVO SAGE	LEUCOPHYLLUM LANGMANIAE 'RIO BRAVO' TM
	SCS	SCARLET SAGE	SALVIA GREGGII
GRASSES	**CODE**	**COMMON NAME**	**BOTANICAL NAME**
	BGG	BLUE GRAMA GRASS 'BLONDE AMBITION'	BOUTELOUA GRACILIS 'BLONDE AMBITION'
	DRG	DEER GRASS	MUHLENBERGIA RIGENS
	GMG	GULF COAST MUHLY	MUHLENBERGIA CAPILLARIS 'GULF COAST'
	LMG	LINDHEIMER'S MUHLY	MUHLENBERGIA LINDHEIMERI
	MFG	MEXICAN FEATHER GRASS	STIPA TENACISSIMA
	PMG	PINE MUHLY	MUHLENBERGIA DUBIA
	PFG	PINK FLAMINGO MUHLY GRASS	MUHLENBERGIA CAPILLARIS 'PINK FLAMINGOS'
	SMG	SEEP MUHLY	MUHLENBERGIA REVERCHONII
ANNUALS/PERENNIALS	**CODE**	**COMMON NAME**	**BOTANICAL NAME**
	BDA	BLACKFOOT DAISY	MELAMPODIUM LEUCANTHUM
	BMF	BLUE MIST FLOWER	CONOCLINIUM COELESTINUM
	PLU	BLUE PLUMBAGO	PLUMBAGO AURICULATA
	BLB	BULBINE	BULBINE FRUTESCENS
	BUI	BUTTERFLY/MOREA IRIS	DIETES IRIDIOIDES
	CCD	COPPER CANYON DAISY	TAGETES LEMMONII
	DAM	DAMIANITA	CHRYSACTINIA MEXICANA
	AGD	DWARF LILY OF THE NILE	AGAPANTHUS AFRICANUS MINOR 'DWARF BLUE'
	FAS	FRIKARTI ASTER	ASTER X FRIKARTII
	IND	INDIGO SPIREA SALVIA	SALVIA X 'INDIGO SPIRES'
	AGA	LILY OF THE NILE	AGAPANTHUS AFRICANUS
	MBS	MEXICAN BUSH SAGE	SALVIA LEUCANTHA
	RDR	RED DRIFT ROSE	ROSA X 'MEIGALPIO'
	SKU	SKULLCAP	SCUTELLARIA SUFFRUTESCENS
	GAR	SOCIETY GARLIC	TULBAGHIA VIOLACEA
	COL	TEXAS GOLD COLUMBINE	AQUILEGIA CHRYSANTHA 'HINKLEYANA'
	TXL	TEXAS LANTANA	LANTANA URTICOIDES
	ROS	UPRIGHT ROSEMARY	ROSMARINUS OFFICINALIS 'TUSCAN BLUE'
	YLB	YELLOWBELLS	TECOMA STANS
	ZEX	ZEXMENIA	WEDELIA TEXANA
SUCCULENTS	**CODE**	**COMMON NAME**	**BOTANICAL NAME**
	BNL	BLUE NOLINA	NOLINA NELSONII 'BLUE NOLINA'
	RYU	DESERT DUSK RED YUCCA	HESPERALOE PARVIFLORA 'MSWNPERMA'
	HAV	HAVARD'S CENTURY PLANT	AGAVE HAVARDIANA
	OMP	OLD MEXICO PRICKLYPEAR	OPUNTIA GOMEI 'OLD MEXICO'
	PRP	PURPLE PRICKLYPEAR	OPUNTIA SANTA-RITA
	SOT	TEXAS SOTOL	DASYLIRION TEXANUM

GROUND COVERS	CODE	COMMON NAME	BOTANICAL NAME
	MUL	BARK MULCH	
	TIF	BERMUDA GRASS	CYNODON DACTYLON 'TIF 419'
	BD	BUFFALO GRASS	BOUTELOUA DACTYLOIDES

NORTH

GRAPHIC SCALE
0 20 40
1 inch = 20'

REVISIONS

NO.	DATE	DESCRIPTION

DUNAWAY
118 Broadway • Suite 204 • San Antonio, Texas 78205
Tel: 210.267.5246
TBAE Reg. F-11149

muñoz
723 S. Flores • San Antonio, Texas 78204
210.349.1163 • www.munoz-co.com

PLANTING PLAN

WORLD HERITAGE CENTER
SAN ANTONIO, TEXAS

PRELIMINARY
FOR REVIEW ONLY
These documents are for Design Review and not intended for Construction, Bidding or Permit Purposes. They were prepared by, or under the supervision of:
Bryan Kye Mask
L.A.# 2369

JOB NO.	5675.001
DESIGNED BY:	TLL
DRAWN BY:	MRS
CHECKED BY:	BKM
DATE:	12/01/2021
SHEET:	L4.05

FULL PATH: G:\Production\4000\05605\05675\001\PLA\Drawings\95% CD\Plot Sheets\Production\4000\05605\05675\001\PLA\Drawings\95% CD\Plot Sheets\5675.001-Planting Plan

FILENAME: 5675.001-Planting Plan.dwg
PLOTTED BY: Damaris Reynosa
LAST SAVED: Thursday, December 02, 2021
PLOTTED ATT: 4:03:09 PM
PLOTTED WITH: STANDARD.CTB pc3

LANDSCAPE NOTES:

1. ORDINANCE PLAN MAY REQUIRE REVISIONS WHEN TREE SURVEY IS PROVIDED.

2. ALL PLANTED AREAS SHALL BE WATERED WITH AN UNDERGROUND IRRIGATION SYSTEM. THE IRRIGATION SYSTEM SHALL BE AUTOMATICALLY CONTROLLED WITH A FULLY PROGRAMMABLE ET BASED CONTROLLER WITH RAIN AND FREEZE SENSORS. THE IRRIGATION SYSTEM, AND INSTALLATION SHALL MEET ALL OF THE APPROPRIATE REQUIREMENTS OF THE LOCAL MUNICIPALITY.

3. ISOLATED PLANT MATERIAL TO RECEIVE DRIP TUBING IN A RING PATTERN AROUND THE ROOT BALL. WHERE POSSIBLE, ELIMINATE DRIP TUBING FROM LARGE AREAS VOID OF PLANT MATERIAL.

4. SOIL MIX FOR ALL PLANTING AREAS SHALL BE MANUFACTURED SOIL, CONSISTING OF MANUFACTURER'S BASIC TOPSOIL, BLENDED IN A MANUFACTURING FACILITY WITH SAND, STABILIZED ORGANIC SOIL AMENDMENTS, AND OTHER MATERIALS TO PRODUCE VIABLE PLANTING SOIL. MANUFACTURED SOIL SHOULD ACHIEVE PH OF 5 TO 7.5 AND MINIMUM OF 4 PERCENT ORGANIC-MATTER CONTENT, FRIABLE, AND WITH SUFFICIENT STRUCTURE TO GIVE GOOD TILL AND AERATION.

5. AMEND MANUFACTURER'S BASIC SOIL WITH SULFUR (1-1/2 POUNDS PER CUBIC YARD), AND COMMERCIAL FERTILIZER (1/2 POUND PER CUBIC YARD).

6. IN TREE AND SHRUB PLANTINGS, APPLY AMENDED SOIL TO MINIMUM DEPTH OF 12 INCHES. FOR TURF AREAS, TILL 2" OF AMENDED MANUFACTURER'S SOIL MIX INTO EXISTING SUBGRADE.
   A) CONTRACTOR SHALL PREPARE AND FURNISH PROPER SUBGRADE ELEVATIONS FOR USE BY THE LANDSCAPE CONTRACTOR.
   B) ALL TOPSOIL SHALL BE FREE OF STONES, ROOTS, CLODS, CONCRETE, BASE, CALICHE, CONSTRUCTION DEBRIS, AND ANY OTHER FOREIGN MATERIAL NOT BENEFICIAL FOR PLANT GROWTH

5. ALL TREES AND SHRUB AREAS TO BE MULCHED TO A DEPTH OF 4 INCHES WITH SHREDDED TEXAS NATIVE MULCH. MAINTAIN A 1FT CLEAR AREA FROM THE BASE OF THE TREE FREE OF MULCH TO ALLOW OXYGEN EXCHANGE.

6. LAY SOD WITHIN 24 HOURS OF HARVESTING. DO NOT LAY SOD IF DORMANT OR IF GROUND IS FROZEN OR MUDDY.

7. LAY SOD TO FORM A SOLID MASS WITH TIGHTLY FITTED JOINTS. BUTT ENDS AND SIDES OF SOD; DO NOT STRETCH OR OVERLAP. STAGGER SOD STRIPS OR PADS TO OFFSET JOINTS IN ADJACENT COURSES. AVOID DAMAGE TO SOIL OR SOD DURING INSTALLATION. TAMP AND ROLL LIGHTLY TO ENSURE CONTACT WITH SOIL, ELIMINATE AIR POCKETS, AND FORM A SMOOTH SURFACE. WORK SIFTED SOIL OR FINE SAND INTO CRACKS BETWEEN PIECES OF SOD; REMOVE EXCESS TO AVOID SMOTHERING SOD AND ADJACENT GRASS.
   A) LAY SOD ACROSS SLOPES EXCEEDING 1:3.
   B) ANCHOR SOD ON SLOPES EXCEEDING 1:6 WITH WOOD PEGS OR STEEL STAPLES SPACED AS RECOMMENDED BY SOD MANUFACTURER BUT NOT LESS THAN TWO ANCHORS PER SOD STRIP TO PREVENT SLIPPAGE.

8. SATURATE SOD WITH FINE WATER SPRAY WITHIN TWO HOURS OF PLANTING. DURING FIRST WEEK AFTER PLANTING, WATER DAILY OR MORE FREQUENTLY AS NECESSARY TO MAINTAIN MOIST SOIL TO A MINIMUM DEPTH OF 1-1/2 INCHES BELOW SOD.

9. GENERAL: MAINTAIN AND ESTABLISH TURF BY WATERING, FERTILIZING, WEEDING, MOWING, TRIMMING, REPLANTING, AND PERFORMING OTHER OPERATIONS AS REQUIRED TO ESTABLISH HEALTHY, VIABLE TURF. ROLL, REGRADE, AND REPLANT BARE OR ERODED AREAS AND REMULCH TO PRODUCE A UNIFORMLY SMOOTH TURF. PROVIDE MATERIALS AND INSTALLATION THE SAME AS THOSE USED IN THE ORIGINAL INSTALLATION. MAINTENANCE PERIOD FOR TURF AREAS ONLY IS 60 DAYS PAST SUBSTANTIAL COMPLETION.

10. MOW TURF AS SOON AS TOP GROWTH IS TALL ENOUGH TO CUT. REPEAT MOWING TO MAINTAIN SPECIFIED HEIGHT WITHOUT CUTTING MORE THAN ONE-THIRD OF GRASS HEIGHT. REMOVE NO MORE THAN ONE-THIRD OF GRASS-LEAF GROWTH IN INITIAL OR SUBSEQUENT MOWINGS.

11. TURF INSTALLATIONS SHALL MEET THE FOLLOWING CRITERIA AS DETERMINED BY LANDSCAPE ARCHITECT:
   A) SATISFACTORY SODDED TURF: AT END OF MAINTENANCE PERIOD, A HEALTHY, WELL-ROOTED, EVEN-COLORED, VIABLE TURF HAS BEEN ESTABLISHED, FREE OF WEEDS, OPEN JOINTS, BARE AREAS, AND SURFACE IRREGULARITIES.
   B) SATISFACTORY SEEDED TURF: AT END OF MAINTENANCE PERIOD, A HEALTHY, UNIFORM, CLOSE STAND OF GRASS HAS BEEN ESTABLISHED, FREE OF WEEDS AND SURFACE IRREGULARITIES, WITH COVERAGE EXCEEDING 90 PERCENT OVER ANY 10 SQ. FT. AND BARE SPOTS NOT EXCEEDING 5 BY 5 INCHES.

12. USE SPECIFIED MATERIALS TO REESTABLISH TURF THAT DOES NOT COMPLY WITH REQUIREMENTS, AND CONTINUE MAINTENANCE UNTIL TURF IS SATISFACTORY.

13. SPECIAL WARRANTY: INSTALLER AGREES TO REPAIR OR REPLACE PLANTINGS AND ACCESSORIES THAT FAIL IN MATERIALS, WORKMANSHIP, OR GROWTH WITHIN SPECIFIED WARRANTY PERIOD.
   A) FAILURES INCLUDE, BUT ARE NOT LIMITED TO, THE FOLLOWING:
      A)A) DEATH AND UNSATISFACTORY GROWTH, EXCEPT FOR DEFECTS RESULTING FROM ABUSE, LACK OF ADEQUATE MAINTENANCE, OR NEGLECTED BY OWNER.
      A)B) STRUCTURAL FAILURES INCLUDING PLANTINGS FALLING OR BLOWING OVER.
   B) WARRANTY PERIODS: FROM DATE OF SUBSTANTIAL COMPLETION.
      B)A) TREES, SHRUBS, VINES, AND ORNAMENTAL GRASSES: 12 MONTHS.
      B)B) GROUNDCOVERS, BIENNIALS, PERENNIALS, AND OTHER PLANTS: 12 MONTHS.

14. LANDSCAPE CONTRACTOR SHALL NOTIFY THE LANDSCAPE ARCHITECT OF ANY QUESTIONS REGARDING APPLICATION OF PROPOSED PLANT MATERIAL PRIOR TO INSTALLATION - ESPECIALLY QUESTIONS THAT MAY AFFECT OR ALTER THE WARRANTY OF SAID MATERIAL.

15. STAKE OR GUY TREES ONLY IF THEY ARE NOT ABLE TO STAND VERTICAL ON THEIR OWN.

16. REMOVE ALL STONES AND DEBRIS LARGER THAN 1 INCH IN ANY DIMENSION ON THE SURFACE IN AREAS WHERE TURF IS APPLIED.

17. ALL QUANTITIES SHOWN ON PLANS TO BE VERIFIED BY LANDSCAPE CONTRACTOR. LANDSCAPE CONTRACTOR SHALL BE RESPONSIBLE FOR INSTALLING ALL LABELED PLANT MATERIAL ON PLANS.

18. ALL FINAL SHAPING AND RAKING OF THE TOPSOIL/FINISH GRADES SHALL BE REVIEWED BY OWNER OR LANDSCAPE ARCHITECT PRIOR TO APPLICATION OF PLANT MATERIAL. BERMS, IF REQUIRED SHALL BE INSTALLED IN 12 INCH LAYERS/LIFTS AND COMPACTED. EXCESSIVE SLOPES ON BERMS WHICH MAY CAUSE MAINTENANCE PROBLEMS SHALL BE REVIEWED BY THE LANDSCAPE ARCHITECT.

19. VERIFY EXISTENCE OF UNDERGROUND UTILITIES PRIOR TO EXCAVATION FOR SITE WORK AND PLANTING.

20. CONTRACTOR SHALL TAKE ALL NECESSARY STEPS TO PROTECT EXISTING UTILITIES AT ALL TIMES.

21. INSTALL IRRIGATION SYSTEM PRIOR TO APPLICATION OF TOPSOIL OR PLANTING SOIL MIX.

22. ANY EXISTING SITE IMPROVEMENT OR UTILITY REMOVED, DAMAGED, OR UNDERCUT BY THE CONTRACTOR'S OPERATIONS SHALL BE REPAIRED OR REPLACED AS DIRECTED BY THE CONTRACTING OFFICER'S REPRESENTATIVE AND APPROVED BY THE RESPECTIVE UTILITY AT THE CONTRACTOR'S EXPENSE.

23. CONTRACTOR SHALL BE RESPONSIBLE FOR RESTORING TO ITS ORIGINAL OR BETTER CONDITION ANY DAMAGES DONE TO EXISTING FENCES, CONCRETE ISLANDS, STREET PAVING, CURBS, SHRUBS, TREES, DRIVEWAYS, ETC., SCHEDULE TO REMAIN (NO SEPARATE PAY ITEM).

24. TREES WHICH ARE DAMAGED OR LOST DUE TO THE CONTRACTOR'S NEGLIGENCE DURING CONSTRUCTION SHALL BE MITIGATED AND REPLACED AT CONTRACTOR'S EXPENSE.

25. TREES MUST BE MAINTAINED IN GOOD HEALTH THROUGHOUT THE CONSTRUCTION PROCESS. MAINTENANCE MAY INCLUDE, BUT IS NOT LIMITED TO: WATERING THE ROOT PROTECTION ZONE, WASHING FOLIAGE, FERTILIZATION, PRUNING, ADDITIONAL MULCH APPLICATIONS, AND OTHER MAINTENANCE AS NEEDED ON THE PROJECT.

26. ALL DISTURBED AREAS WITHIN LIMITS OF CONSTRUCTION SHALL BE HYDROMULCHED AS DESCRIBED ON PLANS.

27. ROOTS SHALL BE CUT WITH A ROCK SAW OR BY HAND, NOT BY AN EXCAVATOR OR OTHER ROAD CONSTRUCTION EQUIPMENT.

28. METAL EDGER: COL-MET COMMERCIAL GRADE STEEL EDGING $\frac{1}{8}$" THICK. INSTALL PER MANUFACTURERS RECOMMENDATIONS.

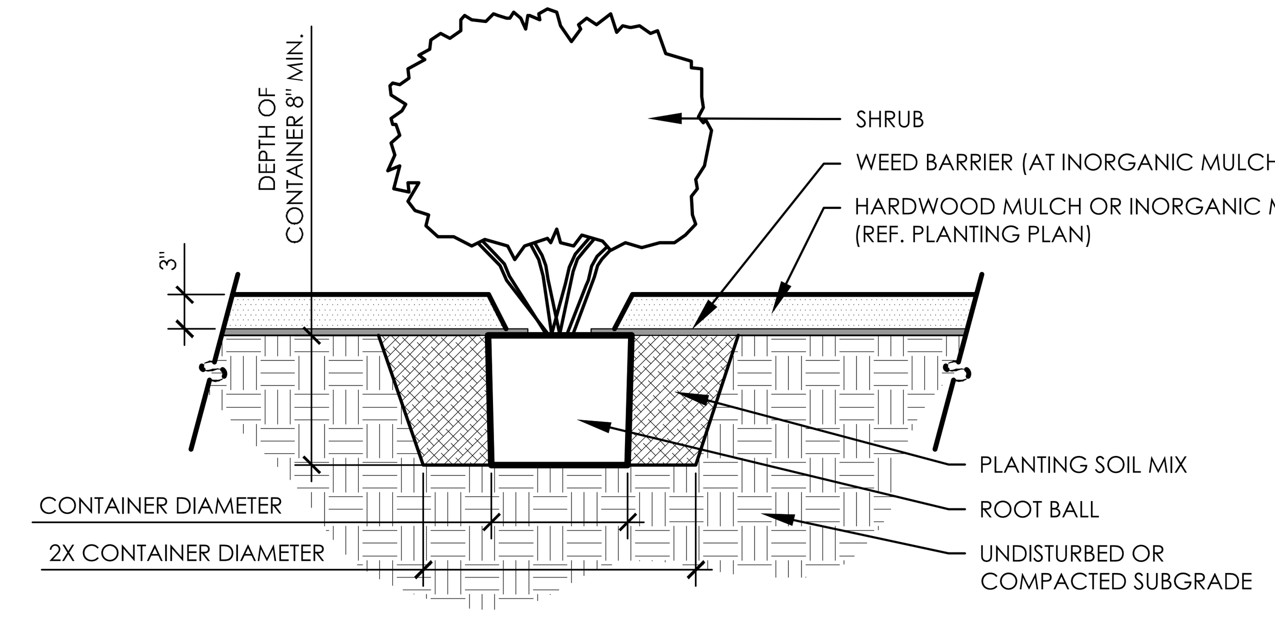

NOTES:
1. CUT 'X' IN WEED BARRIER SAME DIAMETER AS PLANT CONTAINER TO ALLOW SHRUB PLANTING
2. RE-COVER PLANT PIT WITH WEED BARRIER AFTER PLANT PLACEMENT AND APPLY INORGANIC MULCH

A **SHRUB PLANTING** SCALE: 1" = 1'-0"

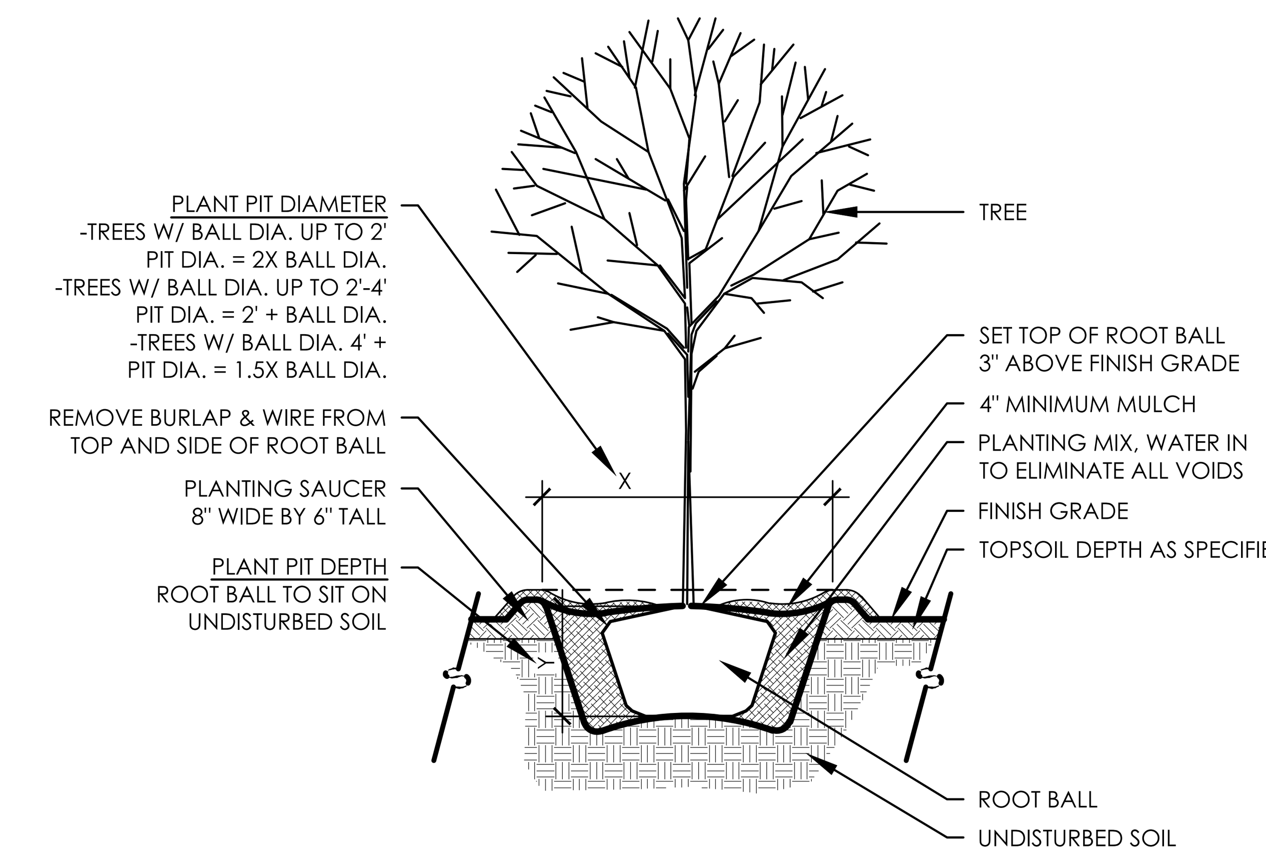

B **TREE PLANTING** SCALE: 1/2" = 1'-0"

PLANT SCHEDULE

TREES	QTY	COMMON NAME	BOTANICAL NAME	CALIPER	CONT.	HEIGHT	SPREAD	REMARKS
MTL	8	TEXAS MOUNTAIN LAUREL	SOPHORA SECUNDIFLORA	8` 10` TALL		8`-10`	5`- 6`	15`-20` EVERGREEN, PURPLE BLOOMS SPRING, 10` SPREAD
PER	12	TEXAS PERSIMMON	DIOSPYROS TEXANA	8`-10` TALL		8`-10`	FULL	20`-25` EVRGRN, GRAY PEELING BARK, SUN/P.SU, 15`-20` SPREAD
ORNAMENTAL TREES	QTY	COMMON NAME	BOTANICAL NAME	CALIPER	CONT.	HEIGHT	SPREAD	REMARKS
POH	2	'PRIDE OF HOUSTON' YAUPON HOLLY	ILEX VOMITORIA 'PRIDE OF HOUSTON'	2" CAL.		8`-10`		
SDW	3	ART'S SEEDLESS DESERT WILLOW	CHILOPSIS LINEARIS 'ART'S SEEDLESS'	8`-10` TALL		8`-10`	FULL	25` DECID. LARGE, PINK-ROSE BLOOMS SP/SU/FA. SEEDLESS, THORNLESS, HEAT TOLERANT, WATER-EFFICIENT.
BDW	4	BUBBA DESERT WILLOW	CHILOPSIS LINEARIS 'BUBBA'	8`-10` TALL		8` - 10`	FULL	30` DECID. FAST-GROWING, UPRIGHT. BURGUNDY, FRAGRANT BLOOMS SP/SU
LDW	2	LUCRETIA HAMILTON DESERT WILLOW	CHILOPSIS LINEARIS 'LUCRETIA HAMILTON' TM	8`-10` TALL		8` - 10`	FULL	18` DECID. NARROW, GREEN LEAVES. FRAGRANT, TRUMPET-SHAPED BLOOMS SU. WEEPING APPEARANCE.
RET	9	RETAMA	PARKINSONIA ACULEATA	8`-10` TALL		8`-10`	FULL	20`-25` DECID., YELLOW FLOWERS, SUN/SHADE, 15`-20` SPREAD
DCI	1	SEEDLESS DESERT WILLOW	CHILOPSIS LINEARIS ART'S SEEDLESS	8`-10` TALL		8`-10`	FULL	30` DECID. FAST-GROWING, UPRIGHT. BURGUNDY, FRAGRANT BLOOMS SP/SU
SHADE TREES	QTY	COMMON NAME	BOTANICAL NAME	CALIPER	CONT.	HEIGHT	SPREAD	REMARKS
ELM	4	CEDAR ELM	ULMUS CRASSIFOLIA	3" CAL.		6`-8`	3`	25`-30` DECIDUOUS, ADAPTABLE TO HEAVY CLAY. 80` SPREAD
OAK	3	LIVE OAK	QUERCUS VIRGINIANA	3" CAL.		10`	3`	35`-40` SEMI-EVRGRN, VERY ADAPTABLE, 60`-100` SPREAD
MSY	3	MEXICAN SYCAMORE	PLATANUS MEXICANA	2" CAL.		8`-10`	3`- 4`	30`-35` DECID., LRG. LVS., INSECT/DISEASE RESIST., 30` SPREAD
SHRUBS	QTY	COMMON NAME	BOTANICAL NAME	SIZE	CONT.	HEIGHT	SPACING	REMARKS
DWX	21	DWARF SOUTHERN WAX MYRTLE	MYRICA PUSILLA	5 GAL	15"- 18"	10"-12"	30" OC.	
FCB	31	FIRECRACKER PLANT	RUSSELIA EQUISETIFORMIS	5 GAL	12"-14"	14"	30" OC.	
GCO	27	GRAY COTONEASTER	COTONEASTER HORIZONTALIS	5 GAL	24" - 36"	FULL	48" OC.	
MCS	28	MEALY CUP SAGE	SALVIA FARINACEA `TEXAS VIOLET` TM	1 GAL	12"-18"	10"-12"	24" O.C.	
MEF	40	MEXICAN FLAME	ANISACANTHUS QUADRIFIDUS	1 GAL	16"-18"	24"	24" OC.	
RBS	43	RIO BRAVO SAGE	LEUCOPHYLLUM LANGMANIAE `RIO BRAVO` TM	5 GAL	12"-14"	10"-12"	36" OC	
SCS	35	SCARLET SAGE	SALVIA GREGGII	1 GAL	4"	FULL	12" OC.	
GRASSES	QTY	COMMON NAME	BOTANICAL NAME	SIZE	CONT.	HEIGHT	SPACING	REMARKS
BGG	66	BLUE GRAMA GRASS `BLONDE AMBITION`	BOUTELOUA GRACILIS `BLONDE AMBITION`	1 GAL	8"-10"	FULL	18" OC.	
DRG	29	DEER GRASS	MUHLENBERGIA RIGENS	1 GAL	12"-15"	FULL	24" OC.	
GMG	46	GULF COAST MUHLY	MUHLENBERGIA CAPILLARIS `GULF COAST`	3 GAL	20"-24"	FULL	30" OC.	
LMG	110	LINDHEIMER`S MUHLY	MUHLENBERGIA LINDHEIMERI	1 GAL	12"-15"	FULL	18" OC.	
MFG	48	MEXICAN FEATHER GRASS	STIPA TENACISSIMA	1 GAL	8"-10"	FULL	18" OC.	
PMG	72	PINE MUHLY	MUHLENBERGIA DUBIA	1 GAL	10"-12"	FULL	18" OC.	
PFG	56	PINK FLAMINGO MUHLY GRASS	MUHLENBERGIA CAPILLARIS `PINK FLAMINGOS`	5 GAL				
SMG	48	SEEP MUHLY	MUHLENBERGIA REVERCHONI	1 GAL	12"-15"	FULL	18" OC.	
ANNUALS/PERENNIALS	QTY	COMMON NAME	BOTANICAL NAME	SIZE	CONT.	HEIGHT	SPACING	REMARKS
BDA	59	BLACKFOOT DAISY	MELAMPODIUM LEUCANTHUM	4" POT	4" - 6"	FULL	9" OC.	18", STAR SHAPED YELLOW BLOOMS SUMMER, SUN
BMF	58	BLUE MIST FLOWER	CONOCLINIUM COELESTINUM	3 GAL	6" - 8"	FULL	12" OC.	
PLU	55	BLUE PLUMBAGO	PLUMBAGO AURICULATA	3 GAL	18"	FULL	30" OC.	
BLB	47	BULBINE	BULBINE FRUTESCENS	3 GAL	6" - 8"	FULL	18" OC.	
BUI	42	BUTTERFLY/MOREA IRIS	DIETES IRIDIOIDES	3 GAL	10"	FULL	18" OC.	2` - 3` IRIS LIKE IVS, EVERGREEN, WH/YEL/PUR, SP/SU
CCD	61	COPPER CANYON DAISY	TAGETES LEMMONII	3 GAL	10"	FULL	18" OC.	18" - 24" DECID. YELLOW BLOOM SP., SUN-PEPPER/LEMON SCENT
DAM	39	DAMIANITA	CHRYSACTINIA MEXICANA	3 GAL	6" - 8"	8"-10"	18" OC.	1`-2` EVERGREEN, YELLOW BLOOMS SP/SU/FALL, SUN
AGD	17	DWARF LILY OF THE NILE	AGAPANTHUS AFRICANUS MINOR `DWARF BLUE`	1 GAL	8"-10"	FULL	15" OC.	8" - 12" EVERGREEN STRAP. LVS., BLUE BLUME SP/SU
FAS	27	FRIKARTI ASTER	ASTER X FRIKARTII	1 GAL	12"	FULL	18" OC.	
IND	94	INDIGO SPIREA SALVIA	SALVIA X `INDIGO SPIRES`	3 GAL	14"-16"	12"-14"	24" OC.	5` TALL, BLUE BLOOMS SP/SU, SUN
AGA	26	LILY OF THE NILE	AGAPANTHUS AFRICANUS	3 GAL	12"-15"	FULL	18" OC.	2` X 3` EVERGREEN STRAP. LVS., BLUE BLOOM SP/SU
MBS	53	MEXICAN BUSH SAGE	SALVIA LEUCANTHA	3 GAL	14"-16"	12"-14"	36" OC	
RDR	74	RED DRIFT ROSE	ROSA X `MEIGALPIO`	1 GAL	10"	FULL	18" OC.	
SKU	190	SKULLCAP	SCUTELLARIA SUFFRUTESCENS	1 GAL	6"	FULL	18" OC.	
GAR	42	SOCIETY GARLIC	TULBAGHIA VIOLACEA	1 GAL	12"	FULL	18" OC.	PURPLE BLOOMS, SP/SU
COL	18	TEXAS GOLD COLUMBINE	AQUILEGIA CHRYSANTHA `HINKLEYANA`	3 GAL	10"	FULL	18" OC.	18"-24" DECID. YELLOW BLOOM SP., SHADE
TXL	41	TEXAS LANTANA	LANTANA URTICOIDES	5 GAL	20"-24"	FULL	30" OC.	18"-24", YEL/RED BLOOMS SP/SU/FA, NATIVE
ROS	32	UPRIGHT ROSEMARY	ROSMARINUS OFFICINALIS `TUSCAN BLUE`	5 GAL	16"-18"	14"-16"	36" OC	
YLB	63	YELLOWBELLS	TECOMA STANS	#5 CONT.	18"-36"	FULL	3` OC.	
ZEX	39	ZEXMENIA	WEDELIA TEXANA	1 GAL	8"	8"	18" OC.	
SUCCULENTS	QTY	COMMON NAME	BOTANICAL NAME	SIZE	CONT.	HEIGHT	SPACING	REMARKS
BNL	36	BLUE NOLINA	NOLINA NELSONI `BLUE NOLINA`	3 GAL				
RYU	80	DESERT DUSK RED YUCCA	HESPERALOE PARVIFLORA 'MSWNPERMA'	1 GAL	8"-10"	FULL	24" OC.	
HAV	38	HAVARD`S CENTURY PLANT	AGAVE HAVARDIANA	3 GAL	10"-12"	FULL	18" OC.	
OMP	35	OLD MEXICO PRICKLYPEAR	OPUNTIA GOMEI `OLD MEXICO`	5 GAL				
PRP	39	PURPLE PRICKLYPEAR	OPUNTIA SANTA-RITA	5 GAL	14"-16"	18"-24"	48" OC.	
SOT	37	TEXAS SOTOL	DASYLIRION TEXANUM	1 GAL	10"-12"	12"-14"	24" OC.	
GROUND COVERS	QTY	COMMON NAME	BOTANICAL NAME	SIZE	HEIGHT	SPREAD		
MUL	14,380 SF	BARK MULCH		3" DEPTH				
TIF	30,851 SF	BERMUDA GRASS	CYNODON DACTYLON `TIF 419`	SOLID SOD				
BD	12,263 SF	BUFFALO GRASS	BOUTELOUA DACTYLOIDES	SOLID SOD				

REVISIONS		
NO.	DATE	DESCRIPTION

DUNAWAY
118 Broadway•Suite 201•San Antonio, Texas 78205
Tel: 210.267.5246
(TX REG. F-1114)

muñoz
723 S. Flores • San Antonio, Texas 78204
210.349.1163 • www.munoz-co.com

PLANTING DETAILS & NOTES

WORLD HERITAGE CENTER
SAN ANTONIO, TEXAS

PRELIMINARY
FOR REVIEW ONLY
These documents are for Design Review and not intended for Construction, Bidding or Permit Purposes. They were prepared by, or under the supervision of:
Bryan Kye Mask
L.A.# 2369

JOB NO.	5675.001
DESIGNED BY:	TLL
DRAWN BY:	MRS
CHECKED BY:	BKM
DATE:	12/01/2021
SHEET:	L4.06

FULL PATH: G:\Production4000\005600\5675\001\PLA\Drawings\95% CD\Plot SheetsG:\Production4000\005600\5675\001\PLA\Drawings\95% CD\Plot Sheets\5675.001-Planting Details

FILENAME: 5675.001-Planting Details.dwg
PLOTTED BY: Damaris Martinez
PLOTTED ON: Thursday, December 02, 2021
PLOTTED AT: 4:04:44 PM
PLOTTED WITH: DWG To PDF.pc3

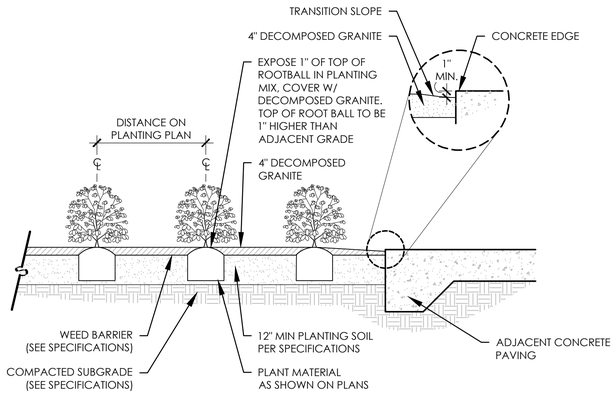

A **SHRUBS PLANTED W/DECOMPOSED GRANITE** SCALE: 1"=1'-0"

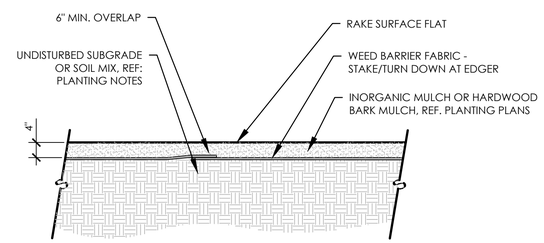

B **MULCH** SCALE: 3/4" = 1'-0"

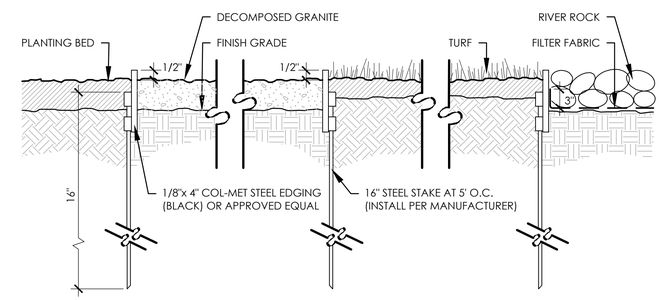

C **STEEL EDGING** SCALE: 1"=1'-0"

CITY OF SAN ANTONIO LANDSCAPE ORDINANCE CHARTS

Mandatory Criteria

Parking Lot Shading

Total Paved Area	19,298 SF		
Square Feet of Shaded Area for 25%	4824.5 SF	Minimum required	20 Points
Square Feet of Shaded Area for 35%	6754.3 SF	Additional	5 Points
Square Feet of Shaded Area for 50%	9649 SF	Additional	15 Points
SF Required	4824.5		
Existing Tree Shade Credits	3450		
Proposed Tree Shade Credits	8012.5		
Total Shade Credits	11462.5		
Parking Lot Shading Points Earned	35		

Proposed Tree Credit for Parking Lot Shading

QTY	Species	ShadeCredit	Total
2	Live Oak	656.25	1312.5
4	Cedar Elm	656.25	2625
3	Mexican Sycamore	900	2700
2	Yaupon Holly	137.5	275
4	Mountain Laurel	137.5	550
3	Desert Willow	137.5	412.5
1	Texas Prisimmon	137.5	137.5
		Total SF Shade	8012.5

Tree Preservation Credit Table

SY= Street Yard

Point Calculations	Full Credit in SY	QTY	Total	Half Credit in SY	QTY	Total	Half Credit out side SY	QTY	Total
Caliper equal to or exceeding 4" but less than 6"	3	0	0	1.5		0	1.5	0	0
Caliper equal to or exceeding 6" but less than 12"	4	3	12	2		0	2	0	0
Caliper equal to or exceeding 12" but less than 18"	6	0	0	3		0	3	0	0
Caliper equal to or exceeding 18"	8	0		4		0	4	0	0
		Subtotal	12		Subtotal	0		Subtotal	0
	Total Preservation Points		12						

Elective Criteria

Landscape Points	PTS
Existing Trees	12
Parking Lot Shading	35
Screening of Surface Parking	25
Street Trees	0
Understory Preservation	0
Total Points	72

REVISIONS

NO.	DATE	DESCRIPTION

DUNAWAY
1118 Broadway • Suite 204 • San Antonio, Texas 78205
tel: 210.267.9246
TBPELS F-11148

muñoz
723 S. Flores • San Antonio, Texas 78204
210.349.1163 • www.munoz-co.com

PLANTING DETAILS & NOTES

WORLD HERITAGE CENTER
SAN ANTONIO, TEXAS

PRELIMINARY
FOR REVIEW ONLY
These documents are for Design Review and not intended for Construction, Bidding or Permit Purposes. They were prepared by, or under the supervision of:
Bryan Kye Mask
L.A.# 2369

JOB NO.	5675.001
DESIGNED BY:	TLL
DRAWN BY:	MRS
CHECKED BY:	BKM
DATE:	12/01/2021
SHEET:	L4.07

FILE PATH: G:\Production\4000\005600\5675\001\PLA\Drawings\95% CD\Plot Plans\Dwg\5675.001 PLA Drawings 95% CD Plot Sheets\5675.001-Planting Details
FILENAME: 5675.001-Planting Details.dwg
PLOTTED BY: Thomas Aspinter
PLOTTED ON: Thursday, December 02, 2021
PLOTTED AT: 4:05:03 PM
PLOTTED with: DWG to PDF.pc3

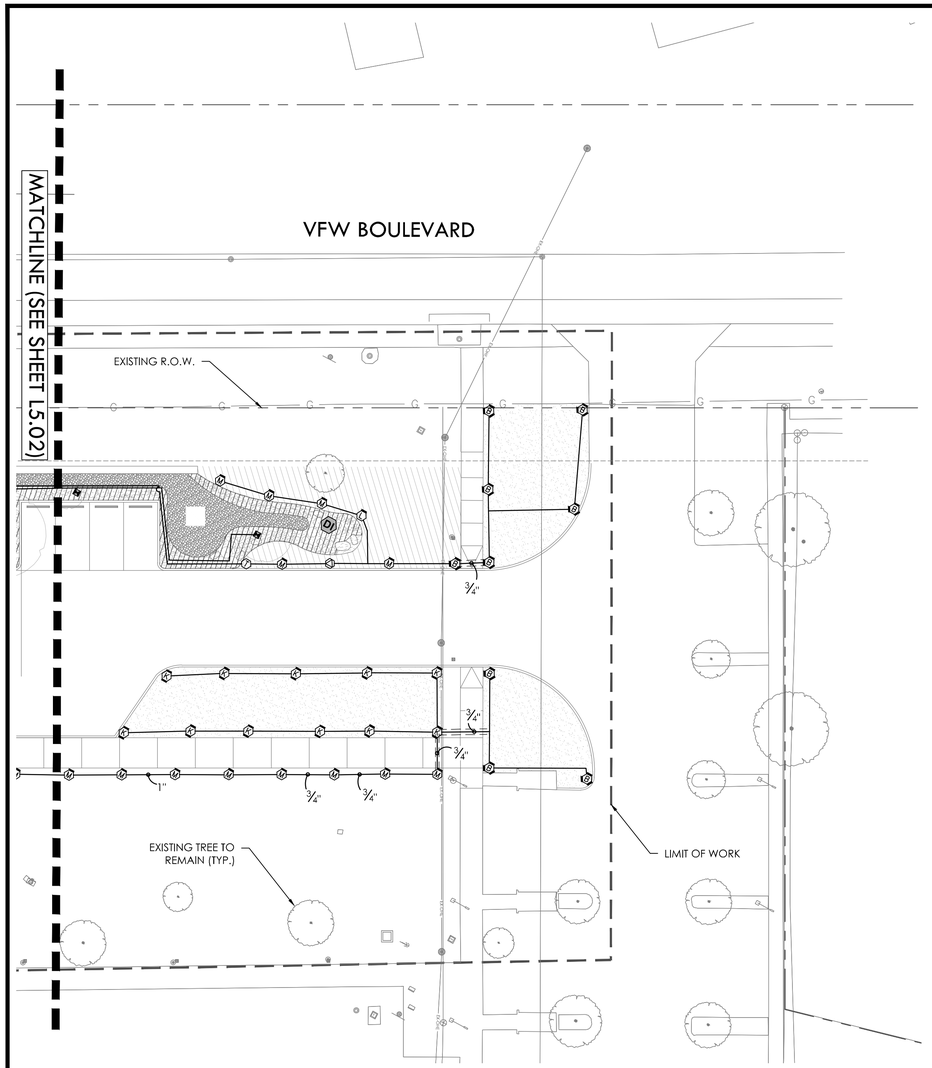

IRRIGATION SCHEDULE

SYMBOL	MANUFACTURER/MODEL/DESCRIPTION
T	ROTARY: HUNTER MP CORNER PROS-04-PRS40-CV TURF ROTATOR, 4" (10.16CM) POP-UP WITH FACTORY INSTALLED CHECK VALVE. PRESSURE REGULATED TO 40 PSI (2.76 BAR). MP ROTATOR NOZZLE. T=TURQUOISE ADJ ARC 45-105 ON PRS40 BODY.
LST RST SST	ROTARY: HUNTER MP STRIP PROS-04-PRS40-CV TURF ROTATOR, 4" (10.16 CM) POP-UP WITH FACTORY INSTALLED CHECK VALVE. PRESSURE REGULATED TO 40 PSI (2.76 BAR). MP ROTATOR NOZZLE ON PRS40 BODY. LST=IVORY LEFT STRIP, SST=BROWN SIDE STRIP, RST=COPPER RIGHT STRIP.
M L O	ROTARY: HUNTER MP1000 PROS-04-PRS40-CV TURF ROTATOR, 4" (10.16 CM) POP-UP WITH CHECK VALVE, PRESSURE REGULATED TO 40 PSI (2.76 BAR). MP ROTATOR NOZZLE ON PRS40 BODY. M=MAROON ADJ ARC 90 TO 210, L=LIGHT BLUE 210 TO 270 ARC, O=OLIVE 360 ARC.
K G R	ROTARY: HUNTER MP2000 PROS-04-PRS40-CV TURF ROTATOR, 4" (10.16 CM) POP-UP WITH FACTORY INSTALLED CHECK VALVE. PRESSURE REGULATED TO 40 PSI (2.76 BAR). MP ROTATOR NOZZLE ON PRS40 BODY. K=BLACK ADJ ARC 90-210, G=GREEN ADJ ARC 210-270, R=RED 360 ARC.
B Y A	ROTARY: HUNTER MP3000 PROS-04-PRS40-CV TURF ROTATOR, 4" (10.16 CM) POP-UP WITH FACTORY INSTALLED CHECK VALVE. PRESSURE REGULATED TO 40 PSI (2.76 BAR). MP ROTATOR NOZZLE ON PRS40 BODY. B=BLUE ADJ ARC 90-210, Y=YELLOW ADJ ARC 210-270, A=GRAY 360 ARC.
LB	ROTARY: HUNTER MP3500 PROS-04-PRS40-CV TURF ROTATOR, 4.0" POP-UP WITH FACTORY INSTALLED CHECK VALVE. PRESSURE REGULATED TO 40 PSI. MP ROTATOR NOZZLE ON PRS40 BODY. LB=LIGHT BROWN ADJUSTABLE ARC, 90-210.
25 50 10 20	BUBBLER: HUNTER PROS-06-CV-PCN 10 FLOOD BUBBLER, ON FIXED RISER, 6.0" POP-UP, DRAIN CHECK VALVE

SYMBOL	MANUFACTURER/MODEL/DESCRIPTION
	DRIP VALVE: HUNTER ICZ-101-40 DRIP CONTROL ZONE KIT. 1" ICV GLOBE VALVE WITH 1" HY100 FILTER SYSTEM. PRESSURE REGULATION: 40PSI. FLOW RANGE: 2 GPM TO 20 GPM. 150 MESH STAINLESS STEEL SCREEN.
	DRIP VALVE: HUNTER ICZ-151-40 DRIP CONTROL ZONE KIT. 1-1/2" ICV GLOBE VALVE WITH 1" HY100 FILTER SYSTEM. PRESSURE REGULATION: 40PSI. FLOW RANGE: 20 GPM TO 60 GPM. 120 MESH STAINLESS STEEL SCREEN. 1-1/2" INLET X DUAL 1" OUTLETS. INSTALL DEODER FOR TWO WIRE INSTALLATION, PER MANUFACTURER'S RECOMENDATIONS.
DI	DRIP INDICATOR: HUNTER ECO-ID ECO-ID: 1/2" FPT CONNECTION WITH 12-60 PSI OPERATING PRESSURE. SPECIFY WITH HUNTER SJ SWING JOINT. INSTALL ONE INDICATOR FOR EACH DRIP VALVE.
	AREA TO RECEIVE DRIPLINE DRIP AREA: HUNTER HDL-04-12-CV HDL-04-12-CV: HUNTER DRIPLINE W/ 0.4 GPH EMITTERS AT 12" O.C. CHECK VALVE. DARK BROWN TUBING WITH TAN STRIPING. DRIPLINE LATERALS SPACED AT 12" APART, WITH EMITTERS OFFSET FOR TRIANGULAR PATTERN. INSTALL WITH HUNTER PLD BARBED OR PLD-LOC FITTINGS.

SYMBOL	MANUFACTURER/MODEL/DESCRIPTION
	REMOTE CONTROL VALVE: HUNTER ICV-G 1", 1-1/2", 2", AND 3" PLASTIC ELECTRIC REMOTE CONTROL VALVES, GLOBE CONFIGURATION, WITH NPT THREADED INLET/OUTLET, FOR COMMERCIAL/MUNICIPAL USE.
	SHUT OFF VALVE PVC SCHEULE 40 BALL VALVE, SLIP X SLIP
MV	MASTER VALVE: HUNTER ICV-G 1-1/2" 1", 1-1/2", 2", AND 3" PLASTIC ELECTRIC MASTER VALVE, GLOBE CONFIGURATION, WITH NPT THREADED INLET/OUTLET, FOR COMMERCIAL/MUNICIPAL USE.
BF	BACKFLOW: FEBCO 860, RPZ 1-1/2" REDUCED PRESSURE BACKFLOW PREVENTER
C	CONTROLLER: HUNTER HCC-800-M 8 STATION CONTROLLER WITH EZDM TWO-WIRE DECODER, WI-FI ENABLED, FULL-FUNCTIONING CONTROLLER WITH TOUCHSCREEN, METAL CABINET, MOUNTED INDOORS PER MANUFACTURER'S RECOMMENDATIONS.
R/F	RAIN/FREEZE SENSOR: HUNTER WR-CLIK RAIN SENSOR, INSTALL WITHIN 1000 FT OF CONTROLLER, IN LINE OF SIGHT. 22-28 VAC/VDC 100 MA POWER FROM TIMER TRANSFORMER. MOUNT AS NOTED.
M	WATER METER 1-1/2" ASSUMED STATIC WATER PRESSURE OF 68 PSI
	IRRIGATION LATERAL LINE: PVC CLASS 200 SDR 21
	IRRIGATION MAINLINE: PVC SCHEDULE 40 MAINLINE SIZE 3"
	PIPE SLEEVE: PVC SCHEDULE 40

Valve Callout

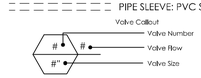

NORTH

GRAPHIC SCALE

0 20 40

1 inch = 20'

ASSUMED WATER PRESSURE OF 68 PSI. CONTRACTOR TO VERIFY PRESSURE BEFORE CONSTRUCTION AND NOTIFY IRRIGATOR BEFORE CONSTRUCTION IF PRESSURE IS LESS THAN 68 PSI.

REVISIONS

NO.	DATE	DESCRIPTION

DUNAWAY
118 Broadway • Suite 204 • San Antonio, Texas 78205
Tel: 210.267.5246
TBPELS: F-11142

muñoz
723 S. Flores • San Antonio, Texas 78204
210.349.1163 • www.munoz-co.com

IRRIGATION PLAN

WORLD HERITAGE CENTER
SAN ANTONIO, TEXAS

PRELIMINARY
FOR REVIEW ONLY
These documents are for Design Review and not intended for Construction, Bidding or Permit Purposes. They were prepared by, or under the supervision of:
Janel M. Moody
L.I.#20529
DATE: 11/22/2021

JOB NO.	5675.001
DESIGNED BY:	JMM
DRAWN BY:	JMM
CHECKED BY:	BKM
DATE:	12/01/2021
SHEET:	L5.01

FILE PATH: G:\Production\4000\5675\001\PLA\Drawings\95% CD\Plot Sheets\Production\4000\5600\5675\001\PLA\Drawings\95% CD\Plot Sheets\5675.001-Irrigation Plan

FILENAME: 5675.001-Irrigation Plan.dwg
PLOTTED BY: Dynaria Martinez
PLOTTED ON: Thursday, December 02, 2021
PLOTTED AT: 4:03:35 PM
PLOTTER NAME: DWG To PDF.pc3

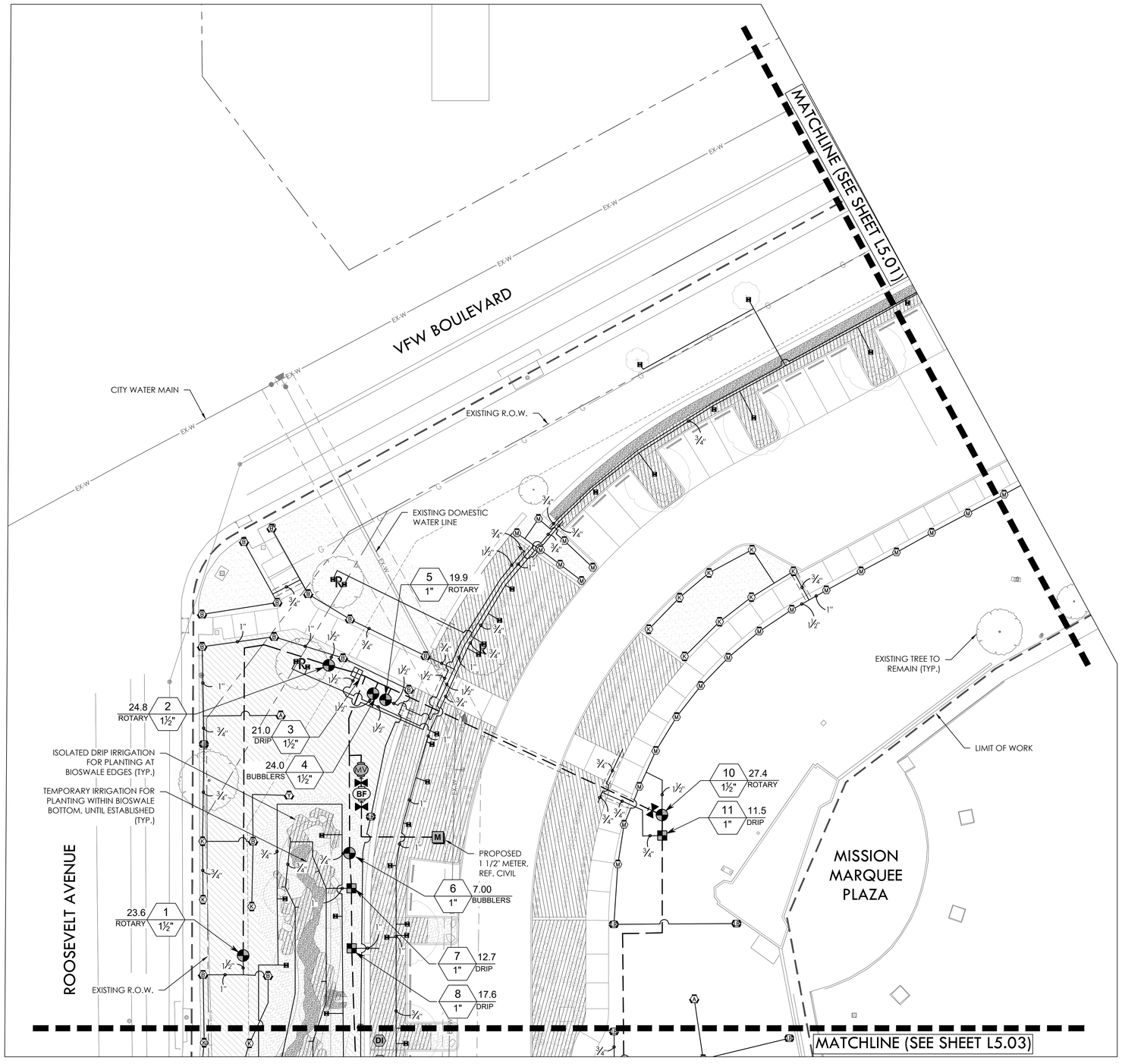

IRRIGATION SCHEDULE

SYMBOL	MANUFACTURER/MODEL/DESCRIPTION
T	ROTARY: HUNTER MP CORNER PROS-04-PRS40-CV TURF ROTATOR, 4" (10.16CM) POP-UP WITH FACTORY INSTALLED CHECK VALVE. PRESSURE REGULATED TO 40 PSI (2.76 BAR). MP ROTATOR NOZZLE. T=TURQUOISE ADJ ARC 45-105 ON PRS40 BODY.
LST RST SST	ROTARY: HUNTER MP STRIP PROS-04-PRS40-CV TURF ROTATOR, 4" (10.16 CM) POP-UP WITH FACTORY INSTALLED CHECK VALVE. PRESSURE REGULATED TO 40 PSI (2.76 BAR). MP ROTATOR NOZZLE ON PRS40 BODY. LST=IVORY LEFT STRIP, SST=BROWN SIDE STRIP, RST=COPPER RIGHT STRIP.
M L O	ROTARY: HUNTER MP1000 PROS-04-PRS40-CV TURF ROTATOR, 4" (10.16 CM) POP-UP WITH CHECK VALVE, PRESSURE REGULATED TO 40 PSI (2.76 BAR). MP ROTATOR NOZZLE ON PRS40 BODY. M=MAROON ADJ ARC 90 TO 210, L=LIGHT BLUE 210 TO 270 ARC, O=OLIVE 360 ARC.
K G R	ROTARY: HUNTER MP2000 PROS-04-PRS40-CV TURF ROTATOR, 4" (10.16 CM) POP-UP WITH FACTORY INSTALLED CHECK VALVE. PRESSURE REGULATED TO 40 PSI (2.76 BAR). MP ROTATOR NOZZLE ON PRS40 BODY. K=BLACK ADJ ARC 90-210, G=GREEN ADJ ARC 210-270, R=RED 360 ARC.
B Y A	ROTARY: HUNTER MP3000 PROS-04-PRS40-CV TURF ROTATOR, 4" (10.16 CM) POP-UP WITH FACTORY INSTALLED CHECK VALVE. PRESSURE REGULATED TO 40 PSI (2.76 BAR). MP ROTATOR NOZZLE ON PRS40 BODY. B=BLUE ADJ ARC 90-210, Y=YELLOW ADJ ARC 210-270, A=GRAY 360 ARC.
LB	ROTARY: HUNTER MP3500 PROS-04-PRS40-CV TURF ROTATOR, 4.0" POP-UP WITH FACTORY INSTALLED CHECK VALVE, PRESSURE REGULATED TO 40 PSI. MP ROTATOR NOZZLE ON PRS40 BODY. LB=LIGHT BROWN ADJUSTABLE ARC, 90-210.
25 50 10 20	BUBBLER: HUNTER PROS-06-CV-PCN 10 FLOOD BUBBLER, ON FIXED RISER, 6.0" POP-UP, DRAIN CHECK VALVE

SYMBOL	MANUFACTURER/MODEL/DESCRIPTION
	DRIP VALVE: HUNTER ICZ-101-40 DRIP CONTROL ZONE KIT. 1" ICV GLOBE VALVE WITH 1" HY100 FILTER SYSTEM. PRESSURE REGULATION: 40PSI. FLOW RANGE: 2 GPM TO 20 GPM. 150 MESH STAINLESS STEEL SCREEN.
	DRIP VALVE: HUNTER ICZ-151-40 DRIP CONTROL ZONE KIT. 1-1/2" ICV GLOBE VALVE WITH 1" HY100 FILTER SYSTEM. PRESSURE REGULATION: 40PSI. FLOW RANGE: 20 GPM TO 60 GPM. 120 MESH STAINLESS STEEL SCREEN. 1-1/2" INLET X DUAL 1" OUTLETS. INSTALL DEODER FOR TWO WIRE INSTALLATION, PER MANUFACTURER'S RECOMENDATIONS.
DI	DRIP INDICATOR: HUNTER ECO-ID ECO-ID: 1/2" FPT CONNECTION WITH 12-60 PSI OPERATING PRESSURE. SPECIFY WITH HUNTER SJ SWING JOINT. INSTALL ONE INDICATOR FOR EACH DRIP VALVE.
	AREA TO RECEIVE DRIPLINE DRIP AREA: HUNTER HDL-04-12-CV HDL-04-12-CV: HUNTER DRIPLINE W/ 0.4 GPH EMITTERS AT 12" O.C. CHECK VALVE, DARK BROWN TUBING WITH TAN STRIPING. DRIPLINE LATERALS SPACED AT 12" APART, WITH EMITTERS OFFSET FOR TRIANGULAR PATTERN. INSTALL WITH HUNTER PLD BARBED OR PLD-LOC FITTINGS.

SYMBOL	MANUFACTURER/MODEL/DESCRIPTION
	REMOTE CONTROL VALVE: HUNTER ICV-G 1", 1-1/2", 2", AND 3" PLASTIC ELECTRIC REMOTE CONTROL VALVES, GLOBE CONFIGURATION, WITH NPT THREADED INLET/OUTLET, FOR COMMERCIAL/MUNICIPAL USE.
	SHUT OFF VALVE PVC SCHEULE 40 BALL VALVE, SLIP X SLIP
MV	MASTER VALVE: HUNTER ICV-G 1-1/2" 1", 1-1/2", 2", AND 3" PLASTIC ELECTRIC MASTER VALVE. GLOBE CONFIGURATION, WITH NPT THREADED INLET/OUTLET, FOR COMMERCIAL/MUNICIPAL USE.
BF	BACKFLOW: FEBCO 860, RPZ 1-1/2" REDUCED PRESSURE BACKFLOW PREVENTER
C	CONTROLLER: HUNTER HCC-800-M 8 STATION CONTROLLER WITH EZDM TWO-WIRE DECODER. WI-FI ENABLED, FULL-FUNCTIONING CONTROLLER WITH TOUCHSCREEN. METAL CABINET. MOUNTED INDOORS PER MANUFACTURER'S RECOMMENDATIONS.
R/F	RAIN/FREEZE SENSOR: HUNTER WR-CLIK RAIN SENSOR. INSTALL WITHIN 1000 FT OF CONTROLLER, IN LINE OF SIGHT. 22-28 VAC/VDC 100 MA POWER FROM TIMER TRANSFORMER. MOUNT AS NOTED.
M	WATER METER 1-1/2" ASSUMED STATIC WATER PRESSURE OF 68 PSI
	IRRIGATION LATERAL LINE: PVC CLASS 200 SDR 21
	IRRIGATION MAINLINE: PVC SCHEDULE 40 MAINLINE SIZE 3"
	PIPE SLEEVE: PVC SCHEDULE 40

Valve Callout
Valve Number
Valve Flow
Valve Size

ASSUMED WATER PRESSURE OF 68 PSI. CONTRACTOR TO VERIFY PRESSURE BEFORE CONSTRUCTION AND NOTIFY IRRIGATOR BEFORE CONSTRUCTION IF PRESSURE IS LESS THAN 68 PSI.

NORTH

GRAPHIC SCALE
0 20 40
1 inch = 20'

NO.	DATE	REVISIONS DESCRIPTION

DUNAWAY
118 Broadway • Suite 204 • San Antonio, Texas 78205
Tel: 210.267.5246
TBPELS: F-11142

muñoz
723 S. Flores • San Antonio, Texas 78204
210.349.1163 • www.munoz-co.com

IRRIGATION PLAN

WORLD HERITAGE CENTER
SAN ANTONIO, TEXAS

PRELIMINARY
FOR REVIEW ONLY
These documents are for Design Review and not intended for Construction, Bidding or Permit Purposes. They were prepared by, or under the supervision of:
Janel M. Moody
L.I.#20529
DATE: 11/22/2021

JOB NO.	5675.001
DESIGNED BY:	JMM
DRAWN BY:	JMM
CHECKED BY:	BKM
DATE:	12/01/2021
SHEET:	L5.02

FILE PATH: G:\Projects\4000\05600\5675\001\PLA\Drawings\95% CD\Plot Sheets\G\Production\000\005600\5675\001\PLA\Drawings\95% CD\Plot Sheets\5675-001-Irrigation Plan

FILENAME: 5675.001-Irrigation Plan.dwg
PLOTTED BY: Damaris Alarcon
LAST SAVED: Thursday, November 02, 2021
PLOTTED ON: Nov 02, 2021
PLOTTED AT: 4:11:38 PM
PLOTTED WITH: DWG To PDF.pc3

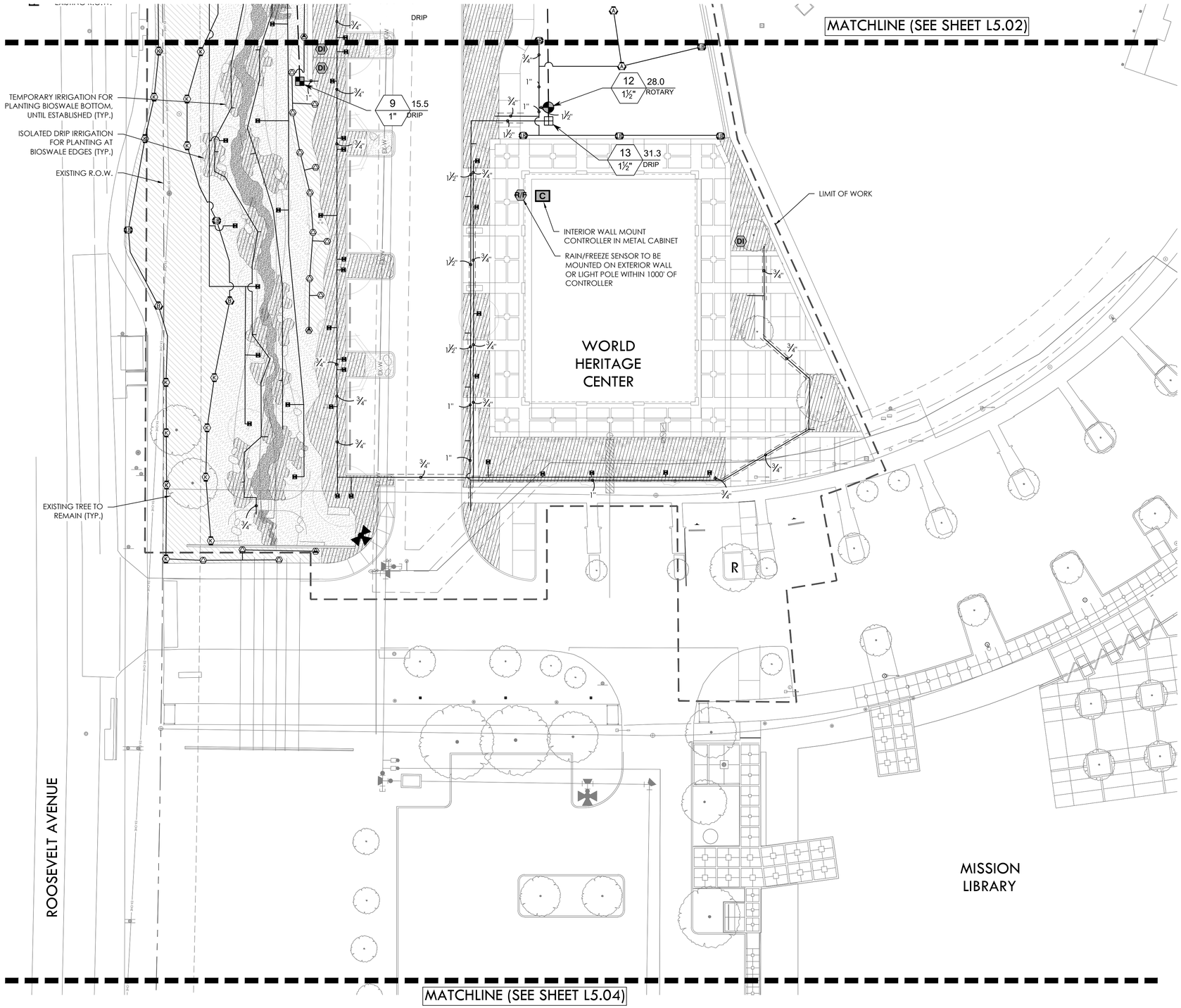

NORTH

GRAPHIC SCALE
0 20 40
1 inch = 20'

IRRIGATION SCHEDULE

SYMBOL	MANUFACTURER/MODEL/DESCRIPTION
T	ROTARY: HUNTER MP CORNER PROS-04-PRS40-CV TURF ROTATOR, 4" (10.16CM) POP-UP WITH FACTORY INSTALLED CHECK VALVE. PRESSURE REGULATED TO 40 PSI (2.76 BAR). MP ROTATOR NOZZLE. T=TURQUOISE ADJ ARC 45-105 ON PRS40 BODY.
LST RST SST	ROTARY: HUNTER MP STRIP PROS-04-PRS40-CV TURF ROTATOR, 4" (10.16 CM) POP-UP WITH FACTORY INSTALLED CHECK VALVE. PRESSURE REGULATED TO 40 PSI (2.76 BAR). MP ROTATOR NOZZLE ON PRS40 BODY. LST=IVORY LEFT STRIP. SST=BROWN SIDE STRIP, RST=COPPER RIGHT STRIP.
M L O	ROTARY: HUNTER MP1000 PROS-04-PRS40-CV TURF ROTATOR, 4" (10.16 CM) POP-UP WITH CHECK VALVE. PRESSURE REGULATED TO 40 PSI (2.76 BAR). MP ROTATOR NOZZLE ON PRS40 BODY. M=MAROON ADJ ARC 90 TO 210. L=LIGHT BLUE 210 TO 270 ARC. O=OLIVE 360 ARC.
K G R	ROTARY: HUNTER MP2000 PROS-04-PRS40-CV TURF ROTATOR, 4" (10.16 CM) POP-UP WITH FACTORY INSTALLED CHECK VALVE. PRESSURE REGULATED TO 40 PSI (2.76 BAR). MP ROTATOR NOZZLE ON PRS40 BODY. K=BLACK ADJ ARC 90-210. G=GREEN ADJ ARC 210-270. R=RED 360 ARC.
B Y A	ROTARY: HUNTER MP3000 PROS-04-PRS40-CV TURF ROTATOR, 4" (10.16 CM) POP-UP WITH FACTORY INSTALLED CHECK VALVE. PRESSURE REGULATED TO 40 PSI (2.76 BAR). MP ROTATOR NOZZLE ON PRS40 BODY. B=BLUE ADJ ARC 90-210. Y=YELLOW ADJ ARC 210-270. A=GRAY 360 ARC.
LB	ROTARY: HUNTER MP3500 PROS-04-PRS40-CV TURF ROTATOR, 4.0" POP-UP WITH FACTORY INSTALLED CHECK VALVE, PRESSURE REGULATED TO 40 PSI. MP ROTATOR NOZZLE ON PRS40 BODY. LB=LIGHT BROWN ADJUSTABLE ARC, 90-210.
25 50 10 20	BUBBLER: HUNTER PROS-06-CV-PCN 10 FLOOD BUBBLER, ON FIXED RISER, 6.0" POP-UP, DRAIN CHECK VALVE

SYMBOL	MANUFACTURER/MODEL/DESCRIPTION
	DRIP VALVE: HUNTER ICZ-101-40 DRIP CONTROL ZONE KIT. 1" ICV GLOBE VALVE WITH 1" HY100 FILTER SYSTEM. PRESSURE REGULATION: 40PSI. FLOW RANGE: 2 GPM TO 20 GPM. 150 MESH STAINLESS STEEL SCREEN.
	DRIP VALVE: HUNTER ICZ-151-40 DRIP CONTROL ZONE KIT. 1-1/2" ICV GLOBE VALVE WITH 1" HY100 FILTER SYSTEM. PRESSURE REGULATION: 40PSI. FLOW RANGE: 20 GPM TO 60 GPM. 120 MESH STAINLESS STEEL SCREEN. 1-1/2" INLET X DUAL 1" OUTLETS. INSTALL DECODER FOR TWO WIRE INSTALLATION, PER MANUFACTURER'S RECOMENDATIONS.
DI	DRIP INDICATOR: HUNTER ECO-ID ECO-ID: 1/2" FPT CONNECTION WITH 12-60 PSI OPERATING PRESSURE. SPECIFY WITH HUNTER SJ SWING JOINT. INSTALL ONE INDICATOR FOR EACH DRIP VALVE.
	AREA TO RECEIVE DRIPLINE DRIP AREA: HUNTER HDL-04-12-CV HDL-04-12-CV: HUNTER DRIPLINE W/ 0.4 GPH EMITTERS AT 12" O.C. CHECK VALVE. DARK BROWN TUBING WITH TAN STRIPING. DRIPLINE LATERALS SPACED AT 12" APART, WITH EMITTERS OFFSET FOR TRIANGULAR PATTERN. INSTALL WITH HUNTER PLD BARBED OR PLD-LOC FITTINGS.

SYMBOL	MANUFACTURER/MODEL/DESCRIPTION
	REMOTE CONTROL VALVE: HUNTER ICV-G 1", 1-1/2", 2", AND 3" PLASTIC ELECTRIC REMOTE CONTROL VALVES, GLOBE CONFIGURATION, WITH NPT THREADED INLET/OUTLET, FOR COMMERCIAL/MUNICIPAL USE.
	SHUT OFF VALVE PVC SCHEULE 40 BALL VALVE, SLIP X SLIP
MV	MASTER VALVE: HUNTER ICV-G 1-1/2" 1", 1-1/2", 2", AND 3" PLASTIC ELECTRIC MASTER VALVE, GLOBE CONFIGURATION, WITH NPT THREADED INLET/OUTLET, FOR COMMERCIAL/MUNICIPAL USE.
BF	BACKFLOW: FEBCO 860, RPZ 1-1/2" REDUCED PRESSURE BACKFLOW PREVENTER
C	CONTROLLER: HUNTER HCC-800-M 8 STATION CONTROLLER WITH EZDM TWO-WIRE DECODER. WI-FI ENABLED, FULL-FUNCTIONING CONTROLLER WITH TOUCHSCREEN. METAL CABINET, MOUNTED INDOORS PER MANUFACTURER'S RECOMMENDATIONS.
R/F	RAIN/FREEZE SENSOR: HUNTER WR-CLIK RAIN SENSOR, INSTALL WITHIN 1000 FT OF CONTROLLER, IN LINE OF SIGHT. 22-28 VAC/VDC 100 MA POWER FROM TIMER TRANSFORMER. MOUNT AS NOTED.
M	WATER METER 1-1/2" ASSUMED STATIC WATER PRESSURE OF 68 PSI
	IRRIGATION LATERAL LINE: PVC CLASS 200 SDR 21
	IRRIGATION MAINLINE: PVC SCHEDULE 40 MAINLINE SIZE 3"
	PIPE SLEEVE: PVC SCHEDULE 40

Valve Callout
Valve Number
Valve Flow
Valve Size

ASSUMED WATER PRESSURE OF 68 PSI. CONTRACTOR TO VERIFY PRESSURE BEFORE CONSTRUCTION AND NOTIFY IRRIGATOR BEFORE CONSTRUCTION IF PRESSURE IS LESS THAN 68 PSI.

REVISIONS

NO.	DATE	DESCRIPTION

DUNAWAY
118 Broadway • Suite 204 • San Antonio, Texas 78205
Tel: 210.267.5246
TBPELS: F-11142

muñoz
723 S. Flores • San Antonio, Texas 78204
210.349.1163 • www.munoz-co.com

IRRIGATION PLAN

WORLD HERITAGE CENTER
SAN ANTONIO, TEXAS

PRELIMINARY
FOR REVIEW ONLY
These documents are for Design Review and not intended for Construction, Bidding or Permit Purposes. They were prepared by, or under the supervision of: Janel M. Moody
L.I.#20529
DATE: 11/22/2021

JOB NO.	5675.001
DESIGNED BY:	JMM
DRAWN BY:	JMM
CHECKED BY:	BKM
DATE:	12/01/2021
SHEET:	L5.03

FILE PATH: G:\Production\4000\5000\5675\001\PA\Drawings\95% CD\Plot Sheets\Production\4000\5000\5675\001\PA\Drawings\95% CD\Plot Sheets\5675.001-Irrigation Plan
FILENAME: 5675.001-Irrigation Plan.dwg
PLOTTED BY: Damera Martinez
PLOTTED ON: Wednesday, December 02, 2021
PLOTTED AT: 1:15:20 PM
PLOTTED WITH: DWG to PDF.pc3

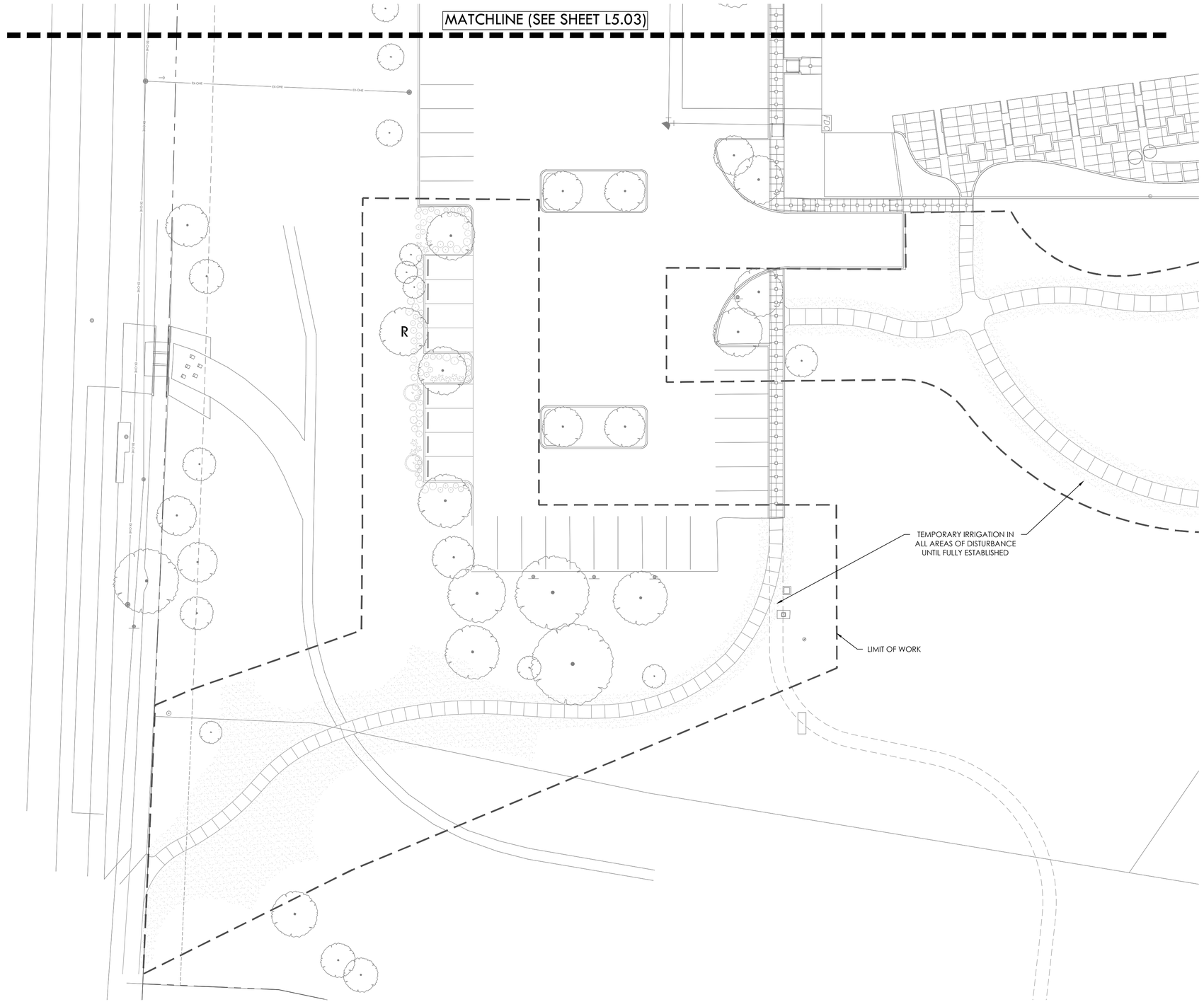

NORTH

GRAPHIC SCALE

0 20 40

1 inch = 20'

IRRIGATION SCHEDULE

SYMBOL	MANUFACTURER/MODEL/DESCRIPTION
T	ROTARY: HUNTER MP CORNER PROS-04-PRS40-CV TURF ROTATOR, 4" (10.16CM) POP-UP WITH FACTORY INSTALLED CHECK VALVE. PRESSURE REGULATED TO 40 PSI (2.76 BAR). MP ROTATOR NOZZLE. T=TURQUOISE ADJ ARC 45-105 ON PRS40 BODY.
LST RST SST	ROTARY: HUNTER MP STRIP PROS-04-PRS40-CV TURF ROTATOR, 4" (10.16 CM) POP-UP WITH FACTORY INSTALLED CHECK VALVE. PRESSURE REGULATED TO 40 PSI (2.76 BAR). MP ROTATOR NOZZLE ON PRS40 BODY. LST=IVORY LEFT STRIP. SST=BROWN SIDE STRIP. RST=COPPER RIGHT STRIP.
M L O	ROTARY: HUNTER MP1000 PROS-04-PRS40-CV TURF ROTATOR, 4" (10.16 CM) POP-UP WITH CHECK VALVE. PRESSURE REGULATED TO 40 PSI (2.76 BAR). MP ROTATOR NOZZLE ON PRS40 BODY. M=MAROON ADJ ARC 90 TO 210. L=LIGHT BLUE 210 TO 270 ARC. O=OLIVE 360 ARC.
K G R	ROTARY: HUNTER MP2000 PROS-04-PRS40-CV TURF ROTATOR, 4" (10.16 CM) POP-UP WITH FACTORY INSTALLED CHECK VALVE. PRESSURE REGULATED TO 40 PSI (2.76 BAR). MP ROTATOR NOZZLE ON PRS40 BODY. K=BLACK ADJ ARC 90-210. G=GREEN ADJ ARC 210-270. R=RED 360 ARC.
B Y A	ROTARY: HUNTER MP3000 PROS-04-PRS40-CV TURF ROTATOR, 4" (10.16 CM) POP-UP WITH FACTORY INSTALLED CHECK VALVE. PRESSURE REGULATED TO 40 PSI (2.76 BAR). MP ROTATOR NOZZLE ON PRS40 BODY. B=BLUE ADJ ARC 90-210. Y=YELLOW ADJ ARC 210-270. A=GRAY 360 ARC.
LB	ROTARY: HUNTER MP3500 PROS-04-PRS40-CV TURF ROTATOR, 4.0" POP-UP WITH FACTORY INSTALLED CHECK VALVE. PRESSURE REGULATED TO 40 PSI. MP ROTATOR NOZZLE ON PRS40 BODY. LB=LIGHT BROWN ADJUSTABLE ARC, 90-210.
25 50 10 20	BUBBLER: HUNTER PROS-06-CV-PCN 10 FLOOD BUBBLER, ON FIXED RISER, 6.0" POP-UP, DRAIN CHECK VALVE

SYMBOL	MANUFACTURER/MODEL/DESCRIPTION
	DRIP VALVE: HUNTER ICZ-101-40 DRIP CONTROL ZONE KIT. 1" ICV GLOBE VALVE WITH 1" HY100 FILTER SYSTEM. PRESSURE REGULATION: 40PSI. FLOW RANGE: 2 GPM TO 20 GPM. 150 MESH STAINLESS STEEL SCREEN.
	DRIP VALVE: HUNTER ICZ-151-40 DRIP CONTROL ZONE KIT. 1-1/2" ICV GLOBE VALVE WITH 1" HY100 FILTER SYSTEM. PRESSURE REGULATION: 40PSI. FLOW RANGE: 20 GPM TO 60 GPM. 120 MESH STAINLESS STEEL SCREEN. 1-1/2" INLET X DUAL 1" OUTLETS. INSTALL DECODER FOR TWO WIRE INSTALLATION, PER MANUFACTURER'S RECOMENDATIONS.
DI	DRIP INDICATOR: HUNTER ECO-ID ECO-ID: 1/2" FPT CONNECTION WITH 12-60 PSI OPERATING PRESSURE. SPECIFY WITH HUNTER SJ SWING JOINT. INSTALL ONE INDICATOR FOR EACH DRIP VALVE.
	AREA TO RECEIVE DRIPLINE DRIP AREA: HUNTER HDL-04-12-CV HDL-04-12-CV: HUNTER DRIPLINE W/ 0.4 GPH EMITTERS AT 12" O.C. CHECK VALVE, DARK BROWN TUBING WITH TAN STRIPING. DRIPLINE LATERALS SPACED AT 12" APART, WITH EMITTERS OFFSET FOR TRIANGULAR PATTERN. INSTALL WITH HUNTER PLD BARBED OR PLD-LOC FITTINGS.

SYMBOL	MANUFACTURER/MODEL/DESCRIPTION
	REMOTE CONTROL VALVE: HUNTER ICV-G 1", 1-1/2", 2", AND 3" PLASTIC ELECTRIC REMOTE CONTROL VALVES, GLOBE CONFIGURATION, WITH NPT THREADED INLET/OUTLET, FOR COMMERCIAL/MUNICIPAL USE.
	SHUT OFF VALVE PVC SCHEULE 40 BALL VALVE, SLIP X SLIP
MV	MASTER VALVE: HUNTER ICV-G 1-1/2" 1", 1-1/2", 2", AND 3" PLASTIC ELECTRIC MASTER VALVE, GLOBE CONFIGURATION, WITH NPT THREADED INLET/OUTLET, FOR COMMERCIAL/MUNICIPAL USE.
BF	BACKFLOW: FEBCO 860, RPZ 1-1/2" REDUCED PRESSURE BACKFLOW PREVENTER
C	CONTROLLER: HUNTER HCC-800-M 8 STATION CONTROLLER WITH EZDM TWO-WIRE DECODER. WI-FI ENABLED, FULL-FUNCTIONING CONTROLLER WITH TOUCHSCREEN. METAL CABINET, MOUNTED INDOORS PER MANUFACTURER'S RECOMMENDATIONS.
R/F	RAIN/FREEZE SENSOR: HUNTER WR-CLIK RAIN SENSOR, INSTALL WITHIN 1000 FT OF CONTROLLER, IN LINE OF SIGHT. 22-28 VAC/VDC 100 MA POWER FROM TIMER TRANSFORMER. MOUNT AS NOTED.
M	WATER METER 1-1/2" ASSUMED STATIC WATER PRESSURE OF 68 PSI
	IRRIGATION LATERAL LINE: PVC CLASS 200 SDR 21
	IRRIGATION MAINLINE: PVC SCHEDULE 40 MAINLINE SIZE 3"
	PIPE SLEEVE: PVC SCHEDULE 40

Valve Callout

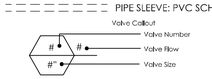

ASSUMED WATER PRESSURE OF 68 PSI. CONTRACTOR TO VERIFY PRESSURE BEFORE CONSTRUCTION AND NOTIFY IRRIGATOR BEFORE CONSTRUCTION IF PRESSURE IS LESS THAN 68 PSI.

REVISIONS

NO.	DATE	DESCRIPTION

DUNAWAY
118 Broadway • Suite 204 • San Antonio, Texas 78205
Tel: 210.267.5246
TBPELS: F-11142

muñoz
723 S. Flores • San Antonio, Texas 78204
210.349.1163 • www.munoz-co.com

IRRIGATION PLAN

WORLD HERITAGE CENTER
SAN ANTONIO, TEXAS

PRELIMINARY
FOR REVIEW ONLY
These documents are for Design Review and not intended for Construction, Bidding or Permit Purposes. They were prepared by, or under the supervision of:
Janel M. Moody
L.I.#20529
DATE: 11/22/2021

JOB NO.	5675.001
DESIGNED BY:	JMM
DRAWN BY:	JMM
CHECKED BY:	BKM
DATE:	12/01/2021
SHEET:	L5.04

FILE PATH: G:\Production\4000\5675\001\PLA\Drawings\95% CD\Plot Sheets\5675.001 Irrigation Plan

FILENAME: 5675.001 Irrigation Plan.dwg
PLOTTED BY: Dunaway Martinez
PLOTTED ON: Thursday December 02, 2021
PLOTTED AT: 4:11:46 PM
PLOTTER NAME: DWG To PDF.pc3

IRRIGATION NOTES:

1. IRRIGATION PLAN IS SCHEMATIC. ALL PIPING HEADS, VALVES, ETC. SHALL BE LOCATED AS SHOWN ON THE DETAILS. REPORT ANY DISCREPANCIES BETWEEN ACTUAL AND PROPOSED SITE CONDITIONS TO THE OWNER. DO NOT PROCEED WITH WORK UNTIL SAID DISCREPANCIES ARE RESOLVED.

2. VERIFY THAT THE WORK OF OTHER CONTRACTORS/TRADES IS SUFFICIENTLY COMPLETE TO ALLOW COMMENCEMENT OF IRRIGATION INSTALLATION PRIOR TO BEGINNING OF WORK. CONTRACTORS SHALL COORDINATE INSTALLATION OF ALL IRRIGATION SLEEVES UNDER PAVEMENT WITH OTHER CONTRACTORS.

3. COORDINATE IRRIGATION INSTALLATION WITH THE WORK OF OTHER CONTRACTORS/TRADES AND PROTECT THE WORK OF OTHER CONTRACTOR/TRADES. IRRIGATION CONTRACTOR IS RESPONSIBLE FOR ALL DAMAGES RESULTING FROM HIS ACTIONS.

4. THE IRRIGATION CONTRACTOR SHALL PROVIDE THE OWNER WITH TWO COPIES OF THE PARTS LIST AND MANUFACTURER'S CATALOG SHOWING PERFORMANCE, QUALITY AND FUNCTION OF EACH ITEM OF EQUIPMENT IN THE SYSTEM. IN ADDITION, THE IRRIGATION CONTRACTOR SHALL PROVIDE THE OWNER WRITTEN INSTRUCTIONS FOR OPERATION AND MAINTENANCE OF THE SYSTEM.

5. PRIOR TO THE ACCEPTANCE OF IRRIGATION SYSTEM BY OWNER, A PERSON QUALIFIED TO REPRESENT THE IRRIGATION CONTRACTOR SHALL BE PRESENT AT THE FINAL INSPECTION TO DEMONSTRATE THE SYSTEM AND PROVE ITS PERFORMANCE PRIOR TO THE INSPECTION. ALL WORK SHALL HAVE BEEN COMPLETED, TESTED, ADJUSTED, AND PLACED IN OPERATION.

6. WORK MUST BE GUARANTEED FOR TWO YEARS.

7. IRRIGATION SYSTEM INSTALLATION TO BE PERFORMED IN ACCORDANCE WITH ALL PERTINENT CODES AND ORDINANCES.

8. NO PVC PIPING SHALL BE LOCATED UNDER TREE ROOTBALLS.

9. THE CONTRACTOR SHALL VERIFY LOCATION OF ALL UNDERGROUND UTILITIES PRIOR TO INSTALLATION. IF ANY UNDERGROUND OR ABOVE GROUND CONSTRUCTION IS LOCATED AS TO SIGNIFICANTLY HINDER INSTALLATION OR FUNCTION OF THE IRRIGATION SYSTEM, THE OWNER SHALL BE NOTIFIED IMMEDIATELY.

10. MAIN LINE PIPING AND LATERAL PIPING MAY BE PLACED IN SAME TRENCH WHEN POSSIBLE. MAIN LINE PIPING SHALL BE INSTALLED IN BOTTOM OF TRENCH WITH LATERALS ON TOP.

11. SLEEVES SHALL BE INSTALLED WHEREVER PIPES RUN UNDER PAVEMENT. SLEEVES SHALL BE SCH 40 AND A MINIMUM OF TWO PIPE SIZES LARGER THAN THE PIPE.

12. THE CONTRACTOR IS RESPONSIBLE FOR COORDINATING ELECTRICAL POWER TO ALL CONTROLLERS.

13. PRIOR TO BEGINNING OF WORK, CONTRACTOR SHALL VERIFY MINIMUM STATIC PRESSURE AT THE POINT OF CONNECTION OF <<68>> PSI. IF THE STATIC PRESSURE IS LESS THAN <<68>> PSI AT THE POINT OF CONNECTION, STOP WORK, NOTIFY ENGINEER AND DO NOT PROCEED UNTIL INSTRUCTED BY ENGINEER.

14. ATTACH A PREPRINTED, HEAVY DUTY PLASTIC SERIALIZED TAG TO EACH CONTROL VALVE WITH ITS ASSOCIATED CONTROLLER STATION NUMBER. TAGS SHOULD BE AS SUPPLIED BY RAINBIRD OR APPROVED EQUAL.

15. THE PIPE SHOWN IN PAVED AREAS WITHOUT SLEEVES IS SHOWN IN THESE AREAS FOR PURPOSE OF DRAWING CLARITY. PIPE TO BE IN NEAREST UNPAVED LOCATION.

16. THE IRRIGATION CONTROLLER(S) SHALL BE EQUIPPED WITH RAIN/FREEZE SENSOR(S). MOUNT THE TRANSMITTER(S) IN AN OPEN AREA AS DIRECTED BY THE OWNER.

17. ALL BACKFLOW INSTALLATIONS AND CONNECTIONS TO CITY WATER LINES MUST BE PERMITTED SEPARATELY BY THE CITY INSPECTION STAFF.

18. THE IRRIGATION SYSTEM SHALL BE MAINTAINED IN ITS PROPER WORKING ORDER DURING THE 2 YEAR MAINTENANCE PERIOD.

19. ALL WIRING SHALL BE RATED FOR DIRECT BURIAL.

DRIP NOTES:

1. AIR RELIEF VALVE TO BE PLACED AT HIGH POINT IN BED.

2. FLUSH VALVE TO BE PLACED AT LOW POINT IN BED ON EXHAUST LINE.

3. THESE LAYOUTS ARE TYPICAL AND ARE SUBJECT TO CHANGE DUE TO SITE CONDITIONS SUCH AS GRADING.

4. IRRIGATION LATERAL LINES FEED SUPPLY HEADERS.

INSPECTION NOTES:

1. HEADS SHALL NOT SPRAY ON IMPERVIOUS SURFACES.

2. HEADS SHALL NOT SPRAY ON WALLS OR FENCES.

3. HEADS SHALL NOT BE CLOSER THAN 4 INCHES OF THE EDGE OF HARDSCAPE.

4. NO DRINKING DOMESTIC USES ALLOWED ON IRRIGATION LINES, NO SWIMMING POOL USE OR FOUNTAINS.

5. CONTRACTOR SHALL COMPLY WITH ALL INSPECTION REQUIREMENTS OF THE MUNICIPALITY.

6. FOR FINAL INSPECTION, IRRIGATOR'S REPRESENTATIVE MUST BE PRESENT.

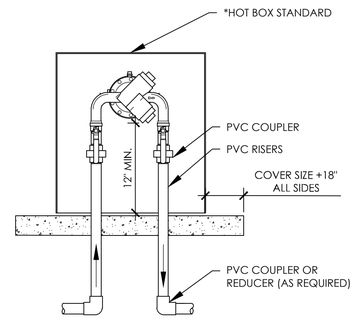

*HOT BOX NOTES:
1. HOT BOX SHALL BE OF A SIZE TO ACCOMMODATE SPECIFIED CLEARANCES.
2. CONTRACTOR SHALL BE RESPONSIBLE FOR PROVIDING POWER TO HOT BOX ELECTRICAL RECEPTACLE.
3. INSTALL WIRING PER LOCAL CODE.
4. INSTALL PER MANUFACTURERS INSTRUCTIONS.

A REDUCED PRESSURE ZONE ASSEMBLY
SCALE: NTS

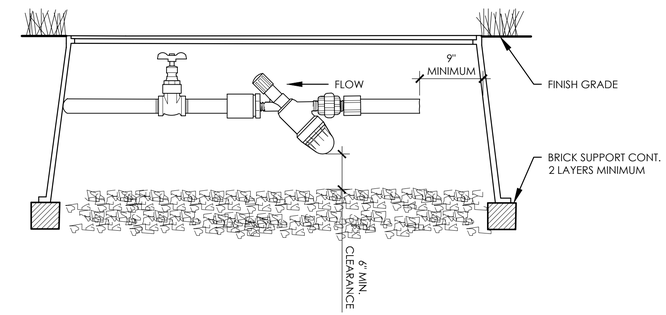

B WYE STRAINER
SCALE: NTS

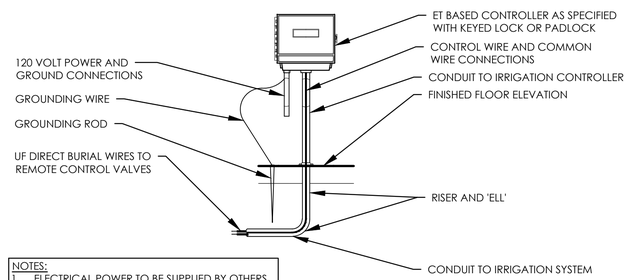

NOTES:
1. ELECTRICAL POWER TO BE SUPPLIED BY OTHERS.
2. ALL WIRING TO BE INSTALLED PER LOCAL CODES.
3. SEE ELECTRICAL PLANS FOR EXACT LOCATION OF CONTROLLER.
4. CONTROLLER TO BE MOUNTED APPROXIMATELY 5'-0" ABOVE FINISHED FLOOR ELEVATION.

C WALL MOUNT CONTROLLER
SCALE: NTS

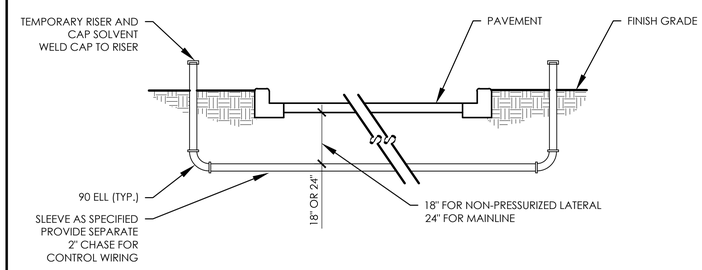

D SLEEVE INSTALLATION
SCALE: NTS

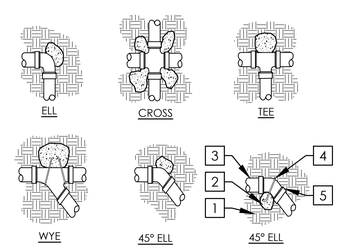

NOTES:
1. SUPPLY LINES 2-1/2" IN DIAMETER OR LARGER SHALL RECEIVE CONCRETE THRUST BLOCKS.
2. SEE SPECIFICATIONS FOR AMOUNT OF CONCRETE TO BE USED FOR THRUST BLOCK.

1. UNDISTURBED SOIL (TYP.)
2. CONCRETE THRUST BLOCK (TYP.)
3. PIPE (TYP.)
4. REBAR BENT AROUND FITTING (TYP.)
5. FITTING (TYP.)

E THRUST BLOCK
SCALE: NTS

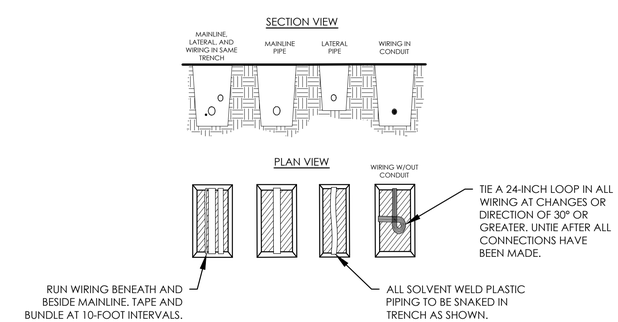

NOTES:
1. SLEEVE BELOW ALL HARDSCAPE ELEMENTS WITH SCHEDULE 40 PVC PIPE, TWICE THE DIAMETER OF THE PIPE OR WIRE BUNDLE WITHIN.
2. FOR PIPE AND WIRE BURIAL DEPTHS, SEE SPECIFICATIONS.
3. CONTROLLER WIRE BURIED WITHOUT CONDUIT SHALL BE RATED FOR DIRECT BURIAL.

F PIPE AND WIRE TRENCHING
SCALE: NTS

REVISIONS

NO.	DATE	DESCRIPTION

IRRIGATION NOTES & DETAILS

WORLD HERITAGE CENTER
SAN ANTONIO, TEXAS

DUNAWAY
1118 Broadway • Suite 204 • San Antonio, Texas 78205
Tel: 210.267.0246
TBPELS F-11149

muñoz
723 S. Flores • San Antonio, Texas 78204
210.349.1163 • www.munoz-co.com

PRELIMINARY
FOR REVIEW ONLY
These documents are for Design Review and not intended for Construction, Bidding or Permit Purposes. They were prepared by, or under the supervision of:
Janel M. Moody
L.I.#20529
DATE: 11/22/2021

JOB NO.	5675.001
DESIGNED BY:	JMM
DRAWN BY:	JMM
CHECKED BY:	BKM
DATE:	12/01/2021
SHEET:	L5.05

FILE PATH: G:\Production\4000\5650\5675\001\PLA\Drawings\95% CD\Plot Sheets\5675-001-Irrigation Plan
FILENAME: 5675-001-Irrigation Plan.dwg
PLOTTED BY: Dreana Martinez
LAST SAVED: Thursday, November 02, 2021
PLOTTED ON: 4:14:17 PM
PLOTTER NAME: DWG To PDF.pc3

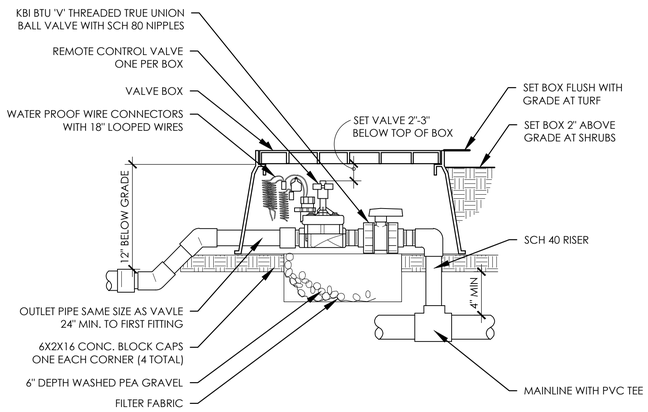

A **ELECTRIC REMOTE CONTROL VALVE** SCALE: NTS

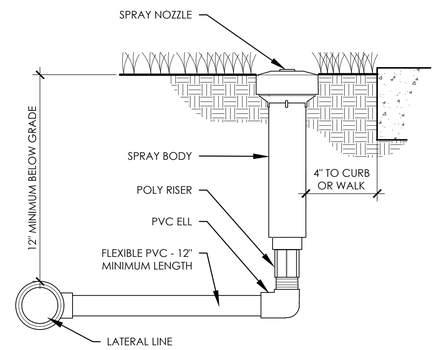

B **ROTARY SPRAY HEAD** SCALE: NTS

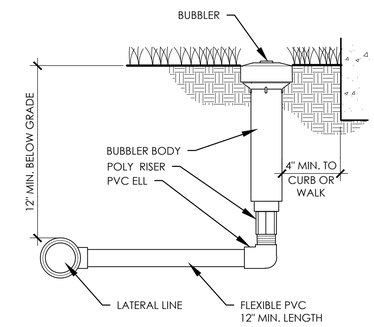

C **POP UP BUBBLER** SCALE: NTS

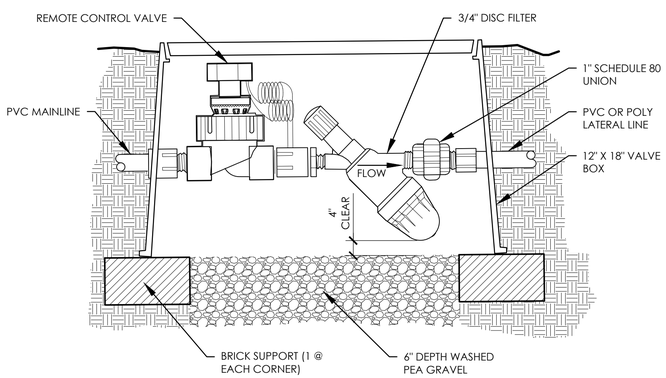

D **DRIP REMOTE CONTROL VALVE** SCALE: NTS

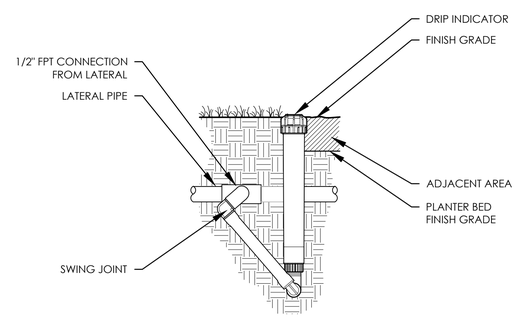

E **DRIP INDICATOR ON SWING JOINT** SCALE: NTS

NOTES:
1. PLACE TIE DOWN STAKES EVERY THREE FEET IN SAND, F0UR FEET IN LOAM, AND FIVE FEET IN CLAY.
2. AT FITTINGS WHERE THERE IS A CHANGE OF DIRECTION SUCH AS TEES OR ELBOWS, USE TIE-DOWN STAKES ON EACH LEG OF THE CHANGE OF DIRECTION.

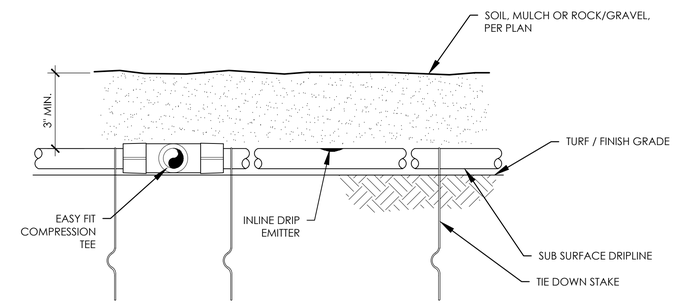

F **DRIP TUBING INSTALLATION** SCALE: NTS

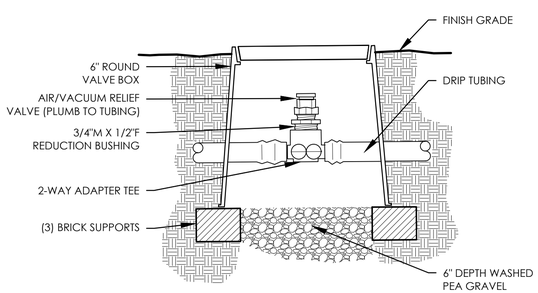

G **DRIP AIR/VACUUM RELIEF VALVE** SCALE: NTS

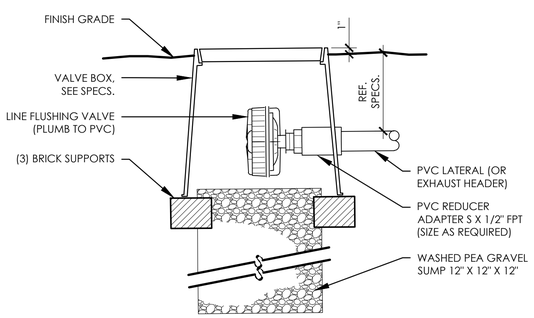

H **DRIP LINE FLUSHING VALVE** SCALE: NTS

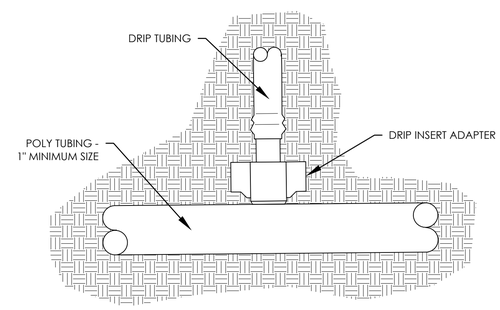

I **DRIP START CONNECTION** SCALE: NTS

NO.	DATE	DESCRIPTION

REVISIONS

IRRIGATION NOTES & DETAILS

WORLD HERITAGE CENTER
SAN ANTONIO, TEXAS

DUNAWAY
118 Broadway • Suite 204 • San Antonio, Texas 78205
Tel: 210.267.5246
TBPELS: F-11142

muñoz
723 S. Flores • San Antonio, Texas 78204
210.349.1163 • www.munoz-co.com

PRELIMINARY
FOR REVIEW ONLY
These documents are for Design Review and not intended for Construction, Bidding or Permit Purposes. They were prepared by, or under the supervision of:
Janel M. Moody
L.I.#20529
DATE: 11/22/2021

JOB NO.	5675.001
DESIGNED BY:	JMM
DRAWN BY:	JMM
CHECKED BY:	BKM
DATE:	12/01/2021
SHEET:	L5.05

FILE PATH: G:\Production\4000\5650\5675\001\PLA\Drawings\95% CD\Plot Sheets\G\Production\4000\5650\5675\001\PLA\Drawings\95% CD\Plot Sheets\5675-001-Irrigation Plan

FILENAME: 5675-001-Irrigation Plan.dwg
PLOTTED BY: Dawana Martinez
PLOTTED ON: Thursday, December 02, 2021
PLOTTED AT: 4:14:46 PM
PLOTTER NAME: DWG To PDF.pc3

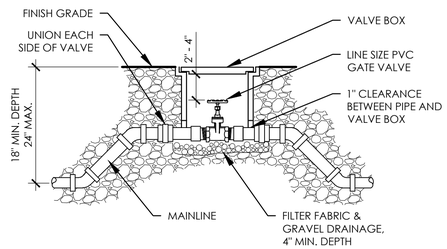

A MANUAL ISOLATION VALVE

SCALE: NTS

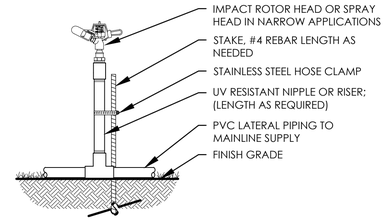

NOTES:
1. TEMPORARY IRRIGATION SYSTEM SHALL BE INSTALLED BY A TEXAS STATE LICENSED IRRIGATOR.
2. ALL COVERAGE SHALL BE HEAD TO HEAD.
3. SYSTEM SHALL BE DESIGNED TO AVOID ANY OVERSPRAY ONTO SIDEWALKS AND STREETS.
4. TEMPORARY IRRIGATION SYSTEM ZONE VALVES SHALL BE HUNTER NODE CONTROLLER, CONTRACTOR SHALL CLUSTER VALVE LOCATIONS WHERE POSSIBLE TO COMBINE ZONES ON MULTIPLE VALVE CONTROLLERS (NODE-200, NODE-400, ETC...)
5. CONTRACTOR SHALL VERIFY ON-SITE AND BY CONSULTING WITH LANDSCAPE ARCHITECT AREAS THAT WILL REQUIRE TEMPORARY IRRIGATION PRIOR TO INSTALLATION OF SYSTEM.
6. USE #4 REBAR ROD TO HOLD PIPE SECURELY IN PLACE. INSTALL AT INTERVALS AS REQUIRED TO SECURE ROTOR HEADS.

B LARGE TURF AREA TEMP. HEAD

SCALE: NTS

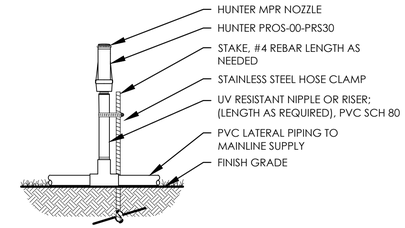

NOTES:
1. TEMPORARY IRRIGATION SYSTEM SHALL BE DESIGNED BY A TEXAS STATE LICENSED IRRIGATOR AND SHALL BE SUBMITTED FOR APPROVAL BY THE LANDSCAPE ARCHITECT PRIOR TO INSTALLATION.
2. ALL COVERAGE SHALL BE HEAD TO HEAD.
3. SYSTEM SHALL BE DESIGNED TO AVOID ANY OVERSPRAY ONTO SIDEWALKS AND STREETS.
4. TEMPORARY IRRIGATION SYSTEM ZONE VALVES SHALL BE HUNTER NODE CONTROLLER VALVES, CONTRACTOR SHALL CLUSTER VALVE LOCATIONS WHERE POSSIBLE TO COMBINE ZONES ON MULTIPLE VALVE CONTROLLERS (NODE-200, NODE-400, ETC...)
5. NO PIPING SHALL BE RUN WITHIN THE PROTECTION ZONE OF EXISTING TREES UNLESS APPROVED BY LANDSCAPE ARCHITECT.
6. CONTRACTOR SHALL VERIFY ON-SITE AND BY CONSULTING WITH LANDSCAPE ARCHITECT AREAS THAT WILL REQUIRE TEMPORARY IRRIGATION PRIOR TO DESIGN AND INSTALLATION OF SYSTEM.
7. USE #4 X 24" REBAR ROD WITH "J" HOOKED RADIUS AT ONE END TO HOLD PIPE SECURELY IN PLACE. INSTALL AT INTERVALS OF 10 FEET.

C SMALL TURF AREA TEMP. HEAD

SCALE: NTS

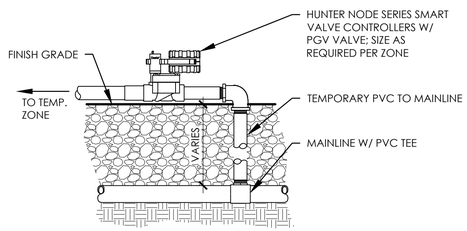

D TEMPORARY CONTROLLER/VALVE

SCALE: NTS

VALVE SCHEDULE

NUMBER	MODEL	SIZE	TYPE	GPM	DESIGN PSI	FRICTION LOSS	VALVE LOSS	PSI	PSI @ POC	PRECIP
1	DRIP VALVE: HUNTER ICZ-151-40	1-1/2"	AREA FOR DRIPLINE	20.99	15	1.39	11.2	27.58	41.95	0.64 in/h
2	REMOTE CONTROL VALVE: HUNTER ICV-G	1-1/2"	BUBBLER	24.00	20	8.67	1.5	30.16	44.88	1.77 in/h
3	REMOTE CONTROL VALVE: HUNTER ICV-G	1-1/2"	TURF ROTARY	23.06	40	11.33	1.5	52.83	67.43	0.31 in/h
4	REMOTE CONTROL VALVE: HUNTER ICV-G	1"	BUBBLER	7.00	20	1.08	2.7	23.78	36.38	1.7 in/h
5	DRIP VALVE: HUNTER ICZ-101-40	1"	AREA FOR DRIPLINE	12.74	15	2.85	21.93	39.77		0.65 in/h
6	DRIP VALVE: HUNTER ICZ-101-40	1"	AREA FOR DRIPLINE	17.52	15	0.07	35.58	50.65	64.5	0.64 in/h
7	REMOTE CONTROL VALVE: HUNTER ICV-G	1-1/2"	TURF ROTARY	22.40	40	6.19	1.5	47.69	62.29	0.28 in/h
8	DRIP VALVE: HUNTER ICZ-101-40	1"	AREA FOR DRIPLINE	11.51	15	0.8	19.72	35.52	48.4	0.64 in/h
9	DRIP VALVE: HUNTER ICZ-151-40	1-1/2"	AREA FOR DRIPLINE	17.91	15	0.06	11	26.06	40.02	0.65 in/h
10	REMOTE CONTROL VALVE: HUNTER ICV-G	1-1/2"	TURF ROTARY	28.91	40	1.44	1.5	42.94	58.46	0.37 in/h
11	DRIP VALVE: HUNTER ICZ-151-40	1-1/2"	AREA FOR DRIPLINE	23.83	15	5.68	11.77	32.44	47.3	0.64 in/h

CRITICAL ANALYSIS

Generated:	2021-11-18 06:22
P.O.C. NUMBER: 01	
Water Source Information:	ASSUMED STATIC WATER PRESSURE OF 68 PSI
FLOW AVAILABLE	
Water Meter Size:	1-1/2"
Flow Available:	40.32 gpm
PRESSURE AVAILABLE	
Static Pressure at POC:	68.00 PSI
Elevation Change:	0.00 ft
Service Line Size:	1 1/2"
Length of Service Line:	0 ft
Pressure Available:	68.00 psi
DESIGN ANALYSIS	
Maximum Station Flow:	28.91 gpm
Flow Available at POC:	40.32 gpm
Residual Flow Available:	11.41 gpm
Critical Station:	3
Design Pressure:	40.00 psi
Friction Loss:	10.30 psi
Fittings Loss:	1.03 psi
Elevation Loss:	0.00 psi
Loss through Valve:	1.50 psi
Pressure Req. at Critical Station:	52.82 psi
Loss for Fittings:	0.01 psi
Loss for Main Line:	0.06 psi
Loss for POC to Valve Elevation:	0.00 psi
Loss for Backflow:	11.93 psi
Loss for Master Valve:	1.50 psi
Loss for Water Meter:	1.11 psi
Critical Station Pressure at POC:	67.43 psi
Pressure Available:	68.00 psi
Residual Pressure Available:	0.57 psi

NO.	DATE	DESCRIPTION
REVISIONS		

TEMPORARY IRRIGATION DETAILS

WORLD HERITAGE CENTER
SAN ANTONIO, TEXAS

DUNAWAY
118 Broadway • Suite 204 • San Antonio, Texas 78205
Tel: 210.267.5246
TBPELS: F-11142

muñoz
723 S. Flores • San Antonio, Texas 78204
210.349.1163 • www.munoz-co.com

PRELIMINARY
FOR REVIEW ONLY
These documents are for Design Review and not intended for Construction, Bidding or Permit Purposes. They were prepared by, or under the supervision of:
Janel M. Moody
L.I.#20529
DATE: 11/22/2021

JOB NO.	5675.001
DESIGNED BY:	JMM
DRAWN BY:	JMM
CHECKED BY:	BKM
DATE:	12/01/2021
SHEET:	L5.06

FILE PATH: G:\Production\40000\50600\56675\001\PA\Drawings\95%_CD\Plot Sheets\Production\40000\50600\56675\001\PA\Drawings\95%_CD\Plot Sheets\5675.001-Irrigation Plan

FILENAME: 5675.001-Irrigation Plan.dwg
PLOTTED BY: Dunaway Martinez
PLOTTED ON: Thursday, December 02, 2021
PLOTTED AT: 4:15:25 PM
PLOTTED WITH: DWG to PDF.pc3

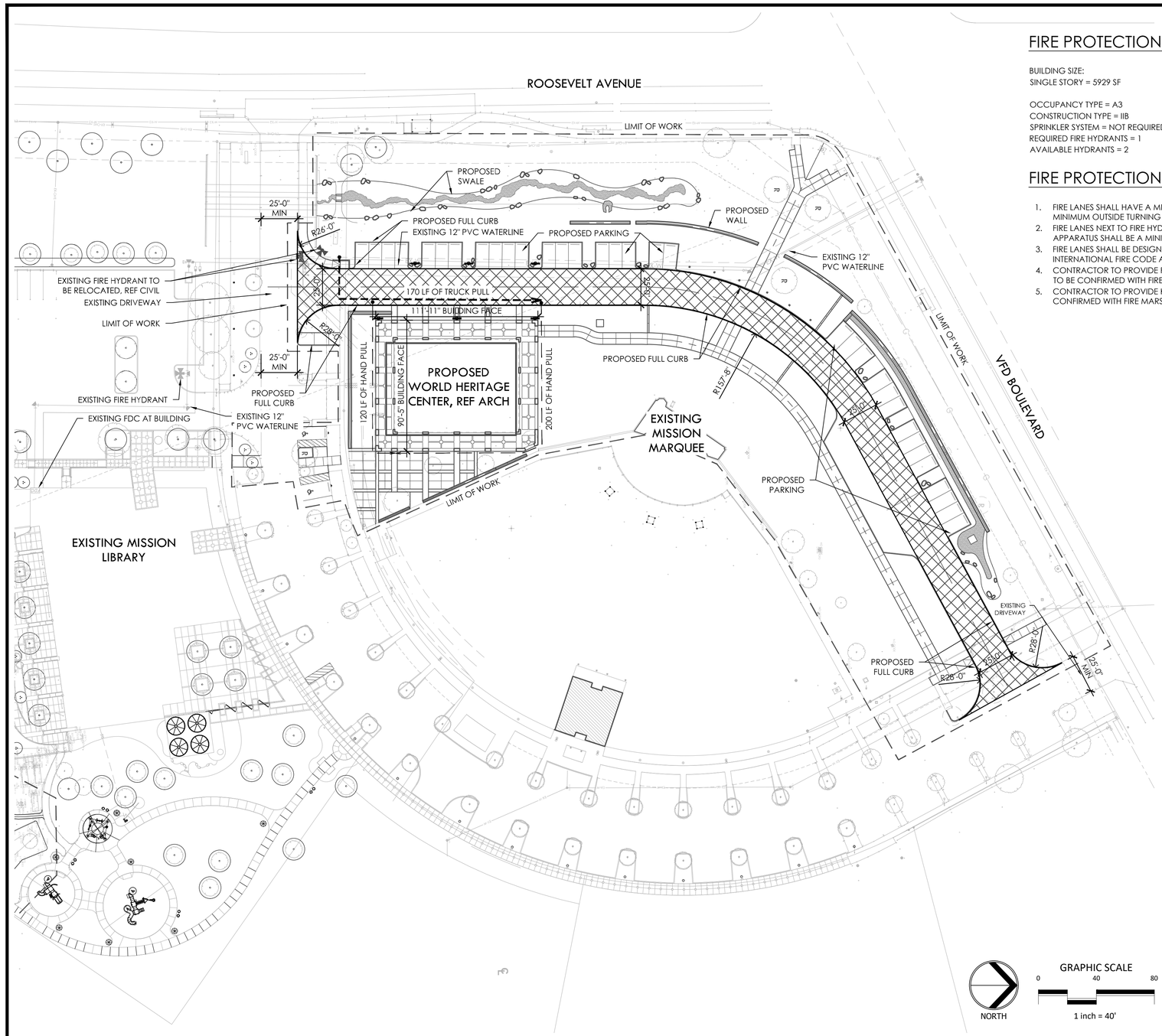

FIRE PROTECTION SUMMARY:

BUILDING SIZE:
SINGLE STORY = 5929 SF

OCCUPANCY TYPE = A3
CONSTRUCTION TYPE = IIB
SPRINKLER SYSTEM = NOT REQUIRED/NOT PROVIDED
REQUIRED FIRE HYDRANTS = 1
AVAILABLE HYDRANTS = 2

FIRE PROTECTION GENERAL NOTES:

1. FIRE LANES SHALL HAVE A MINIMUM 2-WAY TRAFFIC WIDTH OF 25 FT WITH A MINIMUM OUTSIDE TURNING RADIUS OF 50 FT, UNLESS OTHERWISE NOTED.
2. FIRE LANES NEXT TO FIRE HYDRANTS OR DESIGNATED FOR AERIAL APPARATUS SHALL BE A MINIMUM 26 FT.
3. FIRE LANES SHALL BE DESIGNATED IN ACCORDANCE TO THE LATEST INTERNATIONAL FIRE CODE AND PER APPLICABLE LOCAL AMENDMENTS.
4. CONTRACTOR TO PROVIDE FIRE LANE SIGNS, LOCATION AND QUANTITY TO BE CONFIRMED WITH FIRE MARSHALL.
5. CONTRACTOR TO PROVIDE KNOX BOXES, LOCATION AND QUANTITY TO BE CONFIRMED WITH FIRE MARSHALL.

LEGEND

PROPERTY LINE
LIMIT OF WORK
DRIVE CENTER LINE
HAND PULL FIRE HOSE — 200 FT MAX
TRUCK PULL FIRE HOSE — 550 FT MAX
FIRE LANE
FIRE LANE SIGNAGE

SIGN NOTES:
1. SIGNS SHALL BE STANDARD SIZE 18" X 24" AND HAVE RED LETTERS AND BORDER WHITE BACKGROUND.
2. SIGNS SHALL BE MOUNTED WITH THE BOTTOM EDGE OF THE SIGN AT LEAST SEVEN FEET ABOVE GRADE AND AT LEAST TWO FEET FROM THE CURB EDGE.
3. SIGNS SHALL BE PLACED AS FOLLOWS:
   - 3.1. LESS THAN FORTY FEET: ONE SIGN WITH DOUBLE ARROW.
   - 3.2. FROM FORTY TO NINETY FEET: TWO SIGNS WITH RIGHT AND LEFT ARROWS.
   - 3.3. FROM ONE HUNDRED FEET OR MORE: THREE SIGNS WITH RIGHT/LEFT AND DOUBLE ARROWS IN THE MIDDLE.
   - 3.4. SIGNS TO BE PLACED IN ACCORDANCE WITH THE 2015 INTERNATIONAL FIRE CODE AND SAN ANTONIO'S FIRE CODE AMENDMENTS. THE CONTRACTOR SHALL COORDINATE WITH THE FIRE INSPECTOR FOR APPROVED SIGN LOCATIONS.

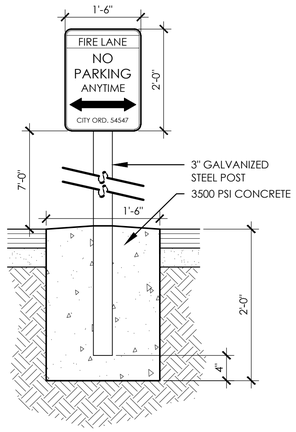

FIRE LANE SIGNAGE

SCALE: NTS

APPLICATION:
1. PAINT A 6" WIDE RED STRIPE LOCATED 3" OFF EDGE OF PAVEMENT WITH 4" WHITE LETTERING ON RED STRIPE.
2. SEE THIS SHEET FOR CURB TYPES AND LOCATIONS.
3. 40 FOOT SPACING BETWEEN THE BEGINNING OF THE WHITE LETTERING.
4. LIMITS OF FIRE LANE STRIPE AS SHOWN ON THE FIRE PROTECTION SITE PLAN.

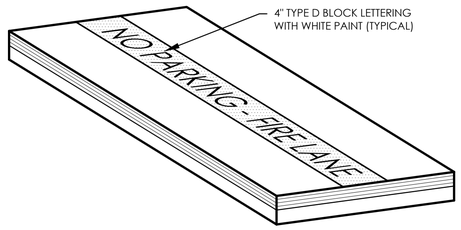

FIRE LANE MARKING

SCALE: NTS

REVISIONS

NO.	DATE	DESCRIPTION

DUNAWAY
118 Broadway • Suite 2014 • San Antonio, Texas 78205
Tel. 210.267.5246
TBPELS F-11148

muñoz
723 S. Flores • San Antonio, Texas 78204
210.349.1163 • www.munoz-co.com

FIRE PROTECTION SITE PLAN

WORLD HERITAGE CENTER
SAN ANTONIO, TEXAS

PRELIMINARY
FOR REVIEW ONLY
These documents are for Design Review and not intended for Construction, Bidding or Permit Purposes. They were prepared by, or under the supervision of:
Bryan Kye Mask
L.A.# 2369

JOB NO.	5675.001
DESIGNED BY:	TLL
DRAWN BY:	MMP
CHECKED BY:	BKM
DATE:	12/01/2021
SHEET:	FPSP

FILE PATH: G:\Production\4000\05600\5675\01\01\Admin\95% CD\Plot Sheets\Production\4000\05600\5675\01\01\Admin\95% CD\Plot Sheets\5675.001 Fire Protection Plan

FILENAME: 5675.001 Fire Protection Plan.dwg
PLOTTED BY: Damaris Alarcon
PLOTTED ON: Thursday, December 02, 2021
PLOTTED AT: 4:09:59 PM
PLOTTED WITH: DWG To Pdf.pc3